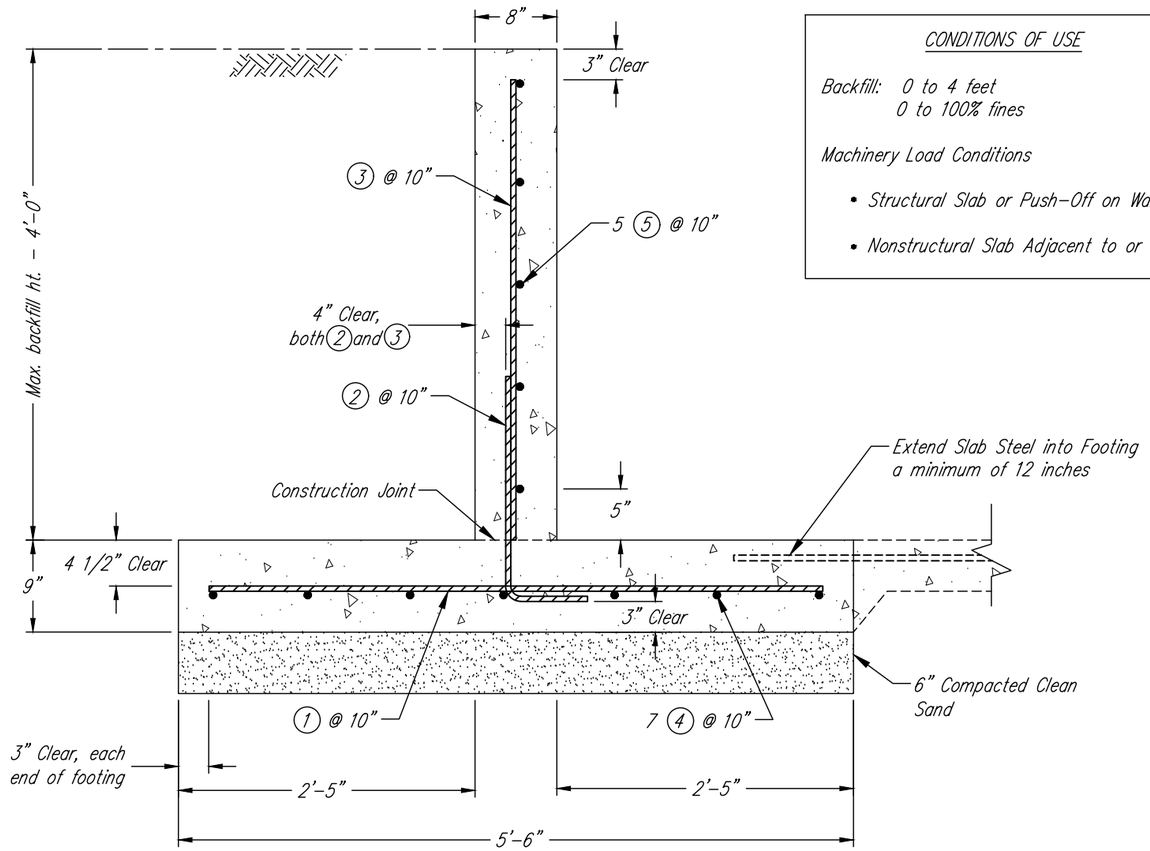

WALL SECTION

CONDITIONS OF USE

Backfill: 0 to 4 feet
0 to 100% fines

Machinery Load Conditions

- Structural Slab or Push-Off on Wall
- Nonstructural Slab Adjacent to or on Wall

Design Values

- Earth Backfill: 85 psf/ft. Equivalent Fluid Pressure
  110 pcf (Soil Weight) and > 50% Fines
- Manure: 65 psf/ft., Equivalent Fluid Pressure
- Machinery Loading: 0 psf Equiv. Fluid Pressure
- Ultimate Strength Design (ACI 318-05)
- Concrete Strength: 3,500 psi Rebar: Grade 60
- Coeff. Friction (Soil/Concrete) = 0.43
- Minimum Sliding Factor of Safety = 1.5 (Additional Restraint May be Needed)
- Wall Sliding Restraint Required
- Minimum Overturning Factor of Safety = 2.0
- Min. Allowable Subgrade Bearing Capacity = 2000 psf
- Vertical Wall load for Slabs Bearing on Wall or Pushoffs = 1000 lbs./ft.
- Not Designed to Support Buildings or Roofs
- Maximum unjointed wall length = 60 ft.

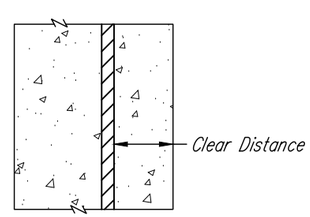

Clear distance is the space measured from side of rebar closest to the form to inside of form

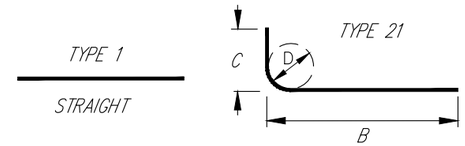

Bar Size	Bend Diameter (D) Inches	Splice Length Inches (min.)
#4	3	16

BAR SCHEDULE

MARK	SIZE	QUANTITY	LENGTH	TOTAL LENGTH	TYPE	B	C	LOCATION
1	#4		5'-0"		1			Footing
2	#4			2'-4"	21	1'-10"	8"	Wall/Footing
3	#4			3'-9"	1			Wall
4	#4				1			Floor
5	#4				21		12"	Wall
6	#4			4'-0"	21	2'-0"	2'-0"	Wall

Lineal Feet of Wall

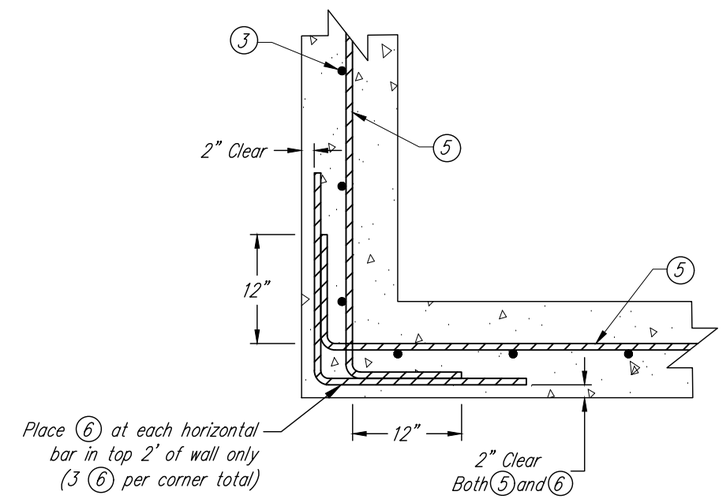

CORNER BAR SCHEMATIC

Plan View - Top 2 Feet of Wall Shown

CORNER NOTES

1. Place first vertical bar at wall corner or no further than one-half bar spacing from the inside corner.
2. Hook can be separate from 5, provided that minimum lap splice of 16" for #4 bars is met.
3. See wall section for exact locations of 3 and 5.

Reset Form

MICHIGAN ENGINEERING STANDARD DRAWING	
FILE NAME MI-617-B4 6-12.dwg	
STANDARD DWG. NO. MI-617-B4	
DATE 6-12	SHEET 1 OF 1

Dimensions in Inches or Feet

Not to Scale

Date
Designed
Drawn
Checked
Approved

4-FOOT TEE WALL

Township, T. -R Sec.
Co., Michigan

United States Department of Agriculture
Natural Resources Conservation Service

File Name
MI-617-B4 6-12

Drawing Name

Sheet of