CONSTRUCTION DATA

Layout by _____ Date _____

Contractor _____ Completed Date _____

Practice (does)(does not) meet standards and specifications

Checked by _____ Date _____

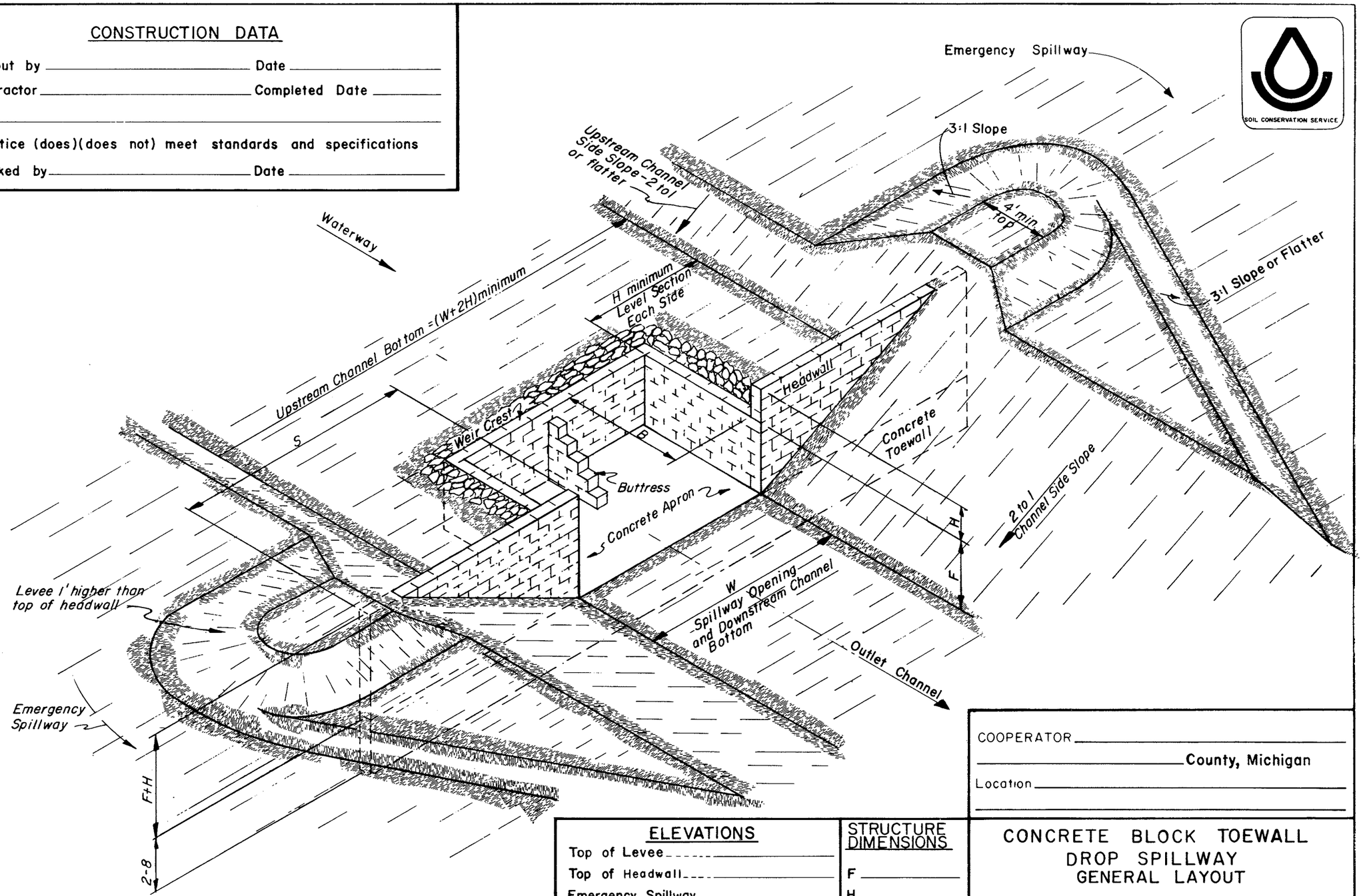

COOPERATOR _____

_____ County, Michigan

Location _____

ELEVATIONS	STRUCTURE DIMENSIONS
Top of Levee _____	F _____
Top of Headwall _____	H _____
Emergency Spillway _____	W _____
Weir Crest _____	B _____
Concrete Apron _____	S _____

BENCH MARK

Elevation _____

Description: _____

CONCRETE BLOCK TOEWALL DROP SPILLWAY GENERAL LAYOUT

U. S. DEPARTMENT OF AGRICULTURE
SOIL CONSERVATION SERVICE

Designed _____ Date _____

Drawn _____

Adapted _____

Checked _____

Approved by Loren L. Dahl

Title State Cons. Eng.

Title _____

Sheet No. _____ of _____

Drawing No _____

Based on original design by C. C. Belcher 9-61

Adapted from Indiana Drwg. 5, 0-32,721-P Sheets 1 thru 3 of 3

Not to Scale

MICH. STD DRWG. SO-N-0320 Sheet 1 of 3

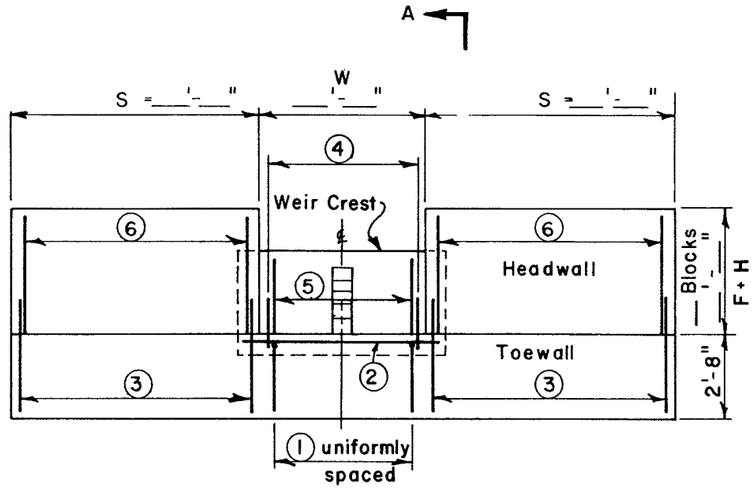

DOWNSTREAM ELEVATION

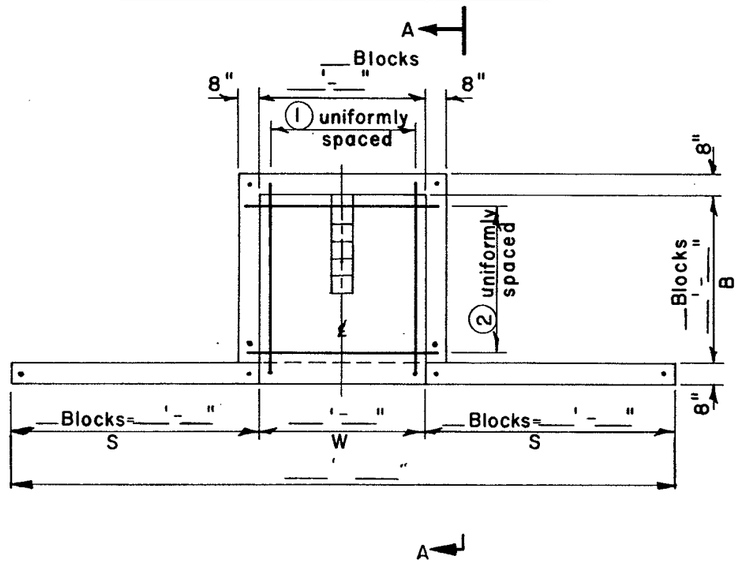

PLAN

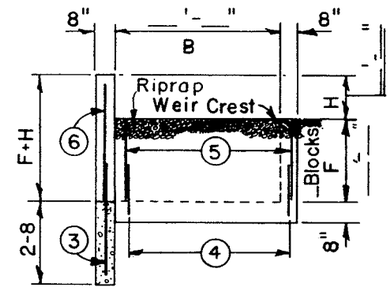

SECTION A-A

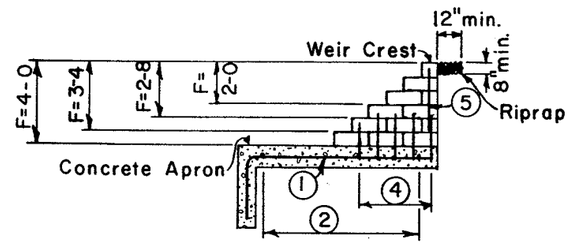

SECTION ON CENTERLINE

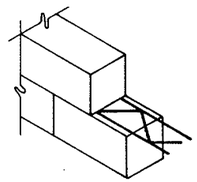

MASONRY WALL REINFORCING

9 gage galvanized wire, 6" width

Place between each course of blocks.

NOTES:

1. BUTTRESS IS NOT REQUIRED WHEN W IS LESS THAN 12-0.
2. ALL REINFORCING STEEL, EXCEPT 1 AND 2, SHALL BE PLACED AT 8" SPACING.
3. CONCRETE SHALL HAVE A MINIMUM COMPRESSIVE STRENGTH AT 28 DAYS EQUAL TO 3000 P.S.I. (6-BAG MIX).
4. RIPRAP MAY CONSIST OF WELL-GRADED ROCK, MAXIMUM SIZE 6", OR 8" CONCRETE BLOCK SET WITH CORE OPENINGS UP AND FILLED WITH SOIL.

Not to Scale

COOPERATOR _____

_____ County, Michigan

CONCRETE BLOCK TOEWALL DROP SPILLWAY STRUCTURE DETAILS

U. S. DEPARTMENT OF AGRICULTURE
SOIL CONSERVATION SERVICE

	Date		
Designed		Approved by	
Drawn		Title	
Adapted		Title	
Checked		Sheet No of	Drawing No

QUANTITIES

ITEM	QUANTITY	UNIT
CONCRETE BLOCKS (8" X 8" X 16") - 2-HOLE		EACH
MORTAR (FOR LAYING BLOCKS - 0.001/BLK.)		CU.YD.
CONCRETE (FILL BLOCK HOLES - 0.014/BLK.)		CU.YD.
CONCRETE (APRON AND TOEWALL)		CU.YD.
MASONRY WALL REINFORCING - 6" WIDTH		LIN.FT.
#___(__" DIA.) REINFORCING STEEL		LIN.FT.
RIPRAP (0.03 X L CU.YD.) (L=W+2B+2.67')		CU.YD.
SITE PREPARATION		
EXCAVATION AND BACKFILL		CU.YD.
DRAIN TILE OUTLET ___" DIAMETER	10	LIN.FT.

REINFORCING STEEL SCHEDULE

MARK	QUANTITY	LENGTH	TOTAL
1			
2			
3			
4			
5			
6			
Total Lin. Ft.			

NOTES

1. ALL REINFORCING STEEL SHALL BE #___(__" DIA.).
2. ALL REINFORCING STEEL SHALL BE STRAIGHT BARS EXCEPT MARK 1, WHICH SHALL BE BENT:

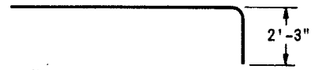

CONSTRUCTION NOTES

1. EXCAVATE FOR APRON AND TOEWALL IN UNDISTURBED SOIL. SIDE SLOPES ABOVE THE TOP OF APRON AND TOEWALL SHALL BE 1:1 OR FLATTER.
2. PLACE REINFORCING BARS 1 AND 2 BEFORE POURING CONCRETE IN APRON AND TOEWALL.
3. LAY FIRST COURSE OF CONCRETE BLOCKS IN FRESHLY POURED CONCRETE OF APRON AND TOEWALL.
4. PLACE VERTICAL STEEL BARS 3 AND 4 INTO WET CONCRETE THRU HOLES IN CONCRETE BLOCKS SO THAT THEY PROJECT ABOVE THE FIRST COURSE OF CONCRETE BLOCKS AS FOLLOWS:

F-	3	4
2-0	7"	13"
2-8	7"	21"
3-4	7"	7"
4-0	11"	11"

5. AFTER CONCRETE HAS SET, PLACE DRAIN TILE OUTLET PIPE, IF REQUIRED.
6. LAY BALANCE OF CONCRETE BLOCKS. USE ONE PART CONCRETE AND THREE (3) PARTS SAND FOR MORTAR. PLACE MASONRY WALL REINFORCING BETWEEN EACH COURSE OF BLOCKS.
7. AFTER BLOCKS ARE LAID, WET DOWN HOLES. PLACE STEEL BARS 5 AND 6 IN WALLS THRU HOLES IN BLOCKS AND FILL HOLES WITH CONCRETE. TAMP CONCRETE WELL INTO HOLES THRU MASONRY REINFORCING SO THAT ALL HOLES ARE FILLED.
8. AFTER MORTAR AND CONCRETE HAVE SET, LAY DRAIN TILE TO TILE OUTLET PIPE, IF REQUIRED, AND BACKFILL AROUND STRUCTURE WITH MOIST SOIL. PLACE BACKFILL IN SHALLOW LAYERS AND TAMP WELL. REMOVE DRY SOIL FROM SIDES OF EXCAVATION AS BACKFILL IS PLACED SO THAT MOIST SOIL IS TAMPED AGAINST MOIST SOIL. KEEP BACKFILL APPROXIMATELY LEVEL AROUND ALL PARTS OF THE STRUCTURE.
9. PLACE RIPRAP AND COMPLETE SHAPING AND GRADING.
10. SEED ALL DISTURBED AREAS.

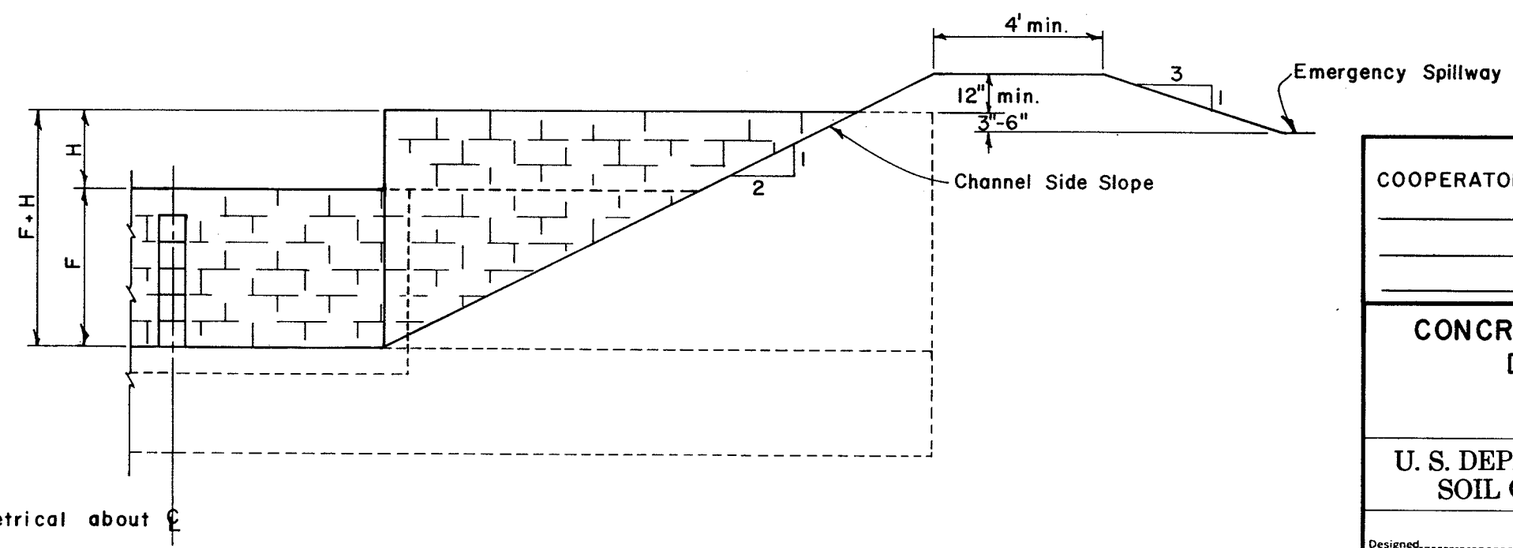

HALF DOWNSTREAM VIEW

Not to Scale

COOPERATOR _____

_____ County, Michigan

CONCRETE BLOCK TOEWALL DROP SPILLWAY DETAILS

U. S. DEPARTMENT OF AGRICULTURE
SOIL CONSERVATION SERVICE

	Date		
Designed		Approved by	
		Title	
Drawn		Title	
Adapted		Sheet No of	Drawing No
Checked			