Instructions for use of OH-N-531-CAD

- This is the Ohio Plank Wall Standard Drawing. Updated/redrawn by Greg Wells in April 2014. Title Block information was removed for posting to the web site in June 2015.

- This drawing is intended to be used in conjunction with OH-N-203-CAD (Concrete Slab Details).

- The drawing contains several layout tabs, which can be selected to fit your situational need.

- The first "Basic Layout" contains all the necessary Plank Wall Details, with an open/blank area at the lower right corner of the drawing. This area is reserved for a plan view of your specific post layout or can be used for other details as needed.

- The "Layout w Drain" tab contains all the Plank Wall Details and the lower right corner shows a detail for installing a perimeter drain around the structure to address high water table. This detail also shows backfill to 2/3 of wall height.

- The "Layout w Gate" tab contains all the Plank Wall Details and the lower right corner shows the standard detail for a manure storage gate. This would be used on structures built with all four sides enclosed with plank walls and an opening(s) for entrance to the structure for manure removal.

- The "Layout w Picket" tab contains all the Plank Wall Details and the lower right corner shows the standard detail for a picket type wall, used for bleeding liquid from the storage.

- The last two layouts show the Manure Gate and Picket Wall details separate from the rest of the drawings. The two details are available from the CADalog as details to be used in other drawings as needed.

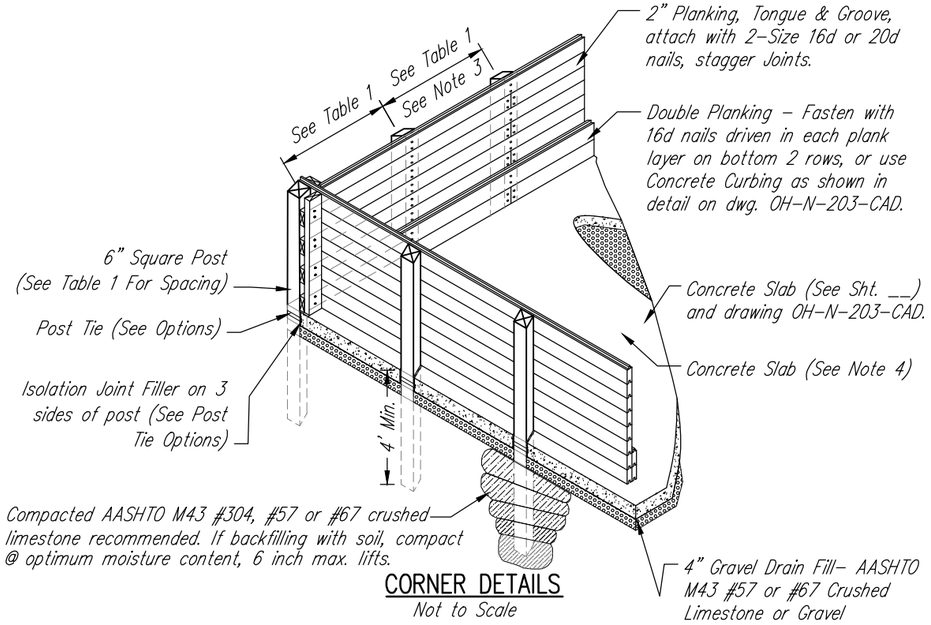

CORNER DETAILS

Not to Scale

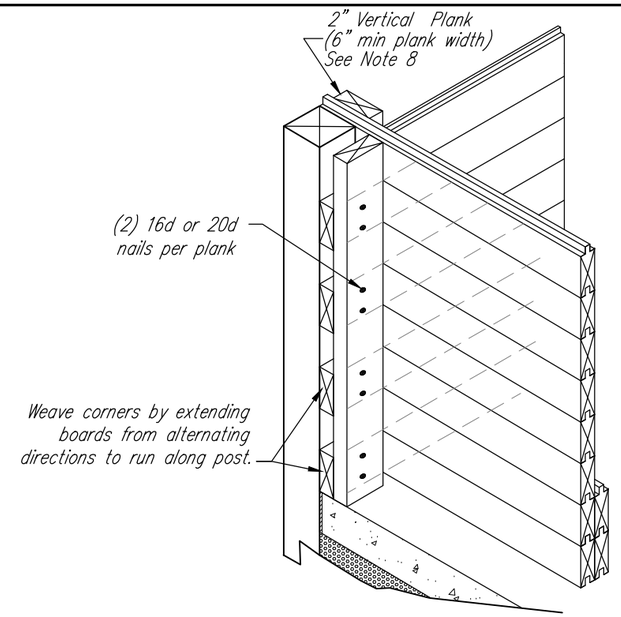

CLOSE UP - ORTHO VIEW - CORNER

Not to Scale

TABLE 1 - MAXIMUM WALL HEIGHT FACILITIES WITHOUT A ROOF			Select Scenario to Use: (X)
MAXIMUM POST SPACING	MAXIMUM WALL HEIGHT, h (FT.)		
6"x 6" No. 1 & 6"x 8" No. 2	Manure*	Compost*	
2.5	5.5	5.5	
3.0	5.0	5.5	
4.0	4.5	5.5	
4.5	4.0	5.5	
5.0	3.5	5.5	
6.0	2.5	4.5	
6" x 6" No. 2	Manure*	Compost*	
2.5	4.7	5.5	
3.5	4.5	5.0	
4.0	4.0	5.0	
4.5	4.0	4.5	
5.0	3.5	4.5	
6.0	2.5	4.0	

* Note: Manure loading = 60 lbs./ Cu.Ft.
Compost loading = 35 lbs./Cu.Ft.

* Note: For roofed structures, maximum wall heights are as follows:

	Manure	Compost
For roof spans ≤32'	4.5'	5.5'
For roof spans >32'	4.0'	5.0'

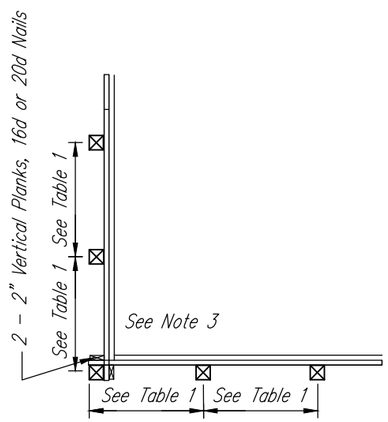

TOP VIEW

Not to Scale

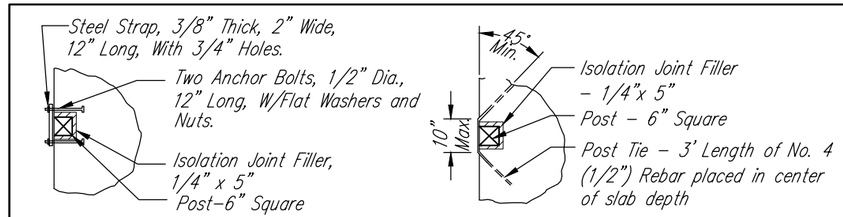

ANCHOR TIE OPTION

REBAR TIE OPTION

Post Tie Option is not required for roof-supporting posts.

POST TIE OPTIONS

Not to Scale

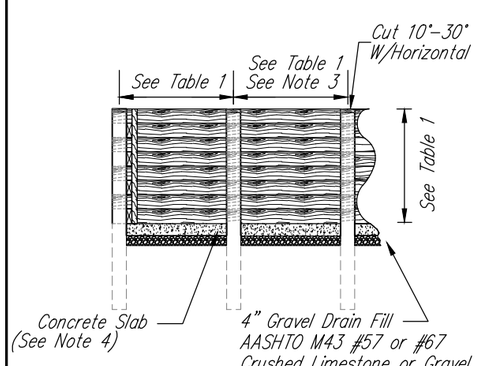

SIDE VIEW

Not to Scale

CONSTRUCTION NOTES:

1. All posts shall be grade stamped No. 2 or better (See Table 1), 0.6 Pounds per Cubic Foot retention Chromated Copper Arsenate (0.6 PCF CCA), Southern Yellow Pine (S.Y.P.). [All other lumber No. 2 or better, S.Y.P., 0.4 PCF CCA., and all fasteners shall be galvanized.]
2. If any other ACQ or MCQ type Preservative Treatment is used, then retention rates shall be the equivalent as for CCA, but all fasteners shall be hot dipped galvanized or stainless steel.
3. Table 1 is for solid tongue and groove plank walls, manure loading at 60 PCF and compost at 35 PCF. Any changes must be approved by the State Conservation Engineer.
4. See NRCS "Concrete" Construction Specification, 210-VI-Engineering Field Handbook, Exhibit OH17-1 for concrete slab requirements.
5. Maximum inside height of wall shall be 5.5 feet. Back fill optional, maximum height = 2/3h.
6. Post ties are not required when back filling to 2/3 the wall height, h. Post ties are required on all wall posts, included corner posts.
7. All plank joints shall be 2" nominal thickness, stagger joints.
8. For corner assembly, saw tongue off horizontal planks to merge at post. Vertical plank width shall match width dimension of adjacent post.
9. Isolation joints shall be used where newly poured concrete abuts existing concrete or abuts to a different, non-yielding structure or material (e.g. buildings, or posts).
10. When using pneumatic nailing guns, the pneumatic equipment and equivalent nail sizes shall be approved by the NRCS engineer prior to use.

POST LAYOUT

Scale 1"=___'

REVISIONS		
DATE	APPROVED	TITLE
04/04	A.M. Brate	State Cons. Engineer
06/15	B.D. Jordan	St. Cons. Eng. (Acting)

Date

Designed

Drawn

Checked

Approved

CLIENT: _____ County, Ohio

_____ Township

PLANK WALL DETAILS

United States Department of Agriculture

Natural Resources Conservation Service

File No.

Drawing No. OH-N-531-CAD

Sheet of

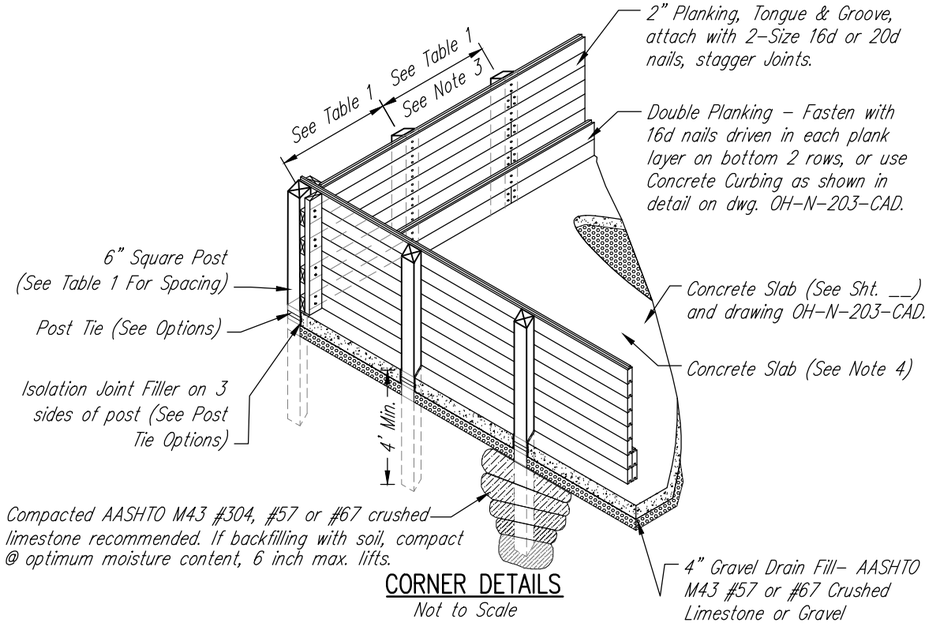

CORNER DETAILS

Not to Scale

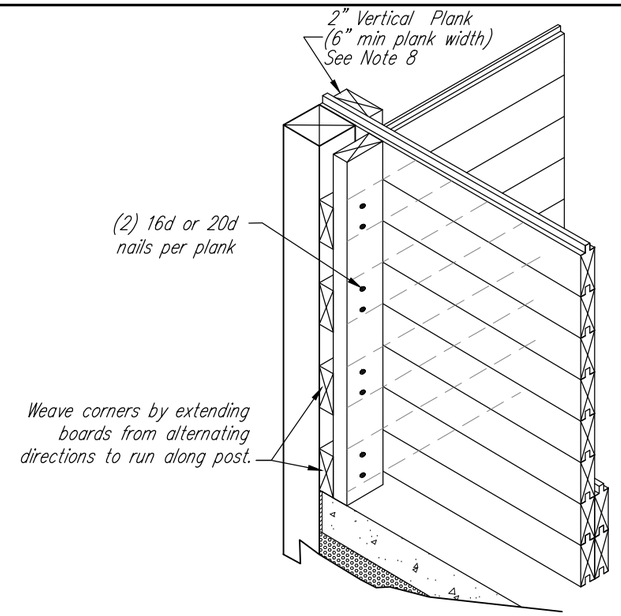

CLOSE UP - ORTHO VIEW - CORNER

Not to Scale

TABLE 1 - MAXIMUM WALL HEIGHT FACILITIES WITHOUT A ROOF			Select Scenario to Use: (X)
MAXIMUM POST SPACING 6"x 6" No. 1 & 6"x 8" No. 2	MAXIMUM WALL HEIGHT, h (FT.)		
	Manure*	Compost*	
2.5	5.5	5.5	
3.0	5.0	5.5	
4.0	4.5	5.5	
4.5	4.0	5.5	
5.0	3.5	5.5	
6.0	2.5	4.5	
6" x 6" No. 2	Manure*	Compost*	
2.5	4.7	5.5	
3.5	4.5	5.0	
4.0	4.0	5.0	
4.5	4.0	4.5	
5.0	3.5	4.5	
6.0	2.5	4.0	

* Note: Manure loading = 60 lbs./ Cu.Ft.
Compost loading = 35 lbs./Cu.Ft.

* Note: For roofed structures, maximum wall heights are as follows:

	Manure	Compost
For roof spans <32'	4.5'	5.5'
For roof spans >32'	4.0'	5.0'

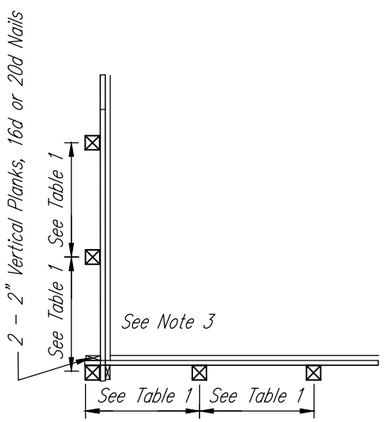

TOP VIEW

Not to Scale

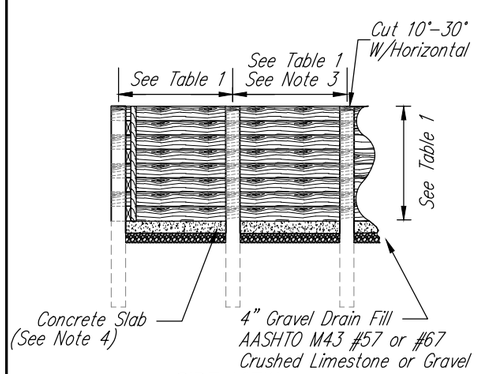

SIDE VIEW

Not to Scale

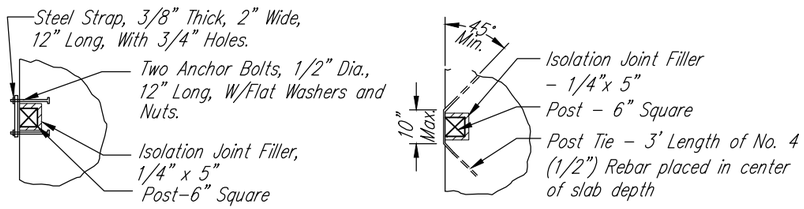

ANCHOR TIE OPTION

REBAR TIE OPTION

Post Tie Option is not required for roof-supporting posts.

POST TIE OPTIONS

Not to Scale

CONSTRUCTION NOTES:

1. All posts shall be grade stamped No. 2 or better (See Table 1), 0.6 Pounds per Cubic Foot retention Chromated Copper Arsenate (0.6 PCF CCA), Southern Yellow Pine (S.Y.P.). [All other lumber No. 2 or better, S.Y.P., 0.4 PCF CCA., and all fasteners shall be galvanized.]
2. If any other ACQ or MCQ type Preservative Treatment is used, then retention rates shall be the equivalent as for CCA, but all fasteners shall be hot dipped galvanized or stainless steel.
3. Table 1 is for solid tongue and groove plank walls, manure loading at 60 PCF and compost at 35 PCF. Any changes must be approved by the State Conservation Engineer.
4. See NRCS "Concrete" Construction Specification, 210-VI-Engineering Field Handbook, Exhibit OH17-1 for concrete slab requirements.
5. Maximum inside height of wall shall be 5.5 feet. Back fill optional, maximum height = 2/3h.
6. Post ties are not required when back filling to 2/3 the wall height, h. Post ties are required on all wall posts, included corner posts.
7. All plank joints shall be 2" nominal thickness, stagger joints.
8. For corner assembly, saw tongue off horizontal planks to merge at post. Vertical plank width shall match width dimension of adjacent post.
9. Isolation joints shall be used where newly poured concrete abuts existing concrete or abuts to a different, non-yielding structure or material (e.g. buildings, or posts).
10. When using pneumatic nailing guns, the pneumatic equipment and equivalent nail sizes shall be approved by the NRCS engineer prior to use.

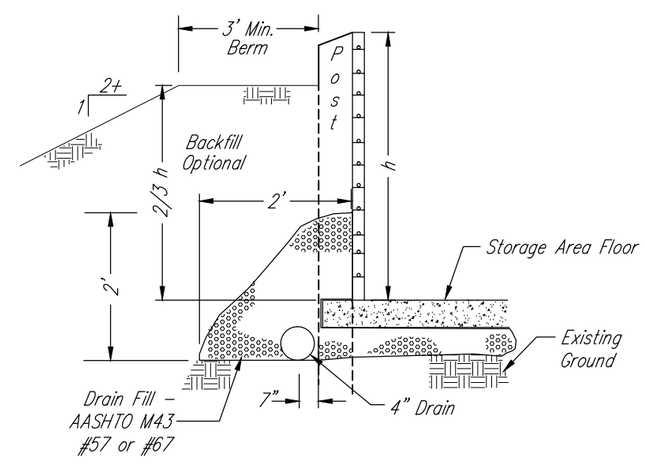

DRAIN DETAIL - AS REQUIRED

Not to Scale

REVISIONS		
DATE	APPROVED	TITLE
04/04	A.M. Brate	State Cons. Engineer
06/15	B.D. Jordan	St. Cons. Eng. (Acting)

Date

Designed

Drawn

Checked

Approved

CLIENT: _____ County, Ohio

_____ Township

PLANK WALL & PERIMETER DRAIN

United States Department of Agriculture

Natural Resources Conservation Service

File No.

Drawing No. OH-N-531-CAD

Sheet of

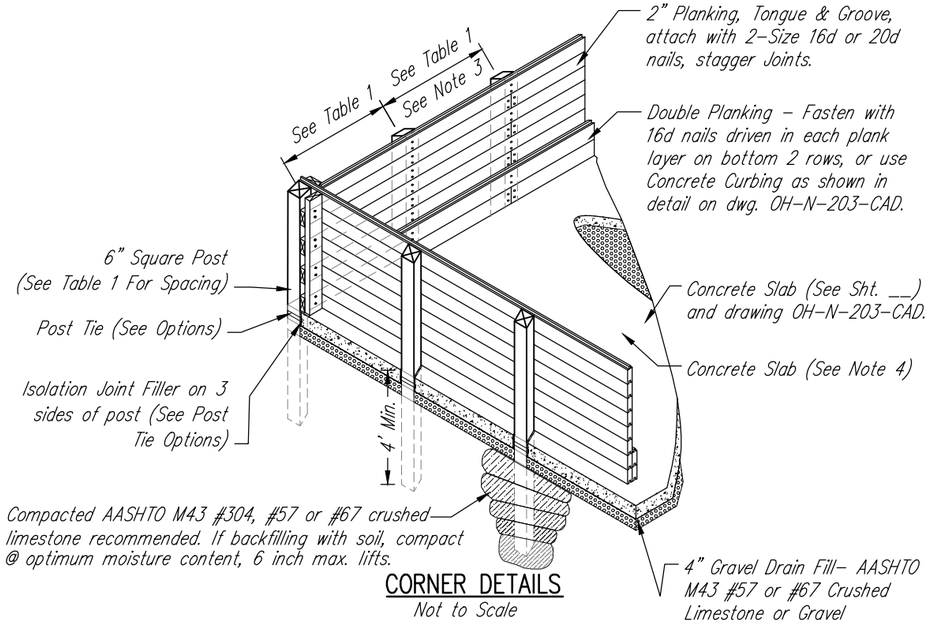

CORNER DETAILS

Not to Scale

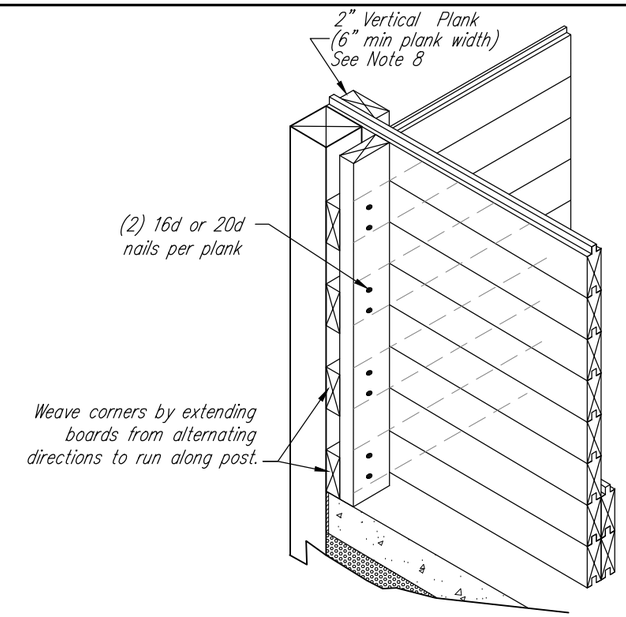

CLOSE UP - ORTHO VIEW - CORNER

Not to Scale

TABLE 1 - MAXIMUM WALL HEIGHT FACILITIES WITHOUT A ROOF			Select Scenario to Use:
MAXIMUM POST SPACING	MAXIMUM WALL HEIGHT, h (FT.)		
6"x 6" No. 1 & 6"x 8" No. 2	Manure*	Compost*	(X)
2.5	5.5	5.5	
3.0	5.0	5.5	
4.0	4.5	5.5	
4.5	4.0	5.5	
5.0	3.5	5.5	
6.0	2.5	4.5	
6" x 6" No. 2	Manure*	Compost*	
2.5	4.7	5.5	
3.5	4.5	5.0	
4.0	4.0	5.0	
4.5	4.0	4.5	
5.0	3.5	4.5	
6.0	2.5	4.0	

* Note: Manure loading = 60 lbs./ Cu.Ft.
Compost loading = 35 lbs./Cu.Ft.

* Note: For roofed structures, maximum wall heights are as follows:

	Manure	Compost
For roof spans ≤32'	4.5'	5.5'
For roof spans >32'	4.0'	5.0'

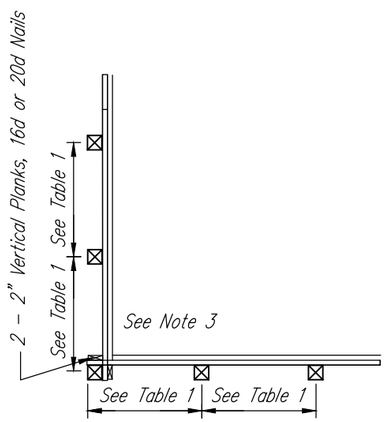

TOP VIEW

Not to Scale

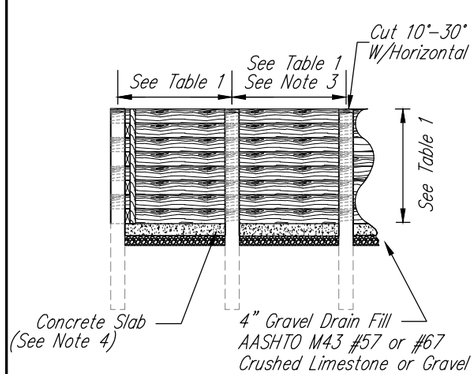

SIDE VIEW

Not to Scale

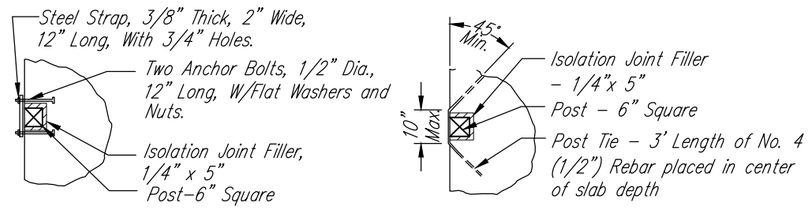

ANCHOR TIE OPTION

REBAR TIE OPTION

Post Tie Option is not required for roof-supporting posts.

POST TIE OPTIONS

Not to Scale

CONSTRUCTION NOTES:

1. All posts shall be grade stamped No. 2 or better (See Table 1), 0.6 Pounds per Cubic Foot retention Chromated Copper Arsenate (0.6 PCF CCA), Southern Yellow Pine (S.Y.P.). [All other lumber No. 2 or better, S.Y.P., 0.4 PCF CCA., and all fasteners shall be galvanized.]
2. If any other ACQ or MCQ type Preservative Treatment is used, then retention rates shall be the equivalent as for CCA, but all fasteners shall be hot dipped galvanized or stainless steel.
3. Table 1 is for solid tongue and groove plank walls, manure loading at 60 PCF and compost at 35 PCF. Any changes must be approved by the State Conservation Engineer.
4. See NRCS "Concrete" Construction Specification, 210-VI-Engineering Field Handbook, Exhibit OH17-1 for concrete slab requirements.
5. Maximum inside height of wall shall be 5.5 feet. Back fill optional, maximum height = 2/3h.
6. Post ties are not required when back filling to 2/3 the wall height, h. Post ties are required on all wall posts, included corner posts.
7. All plank joints shall be 2" nominal thickness, stagger joints.
8. For corner assembly, saw tongue off horizontal planks to merge at post. Vertical plank width shall match width dimension of adjacent post.
9. Isolation joints shall be used where newly poured concrete abuts existing concrete or abuts to a different, non-yielding structure or material (e.g. buildings, or posts).
10. When using pneumatic nailing guns, the pneumatic equipment and equivalent nail sizes shall be approved by the NRCS engineer prior to use.

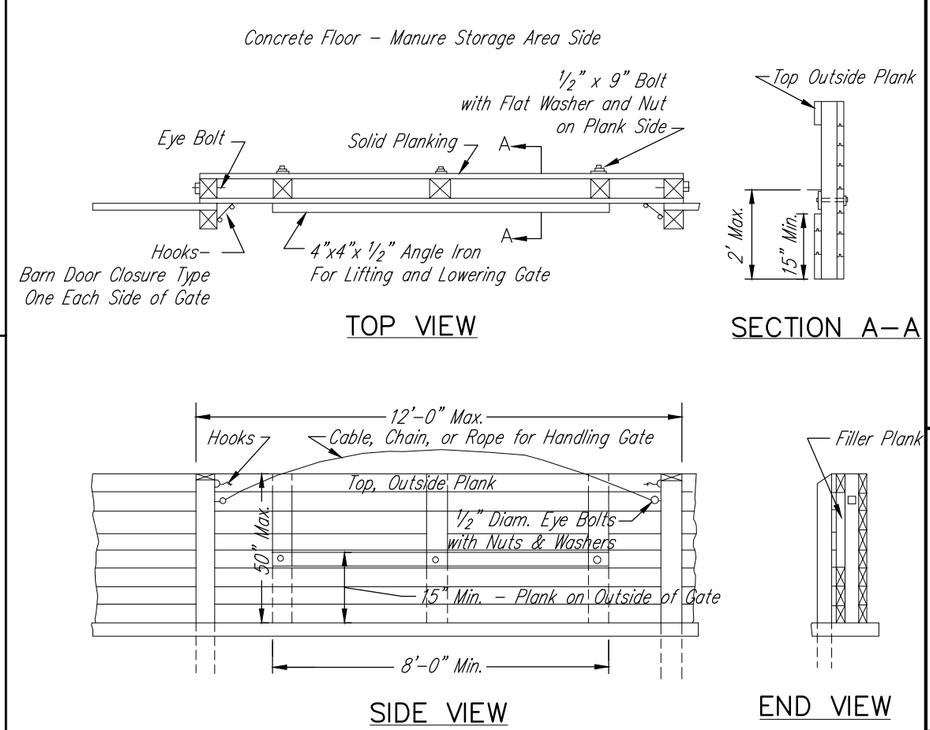

TOP VIEW

SECTION A-A

SIDE VIEW

END VIEW

REMOVABLE GATE - AS REQUIRED

Not to Scale

REVISIONS		
DATE	APPROVED	TITLE
04/04	A.M. Brate	State Cons. Engineer
06/15	B.D. Jordan	St. Cons. Eng. (Acting)

Date

Designed

Drawn

Checked

Approved

CLIENT: _____ County, Ohio

PLANK WALL & GATE DETAIL

_____ Township

United States Department of Agriculture

Natural Resources Conservation Service

File No.

Drawing No. OH-N-531-CAD

Sheet of

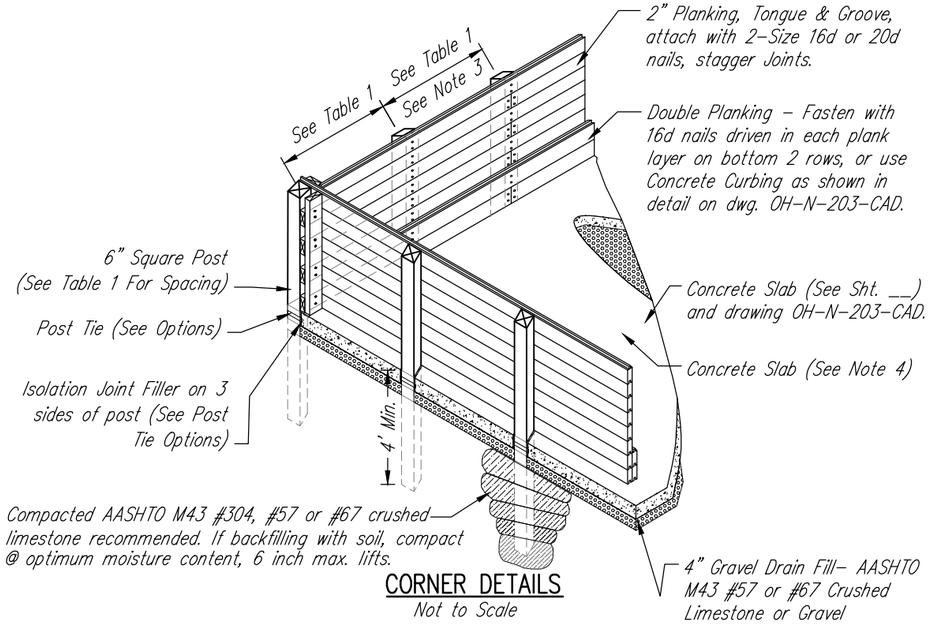

CORNER DETAILS

Not to Scale

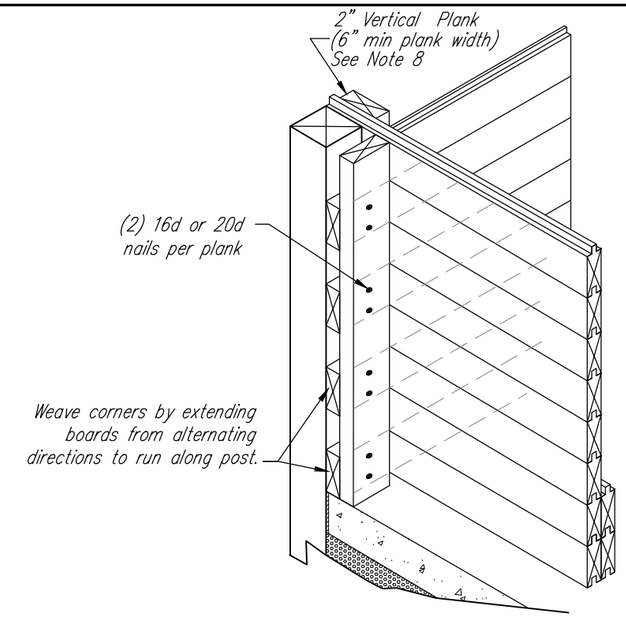

CLOSE UP - ORTHO VIEW - CORNER

Not to Scale

TABLE 1 - MAXIMUM WALL HEIGHT FACILITIES WITHOUT A ROOF			Select Scenario to Use:
MAXIMUM POST SPACING	MAXIMUM WALL HEIGHT, h (FT.)		
6"x 6" No. 1 & 6"x 8" No. 2	Manure*	Compost*	(X)
2.5	5.5	5.5	
3.0	5.0	5.5	
4.0	4.5	5.5	
4.5	4.0	5.5	
5.0	3.5	5.5	
6.0	2.5	4.5	
6" x 6" No. 2	Manure*	Compost*	
2.5	4.7	5.5	
3.5	4.5	5.0	
4.0	4.0	5.0	
4.5	4.0	4.5	
5.0	3.5	4.5	
6.0	2.5	4.0	

* Note: Manure loading = 60 lbs./ Cu.Ft.
Compost loading = 35 lbs./Cu.Ft.

* Note: For roofed structures, maximum wall heights are as follows:

	Manure	Compost
For roof spans ≤32'	4.5'	5.5'
For roof spans >32'	4.0'	5.0'

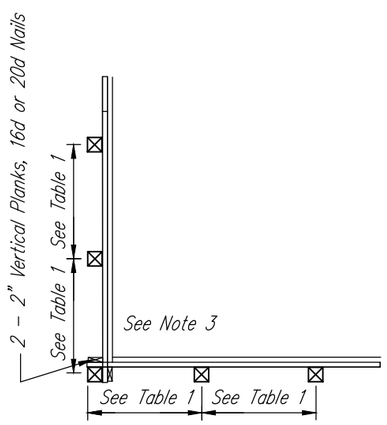

TOP VIEW

Not to Scale

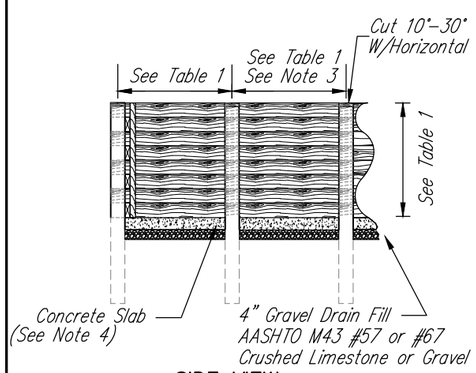

SIDE VIEW

Not to Scale

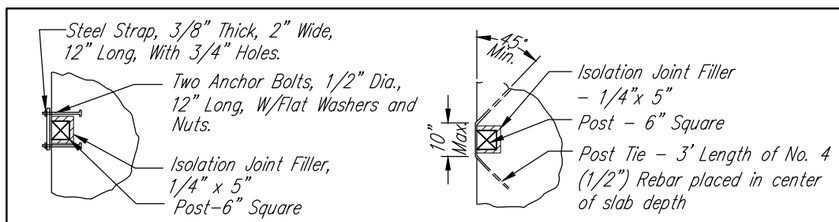

ANCHOR TIE OPTION

REBAR TIE OPTION

Post Tie Option is <u>not</u> required for roof-supporting posts.

POST TIE OPTIONS

Not to Scale

CONSTRUCTION NOTES:

1. All posts shall be grade stamped No. 2 or better (See Table 1), 0.6 Pounds per Cubic Foot retention Chromated Copper Arsenate (0.6 PCF CCA), Southern Yellow Pine (S.Y.P.). [All other lumber No. 2 or better, S.Y.P., 0.4 PCF CCA., and all fasteners shall be galvanized.]
2. If any other ACQ or MCQ type Preservative Treatment is used, then retention rates shall be the equivalent as for CCA, but all fasteners shall be <u>hot dipped</u> galvanized or stainless steel.
3. Table 1 is for solid tongue and groove plank walls, manure loading at 60 PCF and compost at 35 PCF. Any changes must be approved by the State Conservation Engineer.
4. See NRCS "Concrete" Construction Specification, 210-VI-Engineering Field Handbook, Exhibit OH17-1 for concrete slab requirements.
5. Maximum inside height of wall shall be 5.5 feet. Back fill optional, maximum height = 2/3h.
6. Post ties are not required when back filling to 2/3 the wall height, h. Post ties are required on all wall posts, included corner posts.
7. All plank joints shall be 2" nominal thickness, stagger joints.
8. For corner assembly, saw tongue off horizontal planks to merge at post. Vertical plank width shall match width dimension of adjacent post.
9. Isolation joints shall be used where newly poured concrete abuts existing concrete or abuts to a different, non-yielding structure or material (e.g. buildings, or posts).
10. When using pneumatic nailing guns, the pneumatic equipment and equivalent nail sizes shall be approved by the NRCS engineer prior to use.

Notes: See Table at right for Wall Height and Maximum Purlin Spacings. Any changes must be approved by the State Conservation Engineer.
Fasten Planks w/(6) Size 40 (5"Length) Pole Barn Nails.

TABLE - MAXIMUM PURLIN SPACING		
WALL HEIGHT Max. h (FT.)	MAX. PURLIN SPACING (IN.)	
	A	B
5.5	30	20
4.5	24	20
3.5	30	NA

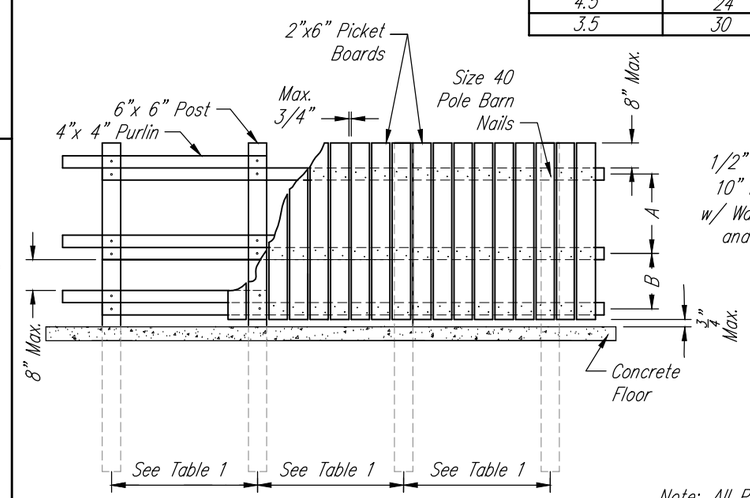

FRONT VIEW
PICKET WALL DETAIL

Not to Scale

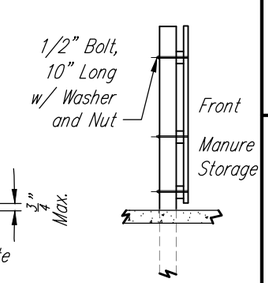

CROSS SECTION

Note: All Purlin Joints Shall be Overlapped by One Post Spacing.

REVISIONS		
DATE	APPROVED	TITLE
04/04	A.M. Brate	State Cons. Engineer
06/15	B.D. Jordan	St. Cons. Eng. (Acting)

Date
Designed
Drawn
Checked
Approved

CLIENT: _____ County, Ohio
_____ Township

PLANK & PICKET WALL DETAILS

United States Department of Agriculture
Natural Resources Conservation Service

File No.

Drawing No. OH-N-531-CAD

Sheet of