United States Department of Agriculture

Natural Resources Conservation Service
359 East Park Drive, Suite 2
Harrisburg, PA 17111

State Technical Committee
AGENDA
Thursday, July 19, 2018

1:00 Welcome – Denise Coleman, State Conservationist

1:10 Promoting Rotational Grazing in PA, MD, and VA and Quantifying the Environmental Benefits
Beth McGee, Chesapeake Bay Foundation

1:40 Integration of Grazing and No-tillage to Improve Soil Health and Add Profitability
Sjoerd Duiker, The Pennsylvania State University

2:10 NRCS Technical Guide Report – Dan Dostie, Pete Vanderstappen

2:20 Easement Programs – Hathaway Jones
- WRP/WRE and ALE Update
- Input from Committee for FY 2019 Ranking

2:35 Financial Programs Update – Susan Kubo
- Input from Committee for FY 2019 Ranking – Susan Kubo
- EQIP Update – Ed Sanders
- CIG and CSP Update – Noel Soto

3:10 Regional Conservation Partnership Program Update – Susan Marquart

3:25 Next State Technical Committee Meeting Tuesday October 16, 2018

Committee Input: Do the State Technical Committee members have any suggestions for topics or agenda items for future meetings?

Dates for 2018 State Technical Committee Meetings:
Tuesday October 16, 2018

Listen in/participate by calling:
Toll free 888-844-9904
Access Code: 6941559

Helping People Help the Land

USDA is an equal opportunity provider, employer, and lender.

Pennsylvania State Technical Committee Meeting

July 19, 2018

Denise Coleman (NRCS) opened the meeting at 1:00 PM and introduced Gary Groves, (FSA) Farm Service Agency State Executive Director and Sonja Jahrsdorfer who is the Project Leader/Supervisor of the US Fish and Wildlife Service, Pennsylvania Field Office at State College, PA. She then acknowledged those partners who were participating by phone Call-In. All included, there were 29 persons in attendance.

<u>Beth McGee (Chesapeake Bay Foundation)</u> was introduced and provided a program concerning Rotational Grazing in Pennsylvania, Maryland and Virginia. Also about Quantifying the Environmental Benefits. (See the attached Hand-out.)

NRCS Conservation Innovation Grant: *Promoting Rotational Grazing in the Chesapeake Bay Watershed and Quantifying the Environmental and Economic Benefits*

Beth McGee
Director of Science and Agricultural Policy
Chesapeake Bay Foundation

Capital RC&D

Supporting Pennsylvania's Heartland!

UNIVERSITY OF MARYLAND EXTENSION

Solutions in your community

FUTURE HARVEST

Chesapeake Alliance for Sustainable Agriculture

MARYLAND GRAZERS NETWORK

red barn

WORLD RESOURCES INSTITUTE

VFGC

CHESAPEAKE BAY FOUNDATION

Saving a National Treasure

Partners

Grant Objectives

- Develop a robust regional network of grazers
- Quantification of environmental and economic benefits of rotational grazing
- Technical assistance and outreach to enroll 35 producers and transition 1,400 acres of farmland to rotational grazing
- Evaluate factors influencing adoption of grazing

MOUNTAINS-TO-BAY GRAZING ALLIANCE

News & Notes from the Mountains-to-Bay Grazing Alliance July 2016

Grazing School Hosted in Virginia

by J.B. Daniel, Forage and Grassland Agronomist, USDA-NRCS

The Virginia Forage and Grassland Council (VFGC) 2016 Grazing School held on May 2 and 3, 2016, was a tremendous success. This two-day intensive learning experience was hosted at the Shenandoah Valley Agricultural Research and Extension Center in Steele's Tavern, Virginia. Thirty-five farmers attended this session from different regions of to develop a plan of action for their personal farm operation. The participants enjoyed meeting each other, interacting with the instructors, and learning the core concepts of forage and grazing management in this interactive and personal setting.

Congratulations to this class of grazing school graduates and we look

- Field days/grazing schools
- Annual grazing planning calendars
- Regional grazing conference
- Electronic newsletter

For more information:
cbf.org/grazing or koneill@cbf.org

Building a robust network

CASE STUDY FARMS

- Quantifying “baseline” and “project” scenarios for 7 farms
  - Greenhouse Gases: COMET-Farm & A-Microscale
  - Water Quality: Chesapeake Bay Nutrient Trading Tool (modified version of NTT)
  - Soil Health: Cornell Soil Health Testing Lab
  - Economics (dairy): UMD Economist

https://cometfarm.nrel.colostate.edu/ActivityType

- COMET-Farm

Water Quality Goal Imple... %22

COMET Farm

USDA United States Department of Agriculture
Natural Resources Conservation Service

Colorado State University

Whole Farm and Ranch
Carbon and Greenhouse Gas
Accounting System.

Step 1
Activities

Select a Project [Create Demo Project]

Existing Projects

- Bomgardner Farm
- Bomgardner Farm_AMcA_CBF
- Fry Farm
- Funkhouser Farm
- **July Bomgardner Farm**
  [delete] [rename]
- Meals Farm
- Open Book Baseline Dairy
- Open Book Farm
- Open Book Farm_AMcA_CBF
- Strite Farm
- Strite Rotational Mgmt
- Walls Farm

Create New Project

Selected Activities for the Current Project:

July Bomgardner Farm

- [ ] All Categories - Full Accounting
  - [x] Cropland, Pasture, Range, Orchards/Vineyards
  - [x] Animal Agriculture
  - [ ] Agroforestry
  - [ ] Forestry

Define Activities >>

What activities do I select?

Choose the management activities you want to investigate. Click on the help box ? next to the activity names to learn more about the activities.

What is a Project?

A project is a set of cropland, livestock, forestry, agroforestry and energy management practices that are unique to a single user. A user may have up to five hundred projects at a time.

What is a Demo Project?

Create a project that has existing data already. This is designed to help you navigate through COMET-Farm.

Greenhouse Gases

http://www.cbntt.org/farms | Waiting for cometfarm.nrel.col... | NutrientNet - Projects

Water Quality Goal Imple... | %22

CHESAPEAKE BAY NUTRIENT TRADING TOOL v. 2

Welcome, Ashley McAvoy Logout | My account | Cost Tool | Help

AGRICULTURAL PROJECT WORKSHEETS

Home » Projects

You are already signed in.

Add new project

Search here | Search

Code	Project Name	Created on	Fields	Status	Actions
PCL-004346	Copy of Blue Mountain Farm	2017-11-15	19	100% complete	
PCL-004527	Copy of July update Blue Mountain Farm	2018-07-10	19	100% complete	
PCL-004419	Copy of Open Book Farm	2018-04-18	14	100% complete	
PCL-004368	Copy of Strite Farm	2018-02-16	17	100% complete	
PCL-004337	Fair Hill Farms (Fry Farm)	2017-11-01	29	100% complete	
PCL-004518	Fair Hill Farms An Ag (Future)	2018-06-19	1	100% complete	
PCL-004457	Fry Farm Animal Ag (Baseline)	2018-05-14	1	100% complete	
PCL-004355	Funkhouser Farm	2017-12-20	3	100% complete	
PCL-004526	July update Blue Mountain Farm	2018-07-02	19	100% complete	
PCL-004463	Meals Confined Herd Baseline	2018-06-08	1	100% complete	

Displaying farms **1 - 10** of **17** in total ← Previous *1* 2 Next →

CHESAPEAKE BAY FOUNDATION

Saving a National Treasure

Nutrient and sediment loads

Group	Indicator	Value	Rating	Constraints
physical	Surface Hardness			Not rated: No Field Penetrometer Readings Submitted
physical	Subsurface Hardness			Not rated: No Field Penetrometer Readings Submitted
physical	Aggregate Stability	**11.4**	**10**	**Aeration, Infiltration, Rooting, Crusting, Sealing, Erosion, Runoff**
biological	Organic Matter	**2.5**	**5**	**Nutrient and Energy Storage, Ion Exchange, C Sequestration, Water Retention**
biological	Soil Respiration	**0.5**	**35**	
chemical	Soil pH	**6.7**	**100**	
chemical	Extractable Phosphorus	**48.2**	**9**	**High Phosphorus, Environmental Impact Risk**
chemical	Extractable Potassium	**291.4**	**100**	
chemical	Minor Elements Mg: 176.1 / Fe: 1.9 / Mn: 16.0 / Zn: 1.6		**100**	

Overall Quality Score: **51** / Medium

PA Case Study Farm 1

- 198 acre dairy farm in PA
- Baseline:
  - 90 acres in cropland – alfalfa, corn, rye
  - 37 acres rotational grazing/pasture
  - Use of manure and fertilizer on all fields
- Project:
  - 40 acres in cropland
  - 87 acres in rotational grazing
  - No commercial fertilizer (transitioned to organic)

Case Study Farm 1 (cont)

- 100 milking cows reduced to 96; roughly 22 dry cows and 50 calves
- Diet transition to more grass, less grain/corn.
- Manure handling: slurry pit; then slurry pit and dry stacking in after scenario.
- Milk production increased in project scenario

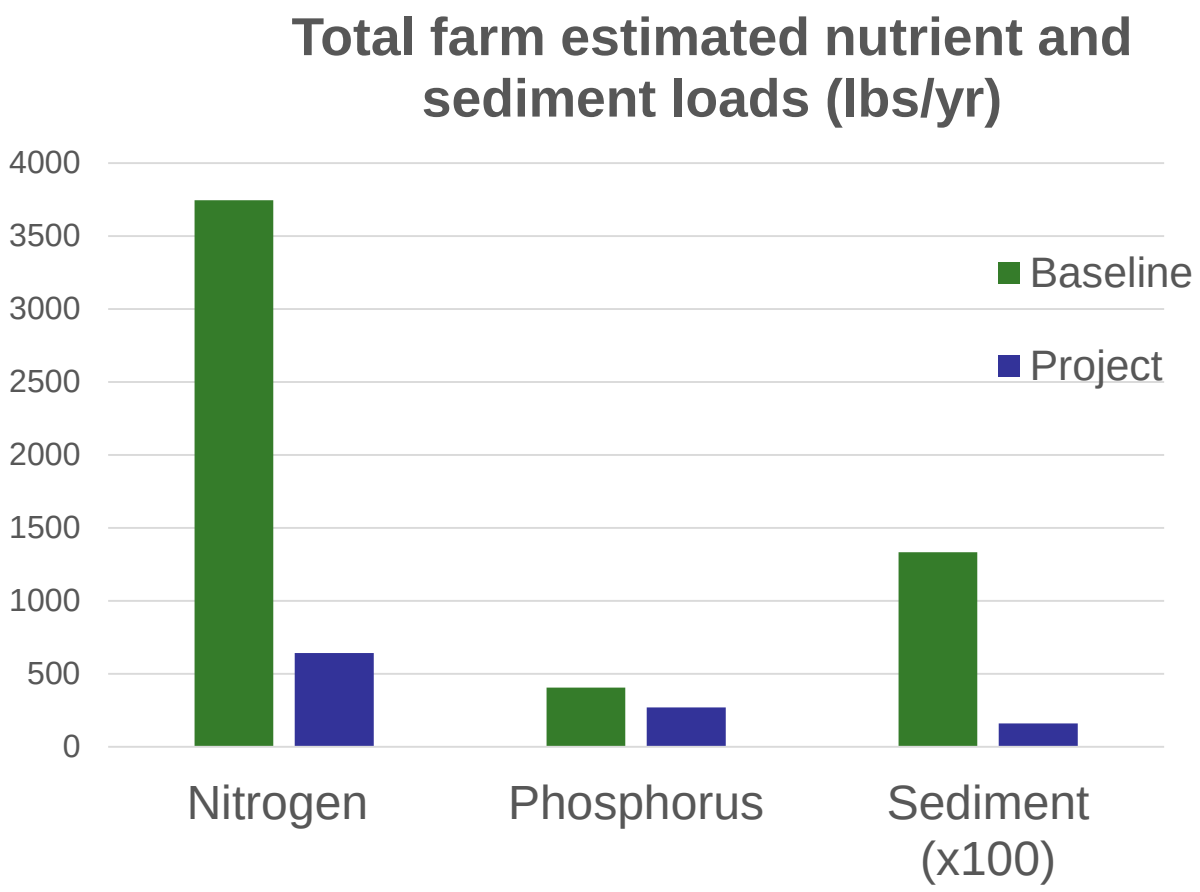

CHESAPEAKE BAY FOUNDATION
Saving a National Treasure

Water Quality Benefits

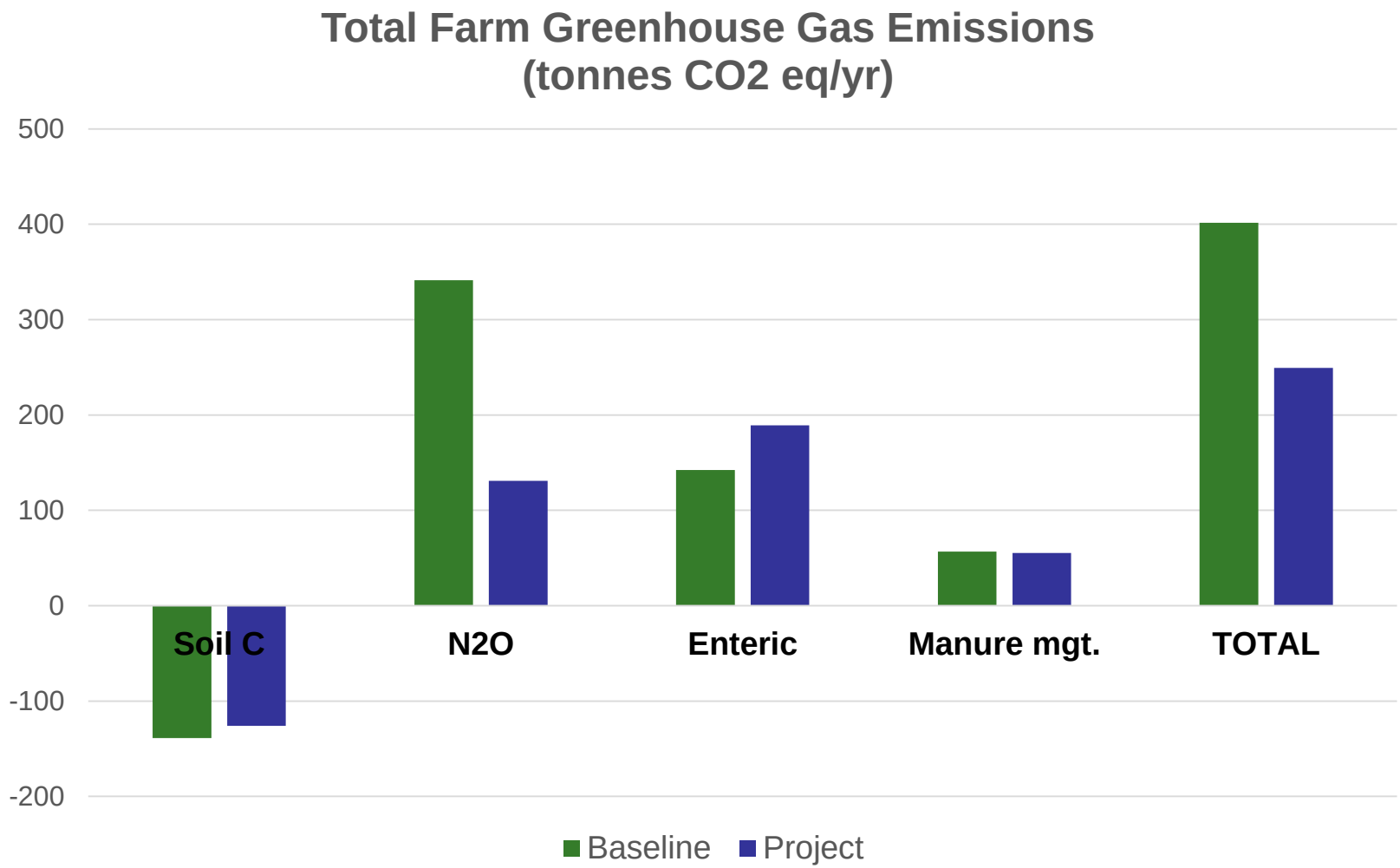

CHESAPEAKE BAY FOUNDATION
Saving a National Treasure

Reduction of 152 T CO2 equiv/year
~ removing 33 cars from the road

- Income
  - Milk sales
  - Crop sales
  - Cattle sales

- Expenses
  - Car/truck
  - Freight/trucking
  - Employee benefits
  - Fertilizer/lime/chem
  - Vet/medicine
  - Custom hire
  - Depreciation
  - Repairs/maintenance
  - Feed
  - Fuel/gas
  - Insurance
  - Utilities
  - Seeds
  - Taxes
  - Supplies

Comparison of farm to averages of non-organic and organic farms in all categories per cow and cwt as well as net profit per cow, cwt and acre.

Economics

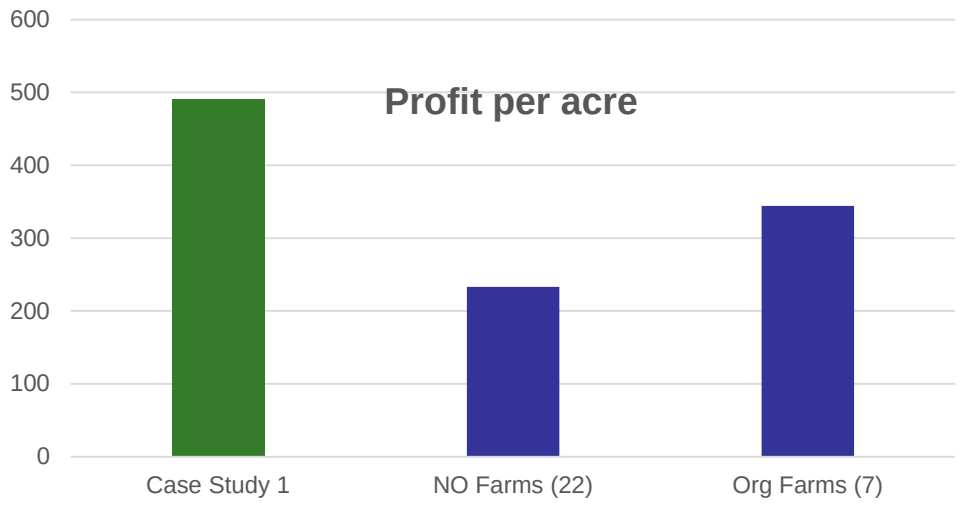

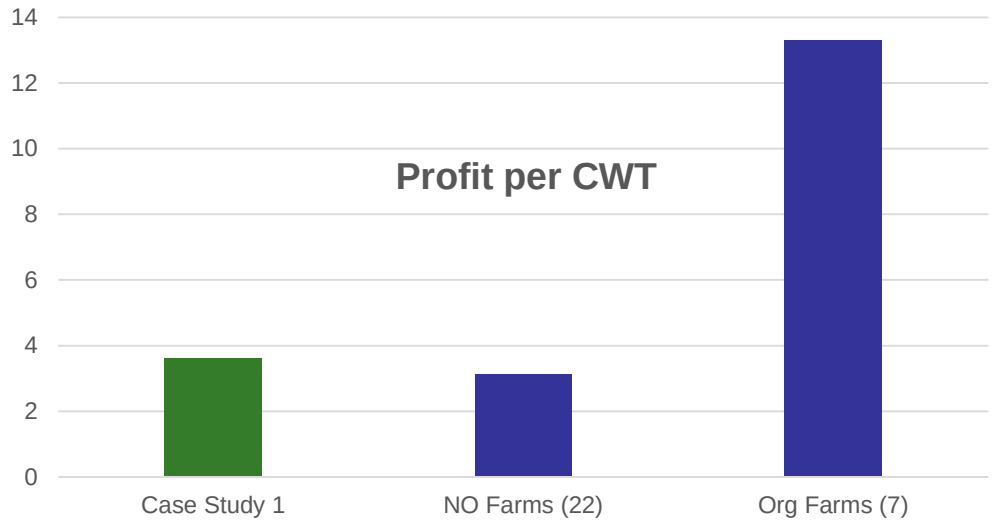

CHESAPEAKE BAY FOUNDATION
Saving a National Treasure

Economics

MD Case Study Farm Cropland to Pasture:

~ 0.7 % increase in OM and doubling of WAS

Results could be confounded by season/weather

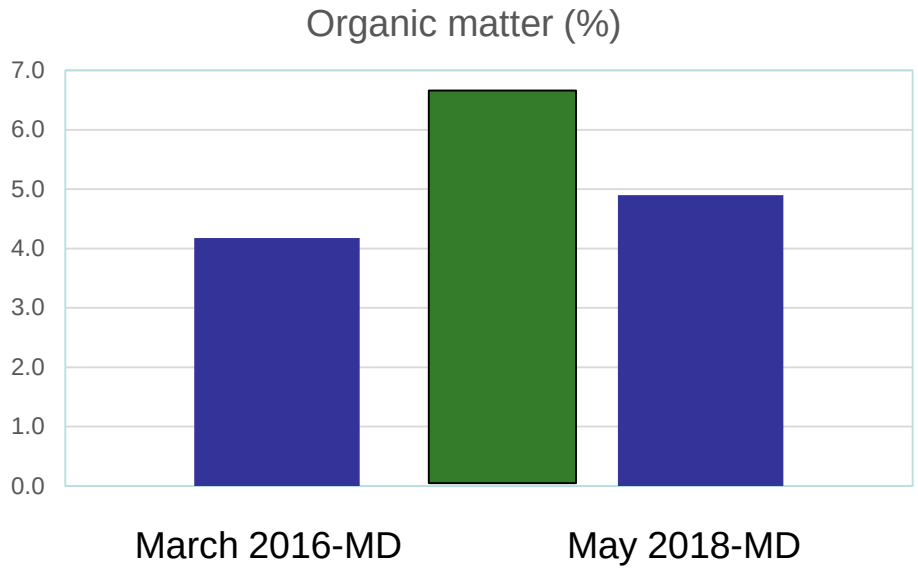

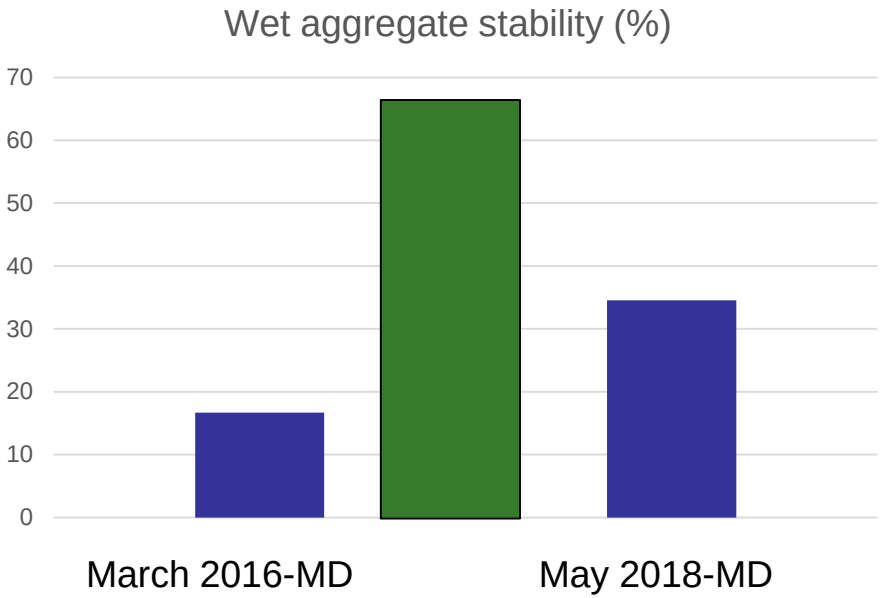

Progress on Converted Acres

- To date, 900 of 1400 acres converted
- Leveraged the CIG to secure a $1M 2017 MD RCPP focused on rotational grazers
- Leveraged CBF's "Carbon Reduction Fund" to convert farmland in MD and VA
-

ADOPT –
Adoption and Diffusion Outcome Prediction Tool

Developed by Australian Scientists at the
Commonwealth Scientific and Industrial Research Organisation
(CSIRO) https://research.csiro.au/software/adopt/

Kuehne, et al. 2017. Predicting farmer uptake of new agricultural practices: A tool for research, extension and policy. Agricultural Systems: 156:115-125

- Grant ends March 31, 2019
- Regional grazing conference (January 2019 in Boonsboro, MD).
- 2019 grazing planning calendar, field days
- Continue electronic newsletter, even after grant expires
- Finish up case study farms, discuss results with producers; summarize and distribute results
- Complete converted acres deliverable
- Complete summaries of ADOPT workshops

Need more info? Want to get on our e-newsletter mailing list? koneill@cbf.org

What's next?

<u>Sjoerd Duiker (Penn State University)</u> was introduced and presented a program concerning Integration of Grazing and No-Tillage to Improve Soil Health and Add Profitability. (See the attached Hand-out.)

Integrating grazing and no-till to improve the bottom line and soil health

experiences from Pennsylvania

Sjoerd W. Duiker

PennState Extension

Potential benefits of Integration of Grazing and No-Tillage

- Grazing can **add value** to crop residues and cover crops
- Grazing has been shown to be a very **cost effective** way of feeding ruminants
- Well-managed perennials can **be rotated** with annuals to meet grazing needs
- By using no-till the **soil health** improvement under perennial vegetation is conserved
- Manure and trampling of organic matter into soil can help to **improve soil**

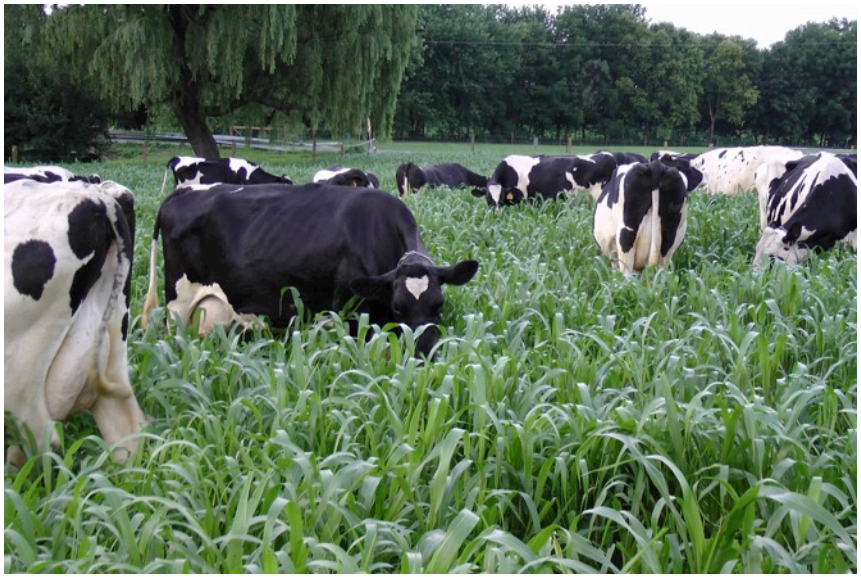

Management-Intensive Grazing (MIG) Helps Improve Soil and Productivity

- Short duration grazing events (grazing days or hours)
- High stock density (as high as 1,000,000 lbs liveweight/A)
- Long rest periods (20 -80 days)
- Typically only ~50% of standing biomass is consumed, the rest is left for soil improvement and regrowth
- Rotational grazing yields are 9-68% higher than continuous grazing yields*

* Nelson, C.J. (Ed.) 2012 Conservation outcomes from pastureland and hayland practices: Assessment, recommendations, and knowledge. Allen Press, Lawrence, Kansas

Effects of Management-Intensive Grazing

1. Short grazing period limits compaction
2. Long rest period stimulates strong roots
3. Long rest period allows soil life to heal compaction
4. New pasture regrowth is not grazed prematurely
5. Height of grazing (4-8”) optimal for regrowth
6. About 50% of standing biomass is left to feed soil and act as solar panel for regrowth
7. Manure spread more uniformly
8. Vegetation is grazed more uniformly

Benefits of No-Till Facilitating Grazing Integration

- Reduced cost of establishment
- Reduced time needed to prepare a seedbed
- Lower seeding rate needed for small-seeded crops due to more precise seed placement
- Soil erosion control
- Increased surface soil organic matter
- Better surface soil aggregation
- Continuous macropores in subsoil
- Lower susceptibility to compaction
- Greater infiltration
- Lower water evaporation losses
- More earthworms
- More beneficial microbes
- Ability to establish (cover) crops quickly

The Challenge of Grazing only Cool-Season Perennials

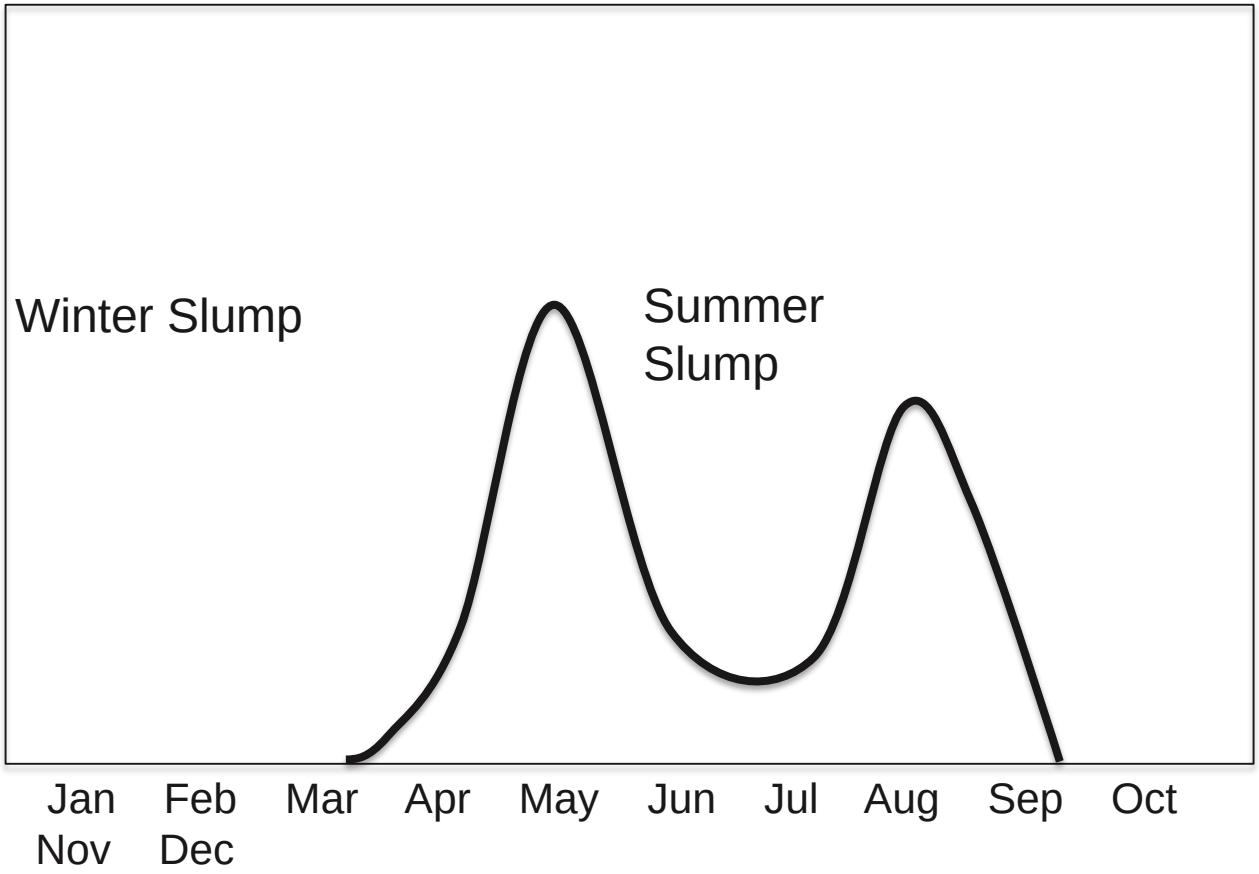

Summer Slump

Winter Slump

Maximizing Grazing by Integration of Diverse No-Till Established Annuals and Perennials

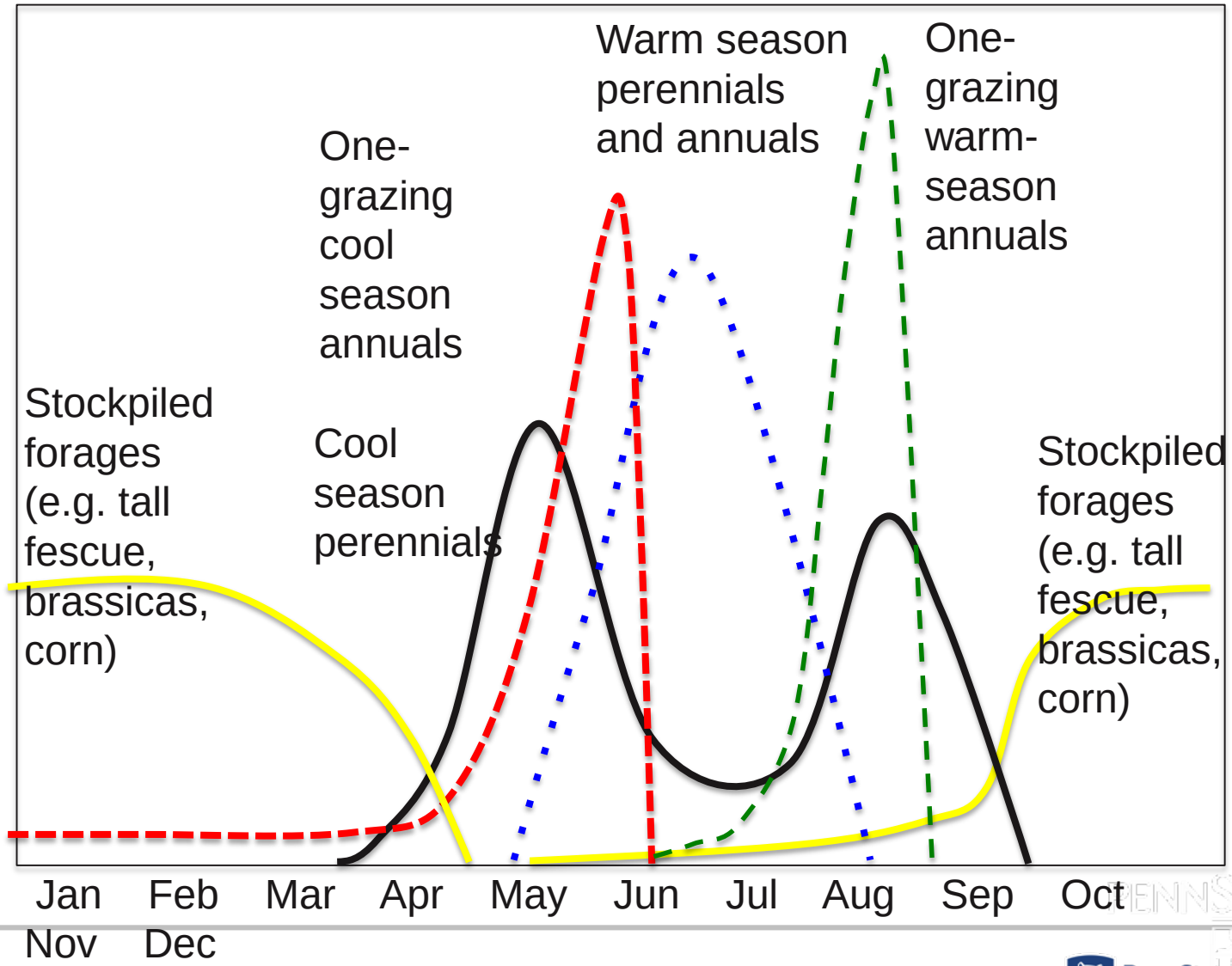

PennState Extension

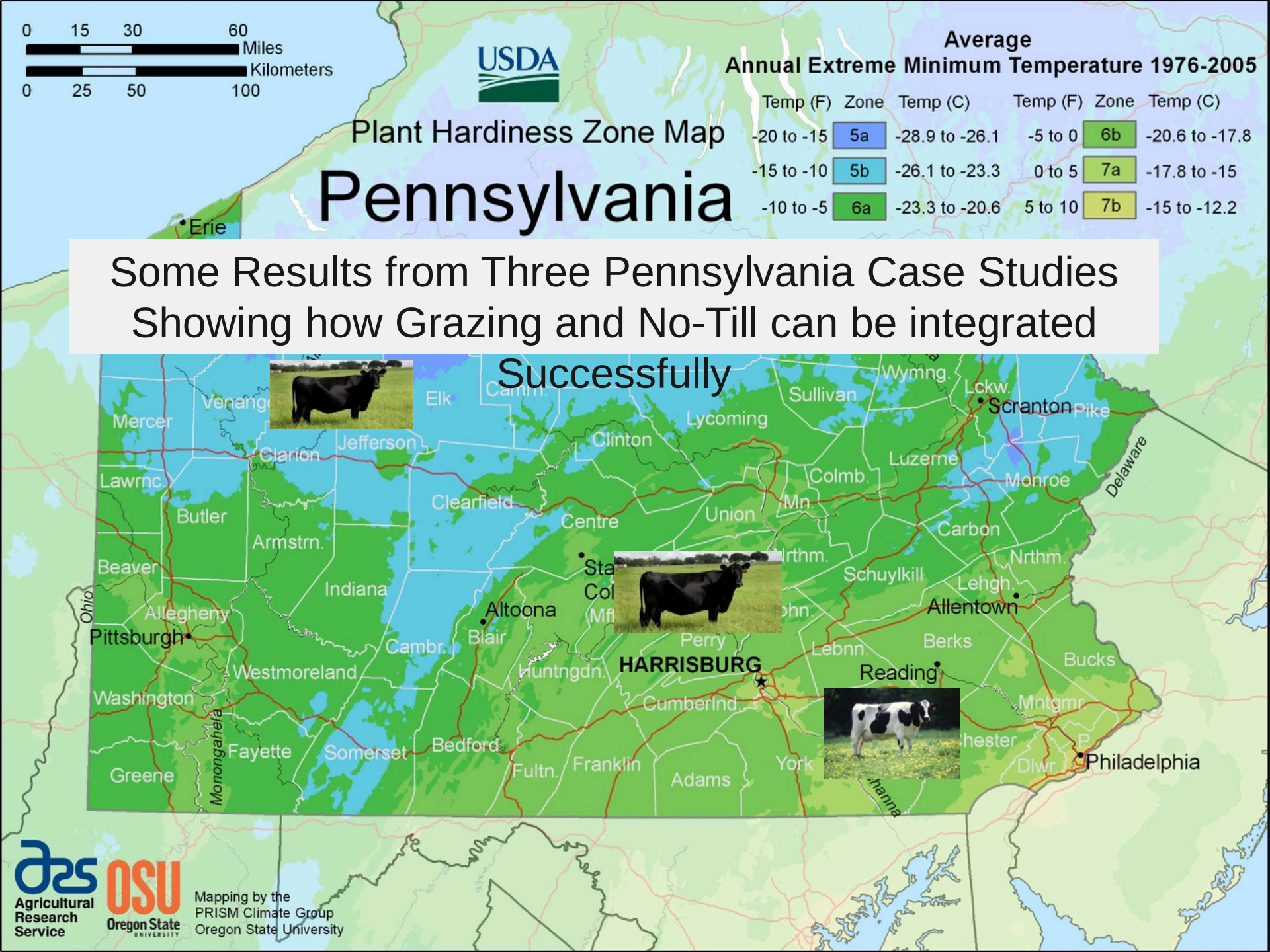
0 15 30 60
Miles
Kilometers
0 25 50 100
USDA
Plant Hardiness Zone Map
Pennsylvania
Average
Annual Extreme Minimum Temperature 1976-2005
Temp (F) Zone Temp (C)
-20 to -15 5a -28.9 to -26.1
-15 to -10 5b -26.1 to -23.3
-10 to -5 6a -23.3 to -20.6
Temp (F) Zone Temp (C)
-5 to 0 6b -20.6 to -17.8
0 to 5 7a -17.8 to -15
5 to 10 7b -15 to -12.2
Erie
Some Results from Three Pennsylvania Case Studies
Showing how Grazing and No-Till can be integrated
Successfully
Mercer
Venango
Elk
Cameron
Sullivan
Wymng.
Lckw.
Scranton
Pike
Lycoming
Clinton
Jefferson
Clarion
Luzerne
Colmb.
Monroe
Delaware
Lawrnc.
Clearfield
Butler
Union
Mn.
Centre
Carbon
Armstrn.
Nrthm.
Beaver
Schuylkill
Lehgh.
Indiana
Allentown
Ohio
Allegheny
Altoona
Pittsburgh
Blair
Perry
Berks
Cambr.
Lebnn.
Bucks
Westmoreland
Huntngdn.
HARRISBURG
Reading
Washington
Cumberlnd.
Mntgmr.
Monongahela
Fayette
Somerset
Bedford
Philadelphia
Greene
Fultn.
Franklin
Adams
York
Dlwr.
Agricultural Research Service
OSU Oregon State University
Mapping by the
PRISM Climate Group
Oregon State University

Farm 1 - Wilsons

Wilson Land & Cattle Co, Tionesta, Forest County, Pennsylvania, started in 2009

1600 feet above sea level, Average annual temperature 47 F, Average precipitation

- 220 acre farm – all owned except for 10 ac
- 130 acres cropland and pasture
- 100% no-till

- 102 black angus beef cows
- 160 dorset sheep
- 12 goats

- Farm entirely perimeter fenced
- 30 permanent paddocks
- Electric mobile interior fencing
- Started intensive rotational grazing in 2011
- Moves cows typically 4-6 times a day
- 70+ different plant species for grazing

02.06.2017 10:41

02.06.2017 10:48

Farm 2 - Brubakers

Double B Farms, McAlisterville, Juniata County, PA
650 feet above sea level, Average annual temperature 51F, Average annual precipitation 40”

- Enterprises:
  - farm store
  - broiler production
  - grain production
  - grass-fed limosine
  - embryo sales
- 400 acres – 180 acres owned
  - 90 acres fenced paddocks (22 total) w. perennial pasture
  - 90 acres perimeter fenced
    - 35 acres cropland (corn, soyb., spelt, hay
    - Graze cover crops and crop residues
    - 55 acres pasture
    - Typically move animals 1 time a day
- 50 breeding cows + calves = approx 90
- 100% no-till since 1996

Farm 3 – Weavers

Eli Weaver, Leola, Lancaster County, PA

400 feet above sea level, Average annual temperature 53 F, Average annual precipitation 4

- Enterprises:
  - dairy farm
  - Seed business
  - Nutrition business

- 30 milk cows, 12 replacement stock (calves, heifers, dry cows)
- 45 acres

Overview of Farms - Weaver

- One part of farm is fenced for grazing:
  - 7 acres alfalfa/grass, or orchardgrass/perennial ryegrass/meadowfescue/red+white clover)
  - 3 acres cool and warm season annuals
  - 15 acres can be used for grazing or harvesting

- The other part of the farm is set up for harvesting:
  - 20 acres (two 10 acre blocks that are rotated) – very intensive double and triple cropping for silage. E.g. triticale/annual ryegrass-sorghumsudan-oat/radish/y.sweet+red+white clover.

- The cows are typically grazed at night only and moved once every day, given 1/3rd of an acre at a time

Meeting Grazing Needs with Cool Season Annuals

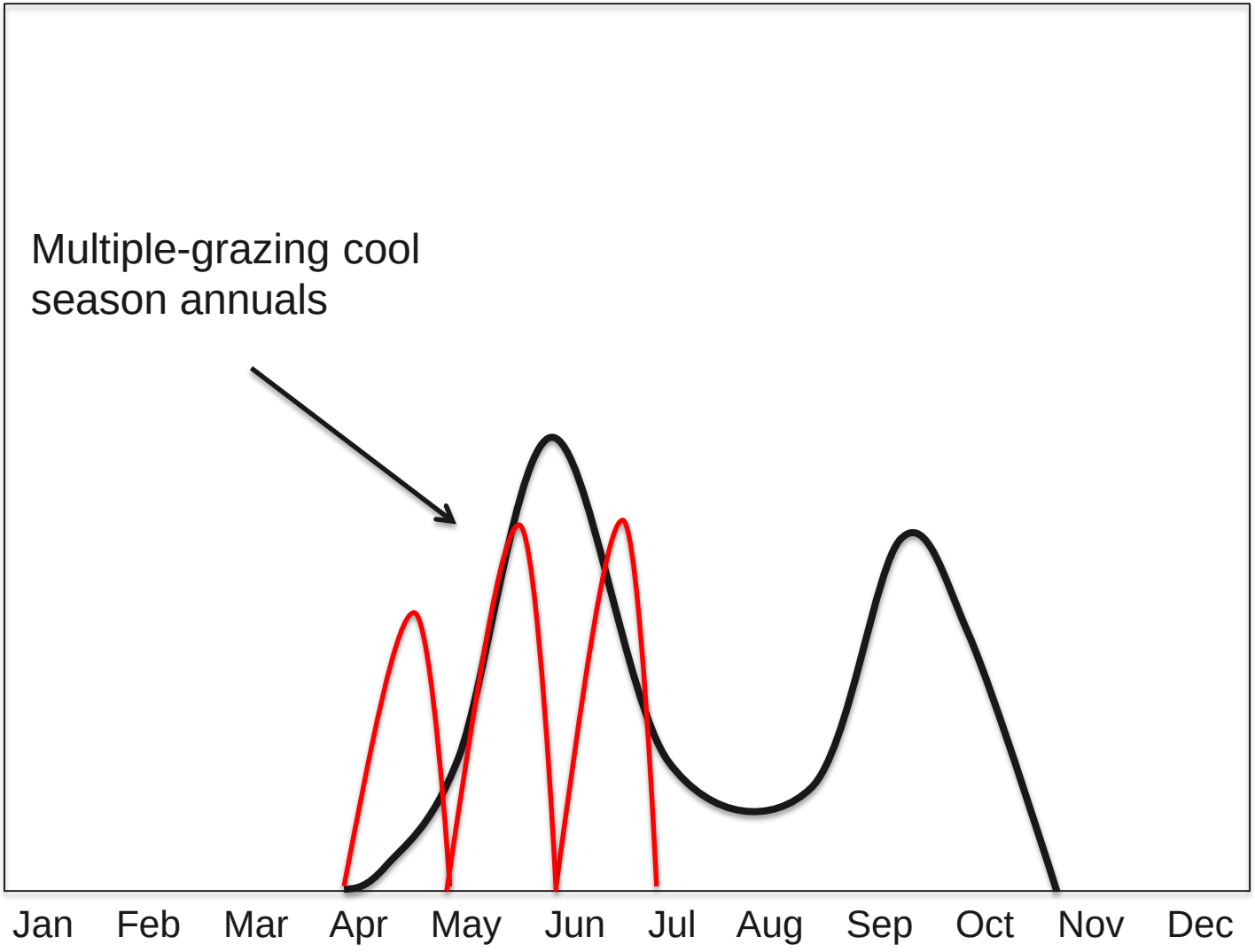

Grazing No-Till Cool Season Annuals

	Rye/vetch mix	Rye/vetch/clover mix	Rye/ryegrass vetch/clover mix	Annual ryegrass / triticale mix
	Lbs DM/A			
Date	7/17/15	6/1/16	4/21, 6/12/17	4/17, 5/4, 5/26/17
Location	Tionesta	Tionesta	Tionesta	Leola
Pre-	3618	6051	Varied	Varied
Post-	2818	2398	2614**	3470*
Grazed	800	3653	2150**	4216*
Grazed (%)	23%	60%	55%	45%

* Sum of three grazings
** Sum of two grazings

Grazed yields ~ 0.4-2.1 T/A

Meeting Grazing Needs by Integration of Diverse Crop Types

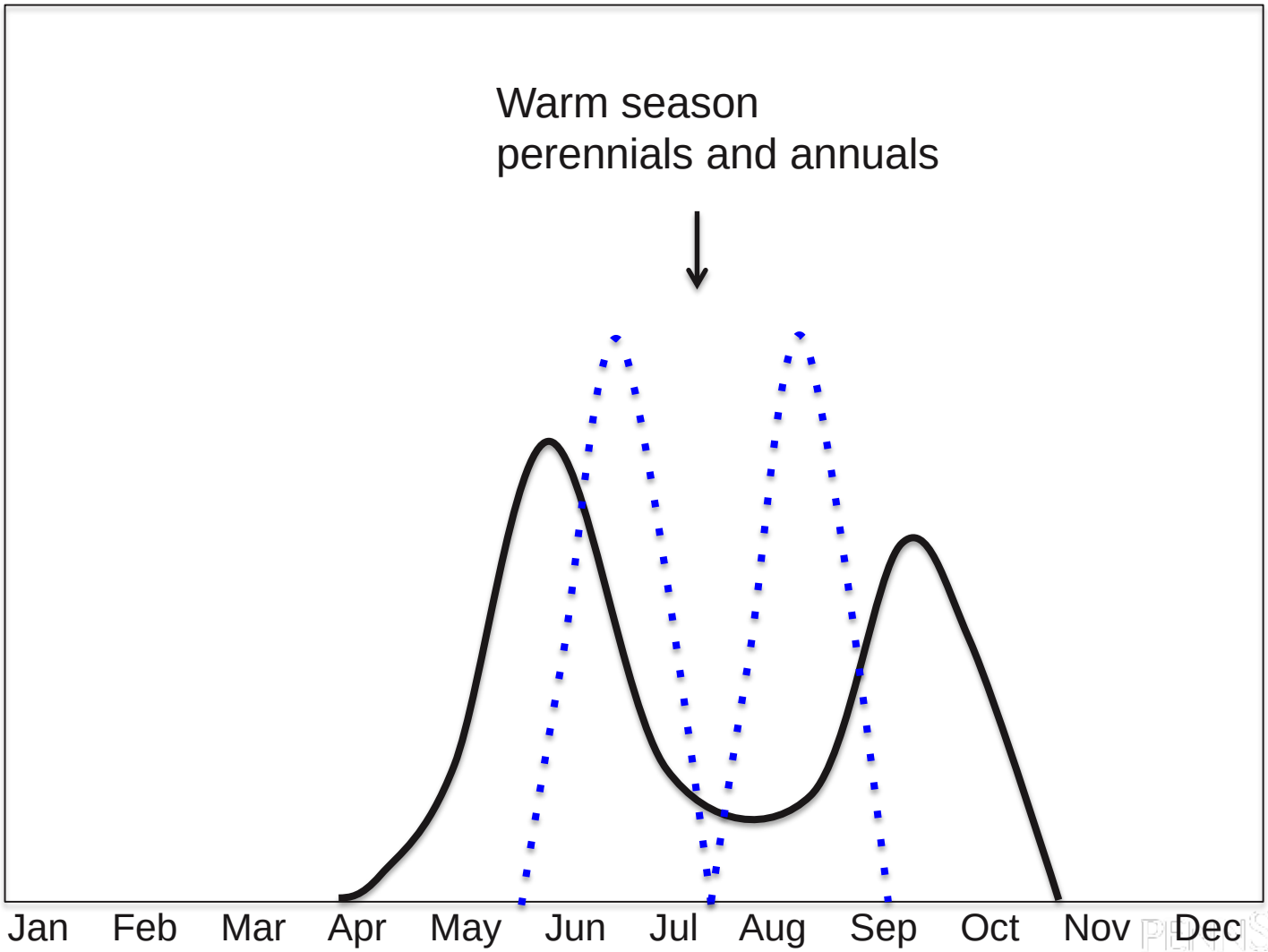

Summer Annuals - Repeat Grazing

	Japanese millet		Pearl millet (w.rape)		Sudangrass		
	Lbs DM/A						
Date	7/17/15	9/5/15	7/23/15	8/8/16	7/15/16	8/4/16	8/31/16
Location	Tionesta		McAlisterville		Leola		
Pre-	6786	4442	3996	3657	3131	3247	3872
Post-	3259	2409	2944	1285	2003	1582	1576
Grazed	3527	2033	1053	2372	1128	1867	2296
Grazed (%)	51%	46%	26%	64%	36%	57%	59%

Grazed yields ~ 2.8 – 3.2 T/A

Pearl Millet pre and post grazing

Japanese Millet and Rape/Pearl millet mixture

Sorghum Sudan Grass Pre and Post Grazing

Summer Annuals - One Grazing

	Corn/cucurbits/sunflower mix	Millet mix*
	Lbs DM/A	
Date	8/26/16	9/13/17
Location	Tionesta	
Pre-	11,173*	7238
Post-	4469**	2617
Grazed	6704**	4621
Grazed (%)	60%**	64%
* Cucurbits = 26%, Corn/Sunflower = 74% ** Not measured		

* 2017 summer annual millet mixture was
7 # Japanese millet
5 # Sorghum sudangrass
3 # Forage sorghum
4 # Grain sorghum
2 # Annual ryegrass
.5 # Teff
4 # Sunflower
1 # Mungbean
2 # Cowpea
1 # White clover
1 # Red clover

Grazed Yield ~ 2.3-3.4 T/A

Versatility of mixtures

7 # Japanese millet
5 # Sorghum sudangrass
3 # Forage sorghum
4 # Grain sorghum
2 # Annual ryegrass
.

5 # Teff
4 # Sunflower
1 # Mungbean
2 # Cowpea
1 # White clover
1 # Red clover

Mixture in better drained part of field

Same Mixture in poorly drained part of field

Annualized yields of different forage rotations

	# Grazings	Grazed yield (T DM/A)	Soil food and regrowth aboveground (T DM/A)
Winter annual mix	1	1.8	1.2 (40%)
Summer annual mix	2-3	2.8-3.2	2.8-3.2 (50%)
Summer annual mix	1	3.4	2.2 (40%)
Annual Yield of Winter/Summer Annual Rotation	**2-4**	**4.8-5.2**	**3.4-4.2 (40-50%)**
Switchgrass/ Big Bluestem/ Indiangrass	**2**	**4.7**	**1.0-1.1 (32%)**

Soil Health Evaluations 2016

Russ Wilson Soil Health Scores

Field ID	F5	P3C	P3A
DATE	5/4/16	5/4/16	5/4/16
Cover crop	Heavily compacted soil with grey/red mottling in surface horizon but bright yellow colored material below . Crimson, alsike, sweet yellow and some white clover	Cover crop mix of hairy vetch, alsike clover, red clover, sweet yellow clover, annual ryegrass	Indigenous perennial warm season mix (13 species)
Surface cover	7	8	8
Soil Structure	4	5	8
Organic matter	5	6	6
Soil erosion	8	8	8.5
Soil compaction	4	5	8
Water infiltration	2	7.5	8
Soil diversity	5	7	8
Plant and root growth	5	6	8

Compacted surface
Immediately after grazing
09 13 2017

Healed surface
After 2 months of rest
09 13 20

Soil life is the basis for healing compacted surface

07 17 2015 11 28

03 23 2016 11 15

Time (sec) to infiltrate 1 or 2 inches of water (single-ring infiltration test, Spring 2016)

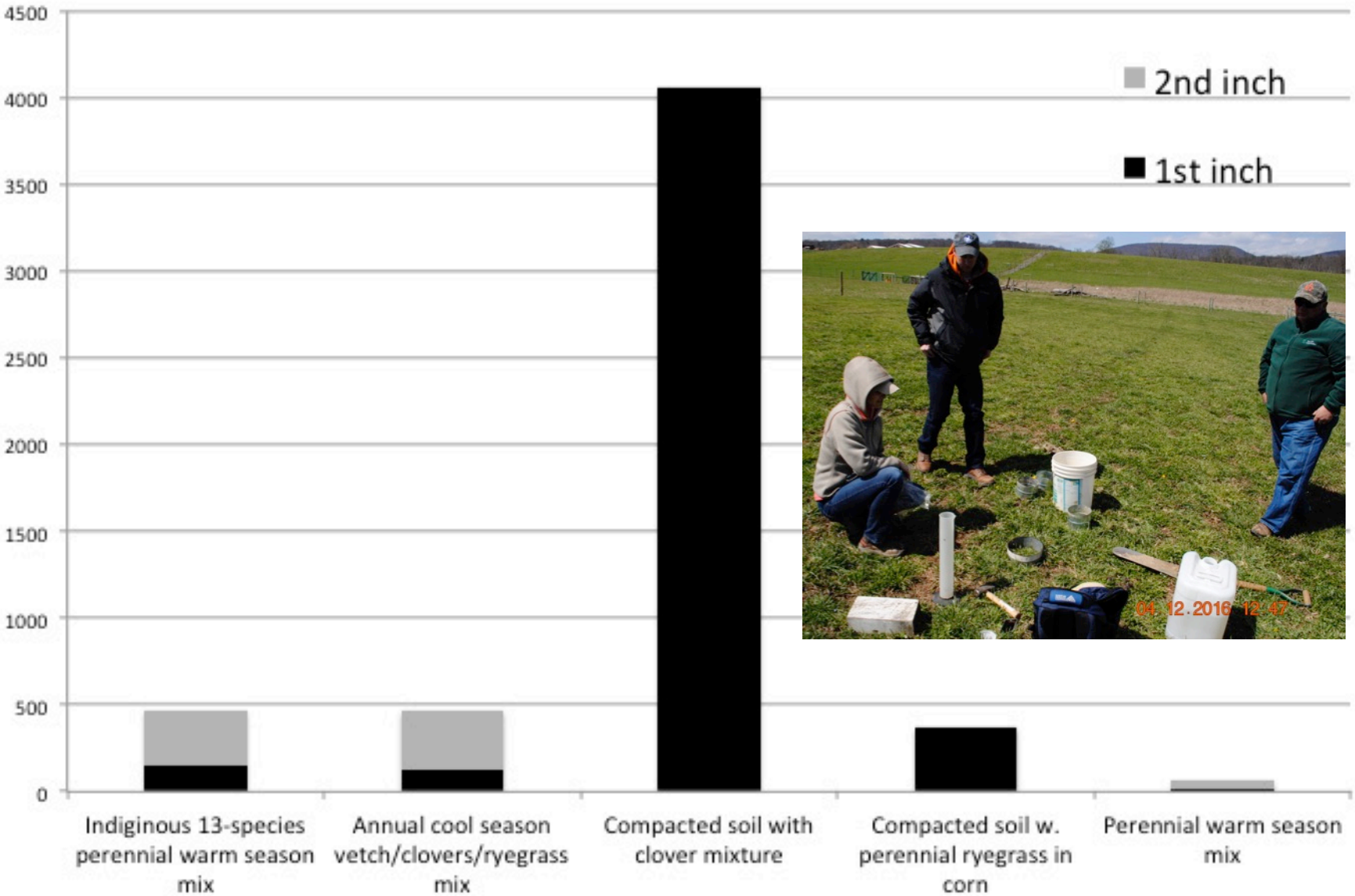

Conclusion

- Grazing is a cost effective way of feeding ruminant livestock
- No-till winter and summer annuals can be combined with cool and warm season perennials to meet summer and winter grazing needs
- If combined with intensive rotational grazing soil improves
- High production possible (5 T grazed DM/A/yr + 4 T left in field)
- This can help grass-fed beef and milk production increase in the U.S.

Dan Dostie (NRCS). Dan passed on updates from Peter Hoagland, State Forester (NRCS). Peter has sent out request to review several Conservation Practices and Statements of Work. He requests that these be reviewed and returned to him by August 16, 2018. Those Practices include: 384 – Alley Cropping; 384 – Woody Residue Treatment; 655 – Forest Trails and Landings; 656 – Road Trails and Enclosures; 380 – Wind Breaks and Shelter Belt Establishment; and 383 – Fuel Break Code. Dan relayed Conservation Practice updates from Jim Gillis, State Biologist (NRCS). Those included: 643 – Restoration of Rare or Declining Natural Communities; 422 – Hedgerow Planting; 390 – Riparian Forest Buffers; and 342 – Critical Area Planting. In the absence of Mark Goodson, State Agronomist (NRCS), Dan announced that changes had been made to the following Conservation Practices: 585 – Stripcropping; 484 – Mulching and 330 – Contour Farming. Dan provided comments on a newly published document entitled "Estimating Soil Loss from Gully Erosion (See attached Hand-out).

Estimating Soil Loss From Gully Erosion

ESTIMATING SOIL LOSS FROM GULLY EROSION - EPHEMERAL OR CLASSIC

Definitions

Ephemeral Gully - a shallow channel cut by concentrated runoff where soil loosened by mechanical operations is removed, generally between tillage operations. An ephemeral gully typically erodes to the tilled depth. If untreated, the ephemeral gully may develop into a classic gully over time. In general, this type of gully can be crossed with farm equipment and obliterated with tillage. Although tillage removes the visible erosion, tillage moves soil into the voided area and loosens soil material for the next rainfall event.

Classic Gully - a channel or miniature valley cut by concentrated runoff into the earth, but through which water commonly flows only during and immediately after rains or during the snow melt period. A gully may be either branching or linear (long, narrow, and of uniform width) with a width and depth that prevents normal tillage operations across the gully.

Procedures

When an ephemeral gully is actively eroding:

Ephemeral gullies are shallow cuts (often less than 1 foot deep) and generally have nearly vertical sides. Therefore, a difference in the top width and bottom width is not significant. Refer to Tables 1, 2, 3, and 4 for estimated erosion rates associated with different depth, width, and length combinations. For ephemeral gully dimensions (width, depth or length) that exceed the increments shown in these tables, combine the erosion rates from two or more columns that equate to the actual size.

The tables are based on the following formula. This formula may be used to estimate the ephemeral gully soil loss in lieu of using the tables.

$$L \times W \times D_i / 12 = V$$

Where: **L** is the total length in feet;
W is the average width in feet;
$\mathbf{D_i}$ is the average depth measured in inches; and
V is the displaced volume in cubic feet.

To convert this calculated volume into a weight of soil lost since the last tillage operation, use the following formula:

$$(V \times 90 / 2000) \times N / Y = E$$

Where: **V** is the volume in cubic feet calculated above;
90 is the average weight of soil in pounds per cubic foot;
2000 is the weight in pounds per ton;
N is the number of similar ephemeral gullies;
Y is the number of years the gully has been active; and
E is the current soil loss in tons per year.

NOTE: Ephemeral gully erosion occurs between seasonal tillage operations. The number of years (Y) that the gully has been active will always be equal to 1 for an ephemeral gully. On intensively tilled cropland, ephemeral gullies may form and reform between tillage operations in any given year. The formula above calculates the erosion that occurred since the most recent tillage operation.

When the entire classic gully is actively eroding:

Use the following direct computation method where the entire classic gully is actively eroding due to a lack of vegetation or surface armor. The following formula will be used to estimate the soil loss of the entire voided area in cubic feet:

$$L \times [(W_t + W_b) / 2] \times D_f = V$$

Where: **L** is the total length in feet;
W_t is the average top width in feet;
W_b is the average bottom width in feet;
D_f is the average depth measured in feet; and
V is the displaced volume in cubic feet.

To convert this calculated volume into a weight of soil lost over time (tons per year), use the following formula:

$$[(V \times 90 / 2000) / Y] \times N = E$$

Where: **V** is the volume in cubic feet calculated above;
90 is the average weight of soil in pounds per cubic foot;
2000 is the weight in pounds per ton;
Y is the number of years the gully has been active;
N is the number of similar classic gullies; and
E is the soil loss in tons per year.

NOTE: The number of years the gully has been actively eroding is important in gauging the severity of the total erosion. A determination of the beginning date is critical (use aerial photos, producer knowledge, etc. to estimate the year erosion started).

When portions of a classic gully are actively eroding:

This procedure is for use where major portions of the gully are stabilized with vegetation or surface armor, but erosion is occurring either as downward cutting or headward progression and enlargement of the gully in defined areas. This erosion may be visible as any of the following processes:

a) overfall erosion at a headcut;
b) mass sloughing of the gully sides or headcut.

Estimate annual soil loss in cubic feet from the actively eroding areas within the gully. Active areas may be:

a. Headcuts where:

Vertical Depth* x Average Width* x Estimated Annual Progression* = V

b. Bank Sloughing where:

Height* x Length* x Annual Sloughing Section Thickness* = V

.

NOTE: Any measurement designated with an asterisk (*) must be in units of "feet" and representative of an average value.

Add all individual erosion estimates (V) calculated for items a and b above to determine a total sum of the soil loss in cubic feet. Determine the annual loss by the following formula:

(V x 90) / 2000 = E

Where: **V** is the total volume in cubic feet of soil loss;
90 is the average weight of soil in pounds per cubic foot;
2000 is the weight in pounds per ton; and
E is the soil loss in tons per year.

NOTE: Soil loss estimates will be rounded and reported as whole numbers. A decimal number of .50 or greater will be rounded up to the nearest whole number. A decimal number less than .50 will be rounded down to the nearest whole number.

ESTIMATED TONS OF EPHEMERAL GULLY EROSION

TABLE 1 - DEPTH OF EROSION EQUALS ***2 INCHES***

W (ft) / L (ft)	1	2	3	4	5	6	7	8	9	10
25	**	**	1	1	1	1	1	2	2	2
50	**	1	1	2	2	2	3	3	3	4
75	1	1	2	2	3	3	4	5	5	6
100	1	2	2	3	4	5	5	6	7	8
125	1	2	3	4	5	6	7	8	8	9
150	1	2	3	5	6	7	8	9	10	11
175	1	3	4	5	7	8	9	11	12	13
200	2	3	5	6	8	9	11	12	14	15
225	2	3	5	7	8	10	12	14	15	17
250	2	4	6	8	9	11	13	15	17	19
275	2	4	6	8	10	12	14	17	19	21
300	2	5	7	9	11	14	16	18	20	23

TABLE 2 - DEPTH OF EROSION EQUALS ***4 INCHES***

W (ft) / L (ft)	1	2	3	4	5	6	7	8	9	10
25	**	1	1	2	2	2	3	3	3	4
50	1	2	2	3	4	5	5	6	7	8
75	1	2	3	5	6	7	8	9	10	11
100	2	3	5	6	8	9	11	12	14	15
125	2	4	6	8	9	11	13	15	17	19
150	2	5	7	9	11	14	16	18	20	23
175	3	5	8	11	13	16	18	21	24	26
200	3	6	9	12	15	18	21	24	27	30
225	3	7	10	14	17	20	24	27	30	34
250	4	8	11	15	19	23	26	30	34	38
275	4	8	12	17	21	25	29	33	37	41
300	5	9	14	18	23	27	32	36	41	45

** Insignificant amount (less than 1 ton)

ESTIMATED TONS OF EPHEMERAL EROSION*

TABLE 3 - DEPTH OF EROSION EQUALS ***6 INCHES***

W (ft) / L (ft)	1	2	3	4	5	6	7	8	9	10
25	1	1	2	2	3	3	4	5	5	6
50	1	2	3	5	6	7	8	9	10	11
75	2	3	5	7	8	10	12	14	15	17
100	2	5	7	9	11	14	16	18	20	23
125	3	6	8	11	14	17	20	23	25	28
150	3	7	10	14	17	20	24	27	30	34
175	4	8	12	16	20	24	28	32	35	39
200	5	9	14	18	23	27	32	36	41	45
225	5	10	15	20	25	30	35	41	46	51
250	6	11	17	23	28	34	39	45	51	56
275	6	12	19	25	31	37	43	50	56	62
300	7	14	20	27	34	41	47	54	61	68

TABLE 4 - DEPTH OF EROSION EQUALS ***8 INCHES***

W (ft) / L (ft)	1	2	3	4	5	6	7	8	9	10
25	1	2	2	3	4	5	5	6	7	8
50	2	3	5	6	8	9	11	12	14	15
75	2	5	7	9	11	14	16	18	20	23
100	3	6	9	12	15	18	21	24	27	30
125	4	8	11	15	19	23	26	30	34	38
150	5	9	14	18	23	27	32	36	41	45
175	5	11	16	21	26	32	37	42	47	53
200	6	12	18	24	30	36	42	48	54	60
225	7	14	20	27	34	41	47	54	61	68
250	8	15	23	30	38	45	53	60	68	75
275	8	17	25	33	41	50	58	66	74	83
300	9	18	27	36	45	54	63	72	81	90

** Insignificant amount (less than 1 ton)

EXAMPLE EROSION CALCULATIONS

Example 1: Ephemeral Gully Erosion:

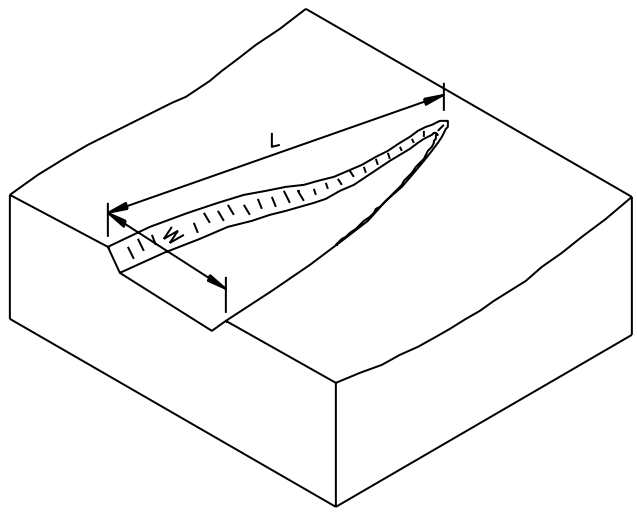

If: W = 8 feet
D_i = 6 inches
L = 125 feet

Then:
125 x 8 x 6 / 12 = 500 ft^3

And:
(500 x 90 / 2000) / 1 = 22.5

Round this value to 23 tons per year.

Example 2: Classic Gully Erosion

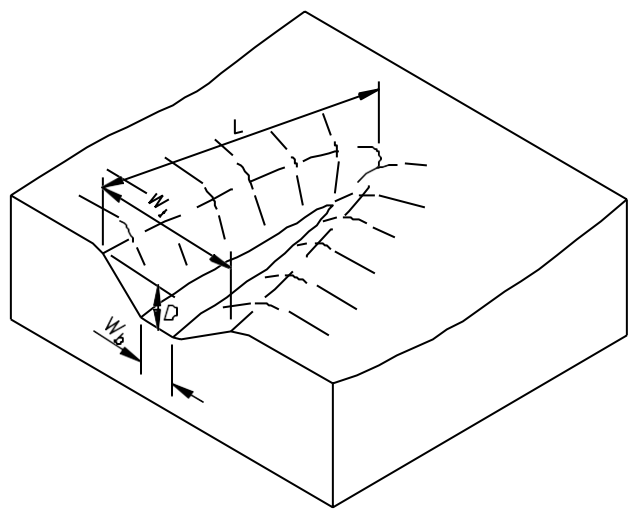

If: W_t = 20 feet
W_b = 8 feet
D_f = 7 feet
L = 125 feet

Then:

125 x [(20 + 8) / 2] x 7 = 12,250 ft^3

And erosion occurred over a 10 year period:

[(12,250 x 90) / 2000] / 10 = 55.13 tons per year

Round this value to 55 tons per year.

Example 3: Classic Gully Portions Actively Eroding

H (headcut): 3 ft. vertical depth
6 ft. wide
5 ft. annual regression
V = 3 x 6 x 5
V = 90 ft^3

A (sloughing): 8 ft. high
20 ft. long
1 ft. thick
V = 8 x 20 x 1
V = 160 ft^3

B (sloughing): 4 ft. high
15 ft. long
0.5 ft. thick
V = 4 x 15 x 0.5
V = 30 ft^3

Total V = 90 + 160 + 30 or 280 ft^3

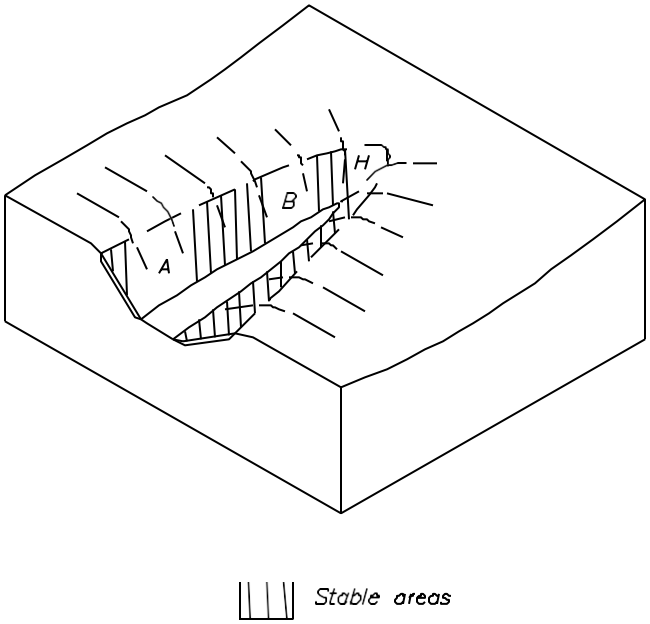

And: 280 x 90 / 2000 = 12.6 tons per year (use 13 tons)

Example 4: Ephemeral and Classic Gully Combination:

Ephemeral Gully Erosion:

If: W_1 = 10 feet
D_1 = 8 inches
L_1 = 150 feet

Then: V = 150 x 10 x 8 / 12
V = 1000 ft^3

And: E = (1000 x 90 / 2000) / 1
E = 45 tons per year

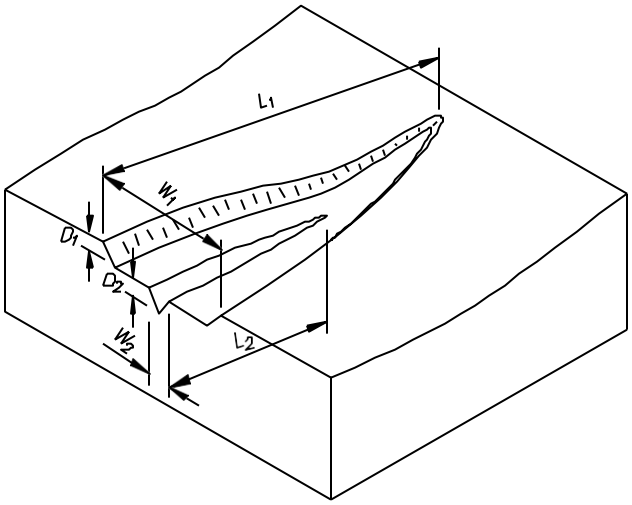

Classic Gully Erosion:

If: W_2 = 3 feet
D_2 = 3 feet
L_2 = 90 feet

Then: V = 90 x (3 + 0 / 2) x 3
V = 405 ft^3

And: E = (405 x 90 / 2000) / 1
E = 18.23 tons per year (use 18 tons)

Total Erosion = 45 tons per year + 18 tons per year = 63 tons per year

The content of this guidance was adopted from USDA Natural Resources Conservation Service Missouri *Estimating Soil Loss from Gully Erosion* (June 2002) Section I-D-3 Field Office Technical Guide.

<u>Hathaway Jones (NRCS)</u>. Hathaway provided an update on newly revised WRP/WRE and ALE Ranking Forms for FY 2019. (See attached Hand-out) She indicated that these forms are currently under review by National, but should be approved and available for use in the very near future. She reviewed each form and explained the different points.

Pennsylvania NRCS ACEP-ALE Ranking Form FY 2019		
National Ranking Factors	**Maximum Points**	**Points**
Percent of prime, unique, and important farmland in the parcel to be protected *(0 points for 50% or less, 4 points for greater than 50% and less than or equal to 60%, 8 points for greater than 60% and less than or equal to 70%, 12 points for greater than 70% and less than or equal to 80%, 17 points for greater than 80%)*	17	
Percent of cropland, pastureland, and grassland in the parcel to be protected *(0 points for 33 percent or less, 4 points for greater than 33 percent and less than or equal to 40 percent, 8 points for greater than 40 percent and less than or equal to 50 percent, 17 points for greater than 50 percent)*	17	
Ratio of the total acres of land in the parcel to be protected to average farm size in the county according to the *current USDA Census of Agriculture (www.agcensus.usda.gov)* ***Avg. Farm Size County_____ Acres of Parcel _____*** *(0 points for a ratio of 1.0 or less, 7 points for ratios of greater than 1.0 and less than or equal to 2.0, 15 points for ratios of greater than 2.0)*	15	
Decrease in the percentage of acreage of farm and ranch land in the county in which the parcel is located between the *last two USDA Censuses of Agriculture (www.agcensus.usda.gov)* ***Decrease in Percentage _____*** *(0 points for decrease of 0 percent or less, 1 points for decreases of greater than 0 and less than or equal to 5 percent, 5 points for decrease of greater than 5 and less than or equal to 10 percent, 9 points for decreases of greater than 10 and less than or equal to 15 percent, 16 points for decreases of more than 15 percent)*	16	
Decrease in the percentage of acreage of permanent grassland, pasture and rangeland, other than cropland and woodland pasture, in the county in which the parcel is located between the *last two USDA Censuses of Agriculture (www.agcensus.usda.gov)* ***Decrease in Percentage _____*** *(0 points for decrease of 0 percent or less, 3 points for decreases of greater than 0 and less than or equal to 5 percent, 5 points for decrease of greater than 5 and less than or equal to 10 percent, 8 points for decreases of greater than 10 and less than or equal to 15 percent, 15 points for decreases of more than 15 percent)*	15	
Percent population growth in the county as documented by the l United States Census *(www.census.gov)* ***State growth rate_____ County growth rate_____*** *(0 points for growth rate of less than one times the State growth rate, 4 points for growth rate of greater than one and less than or equal to two times the State growth rate, 7 points for growth rate of two and less than or equal to three times the State growth rate, 15 points for growth rate of more than three times the State growth rate)*	15	

DRAFT

Population density (county population per square mile) as documented by the United States Census (www.census.gov) ***State Density*** _____ ***County Density*** _____ *(0 points for population density less than one times the State population density, 4 points for population density of greater than one and less than or equal to two times the State population density, 7 points for population density of greater than two and less than or equal to three times the State population density, 15 points for population density of greater than three times the State population density)*	15	
Proximity of the parcel to other protected land, such as compatible military installations; land owned in fee title by the United States or an Indian Tribe, State or local government, or by a nongovernmental organization whose purpose is to protect agricultural use and related conservation values; or land that is already subject to an easement or deed restriction that limits the conversion of the land to nonagricultural use or protects grazing uses and related conservation values. *(0 points easement offer area (EOA) boundary greater than 3 miles from the protected land boundary, 4 points EOA is greater than 1 miles but less than 3 miles from protected land, 7 points EOA is within 1 mile of protected land boundary, 15 points EOA boundary adjoins protected land boundary)*	15	
Proximity of the parcel to other agricultural operations and agricultural infrastructure *(0 points if EOA boundary greater than 3 miles in proximity, 4 points if EOA is greater than or equal to 1 miles but less than 3 miles in proximity, 7 points EOA is within 1 mile in proximity, 15 points EOA boundary adjoins)*	15	
Existence of Farm or Ranch Land Succession Plan *(0 points for no plan, 7 points for a plan, 15 points for plan documented and performed by industry professional)*	15	
The land is currently enrolled into CREP or CRP that will expire within 1 year. *(15 points for yes, 0 points for no)*	15	
Parcel ability to maximize the protection of contiguous or proximal acres devoted to agricultural use *(15 points if the parcel links two non-continuous corridors of protected agricultural use, 6 points if parcel is a contiguous or proximal expansion of agricultural use protected area, 0 points parcel does not increase a protected agricultural use area)*	15	
The parcel is a grassland of special environmental significance that will benefit from the protection under the long-term easement. *(15 points if Yes, 0 points if No)*	15	
National Ranking Factors Total Points	**200**	

DRAFT

Pennsylvania NRCS ACEP-ALE Ranking Form FY2019		
State Ranking Factors	**Maximum Points**	**Points**
The Parcel is located within an area zoned for agricultural use, is located within an Agricultural Security Area or other locally identified unique agricultural area = **10 Points**	50	
The Parcel contains an archaeological or historical resource = **10 points**	10	
Eligible entity has demonstrated performance in managing and enforcing easements by monitoring 80 percent or more of its easements each year. (**30 points** for Yes, **0 points** for no or if there is no documentation to support a "Yes" determination)	30	
Protecting the parcel provides multifunctional benefits of farm or ranch land protection or improvement, such as: Are landowners a historically underserved group, small scale farmer, limited resource landowner, new or beginning farmer or rancher or veteran landowner? (**10 points** for Yes, **0 points** for No)	10	
The parcel contains State-specific factors for grasslands of special environmental significance. (**20 points** for Yes, **0 points** for No)	20	
Parcel is in a geographic region where enrollment achieves landscape, regional, or other agricultural or conservation goals and objectives identified in State plans. (**30 points** for Yes, **0 points** for No)	30	
The eligible entity is certified or for noncertified eligible entities, the entity will append or incorporate the NRCS minimum deed terms to or into their conservation easement deed or the entity has an already approved entity-specific deed template that they will use for the parcel. (**10 points** for Yes, **0 points** for No)	20	
Entity is technically eligible but is deficient in meeting the requirements of an existing or previous cooperative agreement, including: • Annual monitoring reports are insufficient, late, or not provided to NRCS • Entity has failed to complete actions toward closing on an existing FRPP or ACEP-ALE agreement by the third year • Documents are not submitted in accordance with ALE-agreement timeframes • Entity has not abided by the terms of an existing or closed FPP, FRPP, or ACEP-ALE agreement • Entity failed to enforce an existing FPP, FRPP, or ACEP-ALE funded after notification of a violation (Minus 25 points for five deficiencies, minus 20 points for four, minus 15 points for three, minus 10 point for two, minus 5 points for one, minus 0 points if no deficiencies)	-25	
The Parcel contains a state or federal threatened or endangered species (based on PNDI hit) = **10 points**	10	
The landowner has a current conservation plan addressing soil, water, plant, animal and other potential resource concerns. The conservation plan accurately reflects the current ag operation/management of the parcel = 2**0 points**	20	
State Ranking Factors Total Points	**200**	
Total Combined Ranking Score National and State Ranking Factors	**400**	

Signature of NRCS Employee Confirming Ranking Score **Date**

DRAFT

Susan Kubo (NRCS) was introduced and gave a Financial Programs Update. Her topic today had to do with financial hardships and contract cancellations by producers. In order to get committee input, a sub-committee was formed to gather information and to arrive at suggestions on how we can properly and efficiently deal with these individual situations as they present themselves. The sub-committee named were Greg Hostetter of the PA Department of Agriculture, Frank Schneider of the PA State Conservation Commission, Jane Sebright of the Center for Dairy Excellence and herself. In particular, they discussed contract cancellations, and a true definition of economic hardship and how it would apply to that particular cancellation request. Further, debt ratio, equity to asset ratio would be considered with each such request. If the contract was cancelled, how/if recovery of liquidated damages would come into play. Susan asked for further input from those present concerning the subject. She provided 2 hand-outs which are attached.

Subject: Cancellations for Financial Hardship and Liquidated Damage Assessments

1. Cancellation
    a. Policy allows for cancellation when requested by the participant in writing, when situations materialize post contract obligation, that present pretty serious hardship (death, major illness, bankruptcy, destruction of farm or ranch property through fire or theft, eminent domain, environmental or archeological concern). The list of situations also include economic or personal hardship.
    b. Defining economic hardship.
        i. Loss of a milk contract, post contract obligation, and inability to find a replacement contract is a justifiable reason for contract cancellation, however, the participant must provide a copy of the correspondence cancelling the milk contract.
        ii. Verification, in writing, from the participant's ag lender or accountant certifying that, post contract, the participant's debt ratio (cash operating surplus to interest expenses) has dropped to below 1. This ratio is a financial indicator of the participants ability to service debt, and influences a bank's decision to provide a farmer access to credit.

            OR

            Verification, in writing, from the participant's ag lender or accountant certifying that, post contract, the participant's equity to asset ratio has dropped below 0.7. This is an indicator of how much of the farm is owned, and how much of a cushion you have to borrow.

2. Liquidated Damages
    a. Policy required the assessment of 10% of the original obligation be assessed when a contract is terminated, and that cost recovery less than $1,000 be waived in the public interest (cost to recovery less than this amount would cost more than the recovery).
    b. Procedure
        i. At termination NRCS will assess 10% per policy
        ii. At informal review, participant may provide reasons or situations they feel would warrant a reduction in liquidated damages for Denise's consideration. NRCS will provide contract information to Denise, including contract history, staff hours expended in support of the contract, circumstances surrounding the violation, other contracts held by the participant, etc.

Infometrics (http://www.infometrics.co.nz/)

Home (http://www.infometrics.co.nz/) > News (http://www.infometrics.co.nz/news/) > Is dairy farm debt a significant financial stability risk?

IS DAIRY FARM DEBT A SIGNIFICANT FINANCIAL STABILITY RISK?

Posted on 22 November 2013 (http://www.infometrics.co.nz/is-dairy-farm-debt-a-significant-financial-stability-risk/) by Benje Patterson (http://www.infometrics.co.nz/author/benje/) in External (http://www.infometrics.co.nz/category/external/), Primary sector (http://www.infometrics.co.nz/category/primary-sector/)

Tweet Share Share 0

The Reserve Bank sounded a warning shot to the dairy sector last week in its latest Financial Stability Report, with Deputy Governor Grant Spencer saying that high farm debt levels pose risks to financial stability. Although the Bank was merely identifying a financial stability risk, some commentators have erroneously interpreted the warning as implying that LVR restrictions for dairy farmers are just around the corner.

At first brush, the $32.3 billion loaned to the dairy sector by banks (as at 30 June 2013) sounds like a colossal sum – particularly when one considers that dairying loans represents the banking industry's third largest loan type behind residential mortgages and business lending. Over the year to June 2013, dairy sector debt represented 9.2% of all lending by registered banks.

But before we jump to unfair conclusions about the risks posed to financial stability by the dairy industry, it is important to understand what really influences banks' risk exposure. The absolute proportion of the banking sector's loan book that has been extended to dairy farmers (and how this dairy sector debt interrelates to other parts of banks' loan books) comprises one dimension of risk exposure to the dairy industry. However, the specific

financial circumstances of these borrowers underpin yet another key aspect of risk exposure that can't be ignored. Let's now turn our focus to trying to understand dairy farmers' specific financial circumstances.

Decomposing dairy farm financial statements

The easiest way to get to the heart of dairy farmers' finances is to decompose their financial statements. This type of information for the average dairy farmer is available from DairyNZ's Economic Survey. We can use this information to better understand a farmer's actual ability to service their debts and how much these debts represent as a proportion of a dairy farm's total assets.

The ability of the typical owner-operated dairy farm to service debt can be measured by calculating a ratio of cash operating surplus to interest expenses (a type of interest coverage ratio). During the 2011/2012 season, this ratio was 2.7, indicating that the typical dairy farmer had a comfortable amount of residual cash to cover their finance costs.

However, as the Reserve Bank has pointed out, this debt servicing ability can rapidly deteriorate if milk prices fall or interest rates increase – this type of deterioration occurred during the 2008/09 season when the ratio plunged to 1.1. Even so, despite this volatility, the past five seasons have generally been good, with this ratio of interest coverage averaging 2.3.

A key point to bear in mind when considering debt servicing ability is that one bad year isn't the end of the world. A farmer can tide themselves over during a lean season, so long as they have sufficient access to cash or short-run credit. This drawing on credit lines is precisely what occurred during the 2008/09 season when operating cash flows were limited.

With these credit lines forming such an essential role in helping farmers manage their cash flows, it is important to understand what influences a bank's decision to provide dairy farmers with access to credit in the first place. To understand this decision, we must come to grips with farmers' current mix of debt and equity, as well as what drives the value of farmers' asset base.

According to balance sheet information from DairyNZ's Economic Survey, the average dairy farm carried $3.02 million of debt during the 2011/2012 season, offset by $6.72 million of assets. This financial structure left the typical farm with $3.70 million of owner's

equity. At first glance, this appears to be a relatively healthy financial position, with more than half of all assets financed out of the farmer's own pocket. However, a bank's willingness to extend credit also depends on what comprises this asset base.

DairyNZ's survey shows that more than two thirds of a typical dairy farm's assets were tied up in land/buildings, with livestock and investments accounting for most of the rest. Given this high level of exposure to land values, it is not surprising that the Reserve Bank has identified farm prices as a vulnerability of farmers and stability in the banking sector.

Even so, this vulnerability still needs to put in perspective by thinking about what really drives farm prices. The Reserve Bank identifies the outlook for commodity prices as a key determinant of dairy farm values, which makes sense as these prices are a proxy for expected returns from the farmland.

The Bank appears to be of the view that dairy prices will soon ease from their exceptionally high current level. Although I agree with this idea in principle, the international picture, particularly in China, suggests that any moderation is likely to be small, suggesting that dairy prices will remain at a historically elevated level over the medium-term.

The Reserve Bank points to slower economic growth in China as a key downside risk for commodity prices. But it is important to bear in mind that even though economic growth in China is slowing, the mix of Chinese growth is shifting away from investment and towards consumption. This increased focus on consumption, coupled with changing tastes in other developing nations, will ensure that global dairy demand continues grow at a robust rate.

A bigger risk for dairy prices is the potential for other dairy producing nations to ramp up supply to chase these good returns. However, even this risk is limited by the fact that not many of the other major dairy producing nations have lower cost models than New Zealand. Furthermore, in contrast to New Zealand's pastoral system, many other major dairy producing nations are heavily reliant on compound feed prices which closely follow food commodity price cycles.

On balance, it seems that a sharp correction to both dairy and farm prices is an unlikely scenario at present. This conclusion implies that risks to financial stability are contained for now, but the Reserve Bank's warnings regarding dairy sector debt still provide a prudent and balanced starting point for a discussion of risk. Even so, this does not mean the Bank's comments should in any way be interpreted as a prelude to LVR restrictions in

the dairy industry. The Reserve Bank knows full well that such restrictions could lead to inappropriate distortions to investment incentives and the ownership structures of farms would make dairy LVR restrictions unworkable in practice.

Enjoyed this article?

You might like to subscribe to our newsletter (http://www.infometrics.co.nz/news/subscribe-to-our-newsletter/) and receive the latest news from Infometrics in your inbox. It's free and we won't ever spam you.

You might also like

Getting down to business, or getting businesses down? (http://www.infometrics.co.nz/getting-business-getting-businesses/)

High currency is good news for you (http://www.infometrics.co.nz/high-currency-is-good-news-for-you/)

Assessing the effect of lower milk prices on regional dairy payouts (http://www.infometrics.co.nz/assessing-the-effect-of-lower-milk-prices-on-regional-dairy-payouts/)

Taking stock of Europe's recovery (http://www.infometrics.co.nz/taking-stock-of-europes-recovery/)

What have Russia and El Niño got in common? (http://www.infometrics.co.nz/what-have-russia-and-el-nino-got-in-common/)

Previous (http://www.infometrics.co.nz/risks-of-introducing-new-policy-instruments/)
Next (http://www.infometrics.co.nz/spending-sustainable-or-not/)

Keep up with the latest economic news

Subscribe to our newsletter

How much debt can you manage on your dairy?

By **Dianne Shoemaker** - April 9, 2015

Most farms have some level of debt. How much and what kind of debt will vary from farm to farm.

What do we mean by “what kind”? If I owe someone money, I owe someone money!

Yes, but “what kind” refers directly to how long you have to pay it back from the time you borrowed the money. If a loan has to be paid back in a year or less, it is a current loan. If you have more than a year to pay it back, it would be a non-current loan.

Non-current loans can then be categorized as intermediate or long-term. Loans for more than one year and less than 10 or 12 years are intermediate-term loans. These loans are typically for machinery, equipment and breeding livestock. Long-term loans are due in more than 10 or 12 years. Long-term loans are typically for land, buildings or improvements such as roads and tile. Loans should be no longer than the expected “life” of the asset being financed.

Affects liquidity

Why do we care? In February, we looked at the liquidity of dairy farms, or the ability to pay cash obligations when they are due. Focusing on the current debt, current ratio, working capital and working capital to gross income are important measures of liquidity. Now we will take the next step and look at the whole farm picture, or solvency.

Solvency refers to the ability of the farm to repay all of its debt obligations if the business had to be sold.

By the numbers

Table 1. 2013 Ohio Dairy Farm Business Summary

Balance sheet at market valuation Solvency

2013	Average of 35 Farms	Top 20% 7 Farms
Debt-to-asset ratio	30%	20%
Equity-to-asset ratio	70%	80%
Debt per Cow	$4,352	$3,769

Source: Ohio Dairy Farm Business Analysis Program

To do this, we pull out the balance sheet again and look at the debt-to-asset ratio. Here we are comparing the farm's total debt obligations to the all of the farm's assets. Solvency measures for the dairy farms that participated in the 2013 Ohio Farm Business Summary (farms are working on their 2014 analysis now), are shown in Table 1.

Debt-to-Asset (D/A) and Equity-to-Asset (E/A) ratios are opposite ways of looking at the same thing: How much of your business do you own, and how much does someone else own. You should own at least 70 percent of your own business. This gives you a cushion of borrowing potential to tap in a bad year or when you want to borrow more money to grow your business.

Consequently, we would like to see D/A ratios less than 30% or E/A ratios more than 70%. D/A could reasonably be higher if the farm is just entering the dairy business or in a growth phase, and is projected to be profitable enough to pay down the additional debt.

Debt per cow is also included in Table 1. A simple calculation, we take the total debt from the balance sheet and divide it by the total mature cows (milking and dry) from the same balance sheet.

The Debt/Asset and Debt/Cow measures are lower for the top 20 percent of farms compared to the average of all farms in the analysis. At 30 percent, the average of all farms' D/A ratio is good, with some borrowing reserves available. However, this is the average, which means that some of the farms are pushing into challenging territory.

Now what? What is the next step? How much debt is too much debt? While some farms can handle $3,000 or $4,000 of debt per cow, others struggle at $2,000. Next time, we will take a closer look at the ability of the cows to repay debt.

Need help crunching numbers? These are just a few of the important numbers you should know about your farm business. Analysis of your farm business is available through the Ohio Farm Business and Benchmarking Program. If your farm records are good, you can start right into an analysis of 2014.

The Ready, Set, Go! Program is available this year to work towards an analysis of 2015. Contact us to talk about what would work well for your farm at 330-533-5538 or shoemaker.3@osu.edu.

STAY INFORMED. SIGN UP!

Up-to-date agriculture news in your inbox!

Enter Your Email Address Sign Up

<

Dianne Shoemaker

Dianne Shoemaker is an OSU Extension field specialist in dairy production economics. You can contact her at 330-533-5538 or shoemaker.3@osu.edu.

<u>Ed Sanders (NRCS)</u> provided an update on ProTracts Data for the year so far. (See attached hand-out)

ProTracts Data

2018 AMA, EQIP, RCPP-EQIP Allocations

July 19, 2018

Program	Allocated	Contract Approval	Obligated	Unobligated	Payment	Contracts
EQIP General	$17,697,288	$17,617,083	$17,345,024	$352,264	$367,121	338
EQIP Prior Year	$1,627,924	$1,623,736	$1,623,736	$4,188	$0	19
AMA	$397,000	$368,805	$148,098	$248,902	$0	5
RCPP-EQIP	$1,421,963	$850,900	$739,972	$681,991	$2,255	34
EQIP Prior Year	$1,250,000	$0	$1,250,000	$0	$0	0
Total	$22,394,175	$20,460,524	$21,106,830	$1,287,345	$369,376	396

Program	Contracts	Funds	% contracts	% Funds
EQIP	349	$18,885,517	100.0%	100.0%
Livestock	211	$15,971,712	60.5%	84.6%
HU	110	$6,503,860	31.5%	34.4%

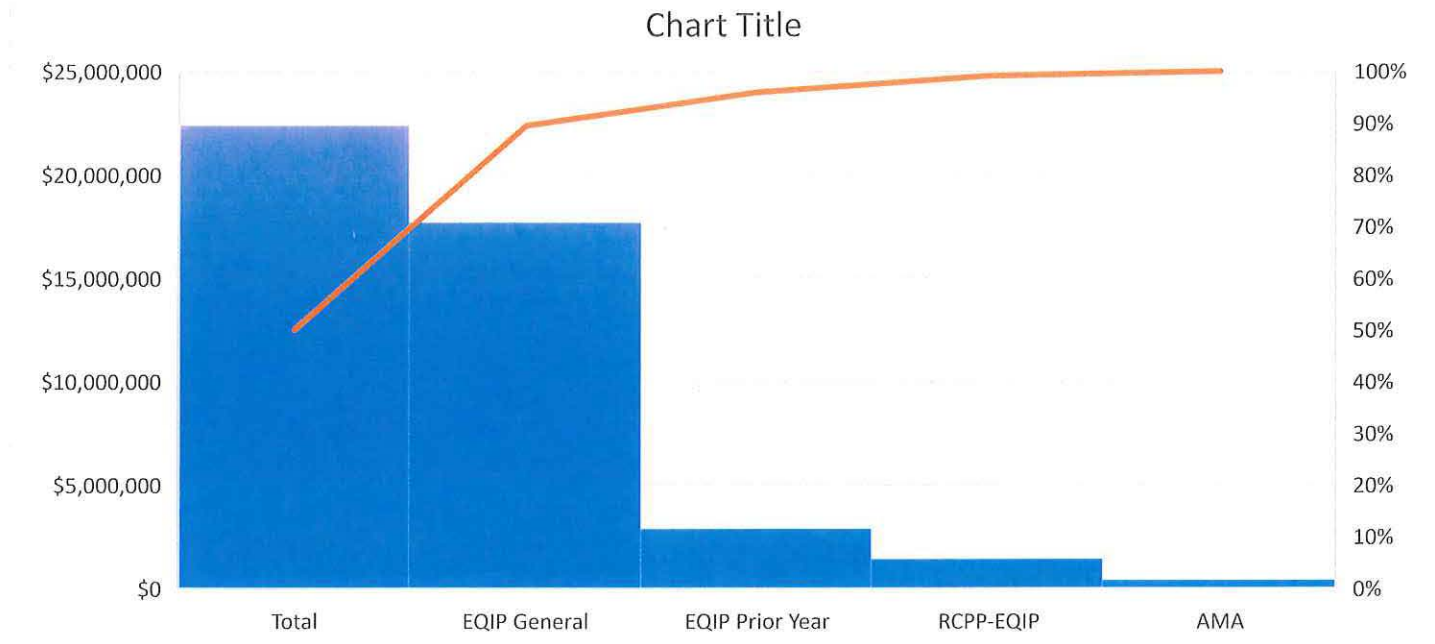

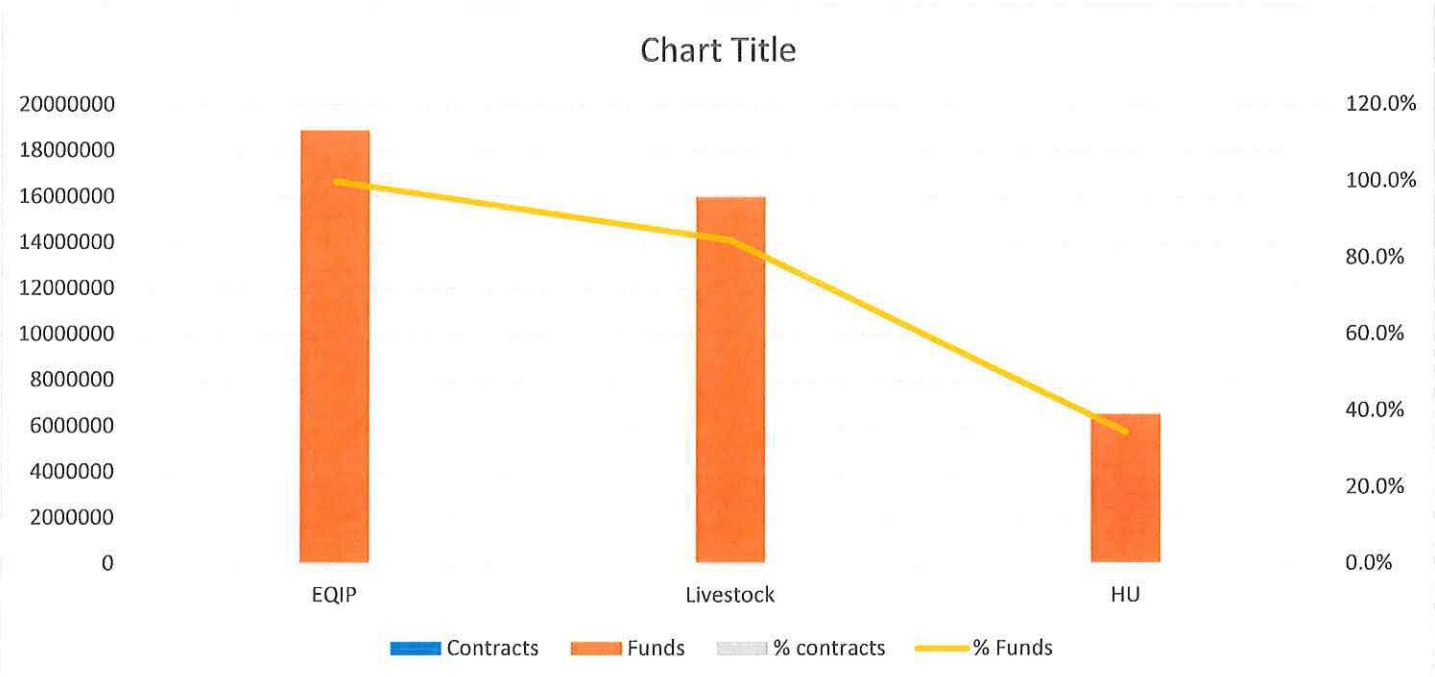

Susan Marquart (NRCS) provided an update on the Regional Conservation Partnership Program (RCPP). She indicated that several projects initiated in previous years are in process. We have two new projects this FY and the agreements are being processed and should begin in FY-2019. The projects are:

Chester County Conservation District – Conservation practices for the Chesapeake Bay area. EQIP funding of 2.5 million will be used.

PA Dept of Agriculture, Farmland Preservation – EQIP and Ag Lands Easement funds for conservation practices on farms and preserving farms as well.

Susan also discussed the status of the new Farm Bill, indicating that presently there are House and Senate versions of the bill. There are proposed changes to RCPP that would include:

(1) Add CRP
(2) Change Alternative Funding Agreements to Grant Agreements, and then run as a Grant Program and not use the programs as they are now.

PLEASE NOTE:
A recording of this meeting is available upon request.

Pennsylvania State Technical Committee Meeting

July 19, 2018

Denise Coleman (NRCS) opened the meeting at 1:00 PM and introduced Gary Groves, (FSA) Farm Service Agency State Executive Director and Sonja Jahrsdorfer who is the Project Leader/Supervisor of the US Fish and Wildlife Service, Pennsylvania Field Office at State College, PA. She then acknowledged those partners who were participating by phone Call-In. All included, there were 29 persons in attendance.

00:03:20 - Beth McGee (Chesapeake Bay Foundation) was introduced and provided a program concerning Rotational Grazing in Pennsylvania, Maryland and Virginia. Also about Quantifying the Environmental Benefits. (See the attached Hand-out.)

00:33:60 - Sjoerd Duiker (Penn State University) was introduced and presented a program concerning Integration of Grazing and No-Tillage to Improve Soil Health and Add Profitability. (See the attached Hand-out.)

01:13:21 - Dan Dostie (NRCS). Dan passed on updates from Peter Hoagland, State Forester (NRCS). Peter has sent out request to review several Conservation Practices and Statements of Work. He requests that these be reviewed and returned to him by August 16, 2018. Those Practices include: 384 – Alley Cropping; 384 – Woody Residue Treatment; 655 – Forest Trails and Landings; 656 – Road Trails and Enclosures; 380 – Wind Breaks and Shelter Belt Establishment; and 383 – Fuel Break Code. Dan relayed Conservation Practice updates from Jim Gillis, State Biologist (NRCS). Those included: 643 – Restoration of Rare or Declining Natural Communities; 422 – Hedgerow Planting; 390 – Riparian Forest Buffers; and 342 – Critical Area Planting. In the absence of Mark Goodson, State Agronomist (NRCS), Dan announced that changes had been made to the following Conservation Practices: 585 – Stripcropping; 484 – Mulching and 330 – Contour Farming. Dan provided comments on a newly published document entitled "Estimating Soil Loss from Gully Erosion (See attached Hand-out).

<u>01:20:51 - Hathaway Jones (NRCS)</u>. Hathaway provided an update on newly revised WRP/WRE and ALE Ranking Forms for FY 2019. (See attached Hand-out) She indicated that these forms are currently under review by National, but should be approved and available for use in the very near future. She reviewed each form and explained the different points.

<u>01:39:08 - Susan Kubo (NRCS)</u> was introduced and gave a Financial Programs Update. Her topic today had to do with financial hardships and contract cancellations by producers. In order to get committee input, a sub-committee was formed to gather information and to arrive at suggestions on how we can properly and efficiently deal with these individual situations as they present themselves. The sub-committee named were Greg Hostetter of the PA Department of Agriculture, Frank Schneider of the PA State Conservation Commission, Jane Sebright of the Center for Dairy Excellence and herself. In particular, they discussed contract cancellations, and a true definition of economic hardship and how it would apply to that particular cancellation request. Further, debt ratio, equity to asset ratio would be considered with each such request. If the contract was cancelled, how/if recovery of liquidated damages would come into play. Susan asked for further input from those present concerning the subject. She provided 2 hand-outs which are attached.

<u>02:05:03 - Ed Sanders (NRCS)</u> provided an update on ProTracts Data for the year so far. (See attached hand-out)

<u>02:10:50 Susan Marquart (NRCS)</u> provided an update on the Regional Conservation Partnership Program (RCPP). She indicated that several projects initiated in previous years are in process. We have two new projects this FY and the agreements are being processed and should begin in FY-2019. The projects are:

Chester County Conservation District – Conservation practices for the Chesapeake Bay area. EQIP funding of 2.5 million will be used.

PA Dept of Agriculture, Farmland Preservation – EQIP and Ag Lands Easement funds for conservation practices on farms and preserving farms as well.

Susan also discussed the status of the new Farm Bill, indicating that presently there are House and Senate versions of the bill. There are proposed changes to RCPP that would include:

(1) Add CRP
(2) Change Alternative Funding Agreements to Grant Agreements, and then run as a Grant Program and not use the programs as they are now.

STATE TECHNICAL COMMITTEE
ATTENDANCE

NAME	ORGANIZATION/ AGENCY/ COMPANY	E-MAIL ADDRESS (if different/changed since last meeting)	MAILING ADDRESS or PHONE # (if e-mail not available)	How did you hear about this meeting?		
				e-mail	newspaper	other (specify)
EDWARD SANDERS	USDA-NRCS	EDWARD.SANDERS@PA.USDA.GOV				
Susan Parry	USDA-NRCS	—				X
Titus Martin	ACES - grazing	"				
Frank Schneider	SCC	fschneider@pa.gov		✓		
Ann Basehore	Farmer	anniebsTar17@gmail.com				X - Susan Parry
Dean Collamer	GROWMARK FS	dcollamer@growmarkfs.com		✓		
Susan Kubo	NRCS	on file				
Marel King	CBC	mking@chesbay.us		✓		
Mark Roberts	FWS	mark_roberts@fws.gov				
Sonja Jahrsdoerfer	FWS	sonja_jahrsdoerfer@fws.gov				✓ Mark Roberts
Kelly O'Neill	CBF	Koneille@cbf.org		✓		
RON RAMSEY	TNC	rramsey@tnc.org		✓		
CURTIS SCHREFFLER	USGS	clschref@usgs.gov		✓		
PATRICK BOWLING	PADEP - BSDW			✓		
Mark Dubin	UMD	mdubin06@umd.edu		✓		
Sjoerd Duiker	PSU	sduiker@psu.edu		✓		
Greg Hostetter	PDA					
Katie Turner	TNC	Katie.turner@TNC.org		✓		
Bill Neilson	PFB	WNEILSON@PFB.com		✓		
Gary H. Groves	FSA	gary.groves@pa.usda.gov		✓		
Beth McGee	CBF	bmcgee@cbf.org				X invited
Vicky Roskovich	PRWA			✓		
Kurt Bond	Pheasants Forever	Kbond@pheasantsforever.org				Co-Worker

STATE TECHNICAL COMMITTEE
ATTENDANCE

NAME	ORGANIZATION/ AGENCY/ COMPANY	E-MAIL ADDRESS (if different/changed since last meeting)	MAILING ADDRESS or PHONE # (if e-mail not available)	How did you hear about this meeting?		
				e-mail	newspaper	other (specify)
Franklin Egan	PASA			✓		
Kate Carhalek	Woods Waters			✓		
Hathaway Jones	USDA/NRCS					