PEARSON EDDY

WRP WETLAND RESTORATION

UNITED STATES DEPARTMENT OF AGRICULTURE
NATURAL RESOURCES CONSERVATION SERVICE

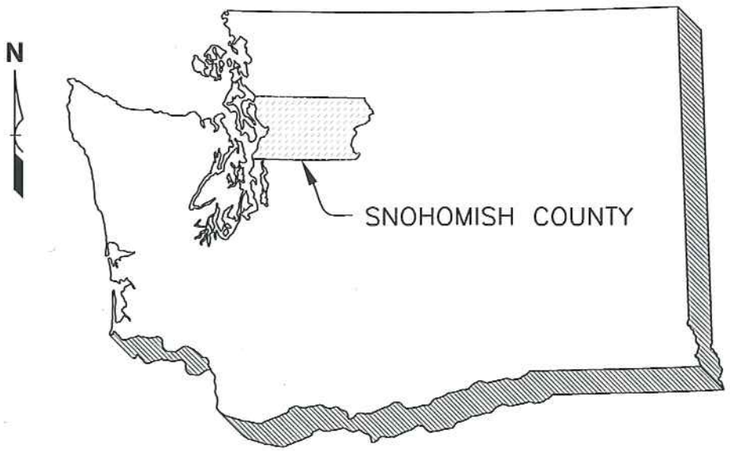

WASHINGTON STATE

N.T.S.

INDEX OF DRAWINGS

SHEET	TITLE
1.	COVER SHEET
2.	SITE MAP
3.	PIPES AND BANK STABILIZATION PLAN VIEW
4.	PIPES PLAN PROFILE & ROCK GRADATION TABLES
5.	SECTION VIEWS
6.	BANK STABILIZATION
7.	TREEN DITCH AND LOW WATER CROSSING DETAILS
8.	CHANNEL PLAN PROFILE
9.	CHANNEL CROSS SECTIONS
10.	DEEP DITCH DETAILS
11.	DE-LEVELING AND LOG STRUCTURE DETAILS
12.	SEDIMENT AND EROSION CONTROL GENERAL REQUIREMENTS
13.	SEDIMENT AND EROSION CONTROL PLAN MAPS

Access Road see note 7 below

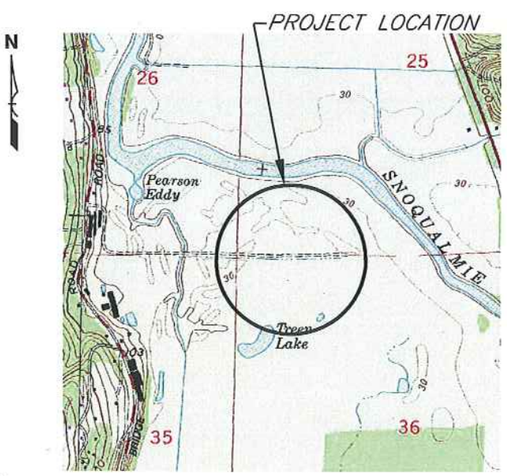

PROJECT LOCATION
SEC. 25, 26, 35 & 36,
T. 27 N., R. 6 E.

GENERAL NOTES

1. The attached NRCS Construction and Material Specifications are part of this plan and shall govern the installation of this project.
2. This project shall be constructed to the lines and grades shown in the drawings and detailed in the Construction Specifications.
3. The project will be operated and maintained as described in the Operation and Maintenance Plan prepared for this project.
4. No representation is made as to the existence or nonexistence of any utility. Washington State Law requires the contractor to call 811, "Call Before you Dig" 2 days prior to excavation activities.
5. All permits issued for this project are additional requirements for construction.
6. Survey Datum:
   Horizontal Datum: Washington State Plane-North Zone, NAD 83
   Vertical Datum: NAVD 88
7. The contractor is responsible to remove and restore to original or better condition all roads constructed to provide access.

LAWRENCE ALAN JOHNSON
STATE OF WASHINGTON
0032356
REGISTERED
PROFESSIONAL ENGINEER

1-3-2017

REVISIONS		
DATE	APPROVED	TITLE
12/01/16		SCE

		Date
Designed	LAJ / EAF	Jan 2014
Drawn	WDD	Mar 2014
Checked	KAS	Mar 2014
Approved		Mar 2014

PEARSON EDDY WRP
COVER SHEET
Snohomish County, Washington

NRCS
Natural Resources Conservation Service
United States Department of Agriculture

File Name: PEARSON EDDY
Drawing Name: COVER SHEET

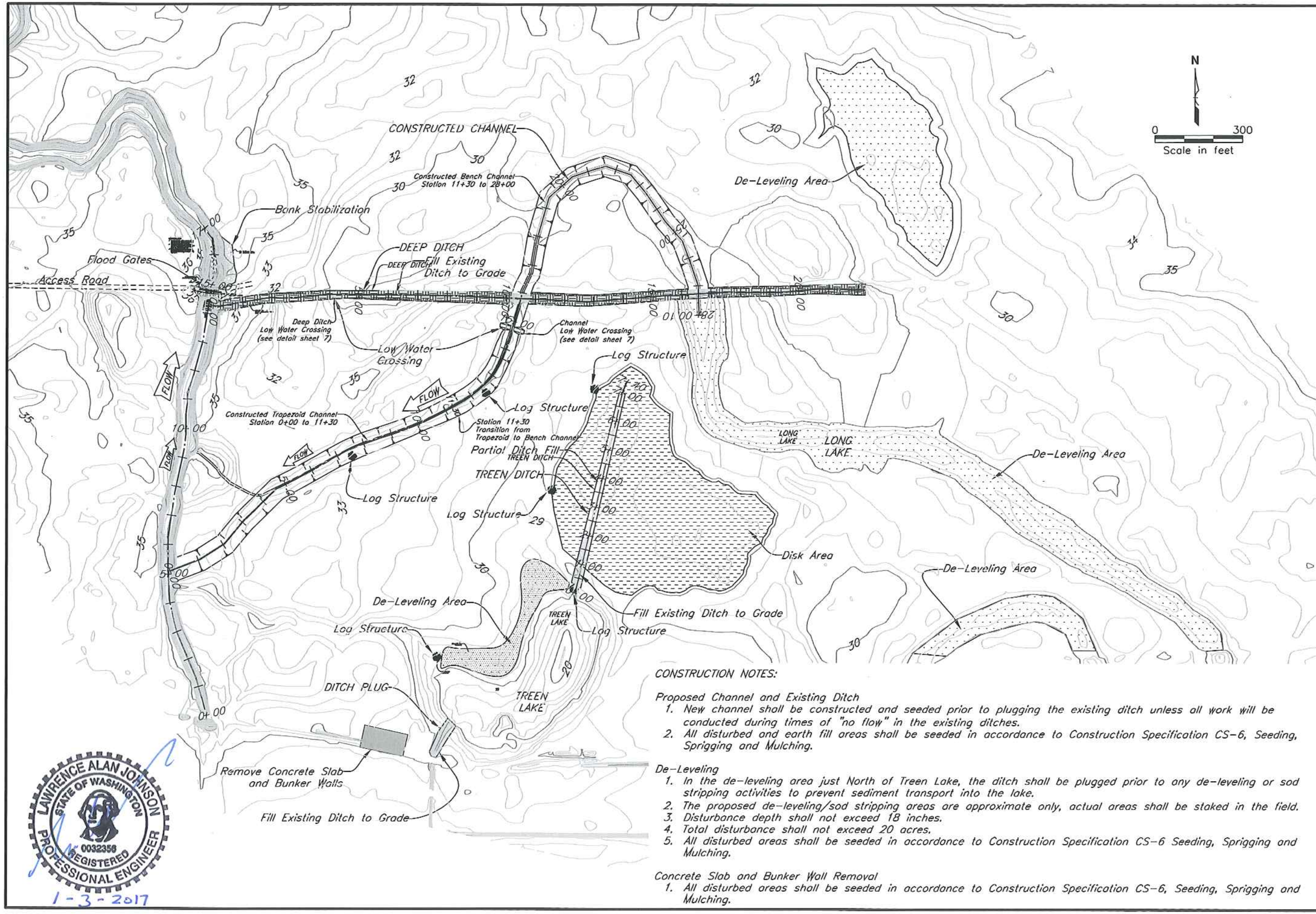

CONSTRUCTION NOTES:

Proposed Channel and Existing Ditch

1. New channel shall be constructed and seeded prior to plugging the existing ditch unless all work will be conducted during times of "no flow" in the existing ditches.
2. All disturbed and earth fill areas shall be seeded in accordance to Construction Specification CS-6, Seeding, Sprigging and Mulching.

De-Leveling

1. In the de-leveling area just North of Treen Lake, the ditch shall be plugged prior to any de-leveling or sod stripping activities to prevent sediment transport into the lake.
2. The proposed de-leveling/sod stripping areas are approximate only, actual areas shall be staked in the field.
3. Disturbance depth shall not exceed 18 inches.
4. Total disturbance shall not exceed 20 acres.
5. All disturbed areas shall be seeded in accordance to Construction Specification CS-6 Seeding, Sprigging and Mulching.

Concrete Slab and Bunker Wall Removal

1. All disturbed areas shall be seeded in accordance to Construction Specification CS-6, Seeding, Sprigging and Mulching.

LAWRENCE ALAN JOHNSON
STATE OF WASHINGTON
0032356
REGISTERED
PROFESSIONAL ENGINEER
1-3-2017

		Date
Designed	LAJ / EAF	Jan 2014
Drawn	WDD	Mar 2014
Checked	KAS	Mar 2014
Approved		Mar 2014

PEARSON EDDY WRP

SITE MAP

Snohomish County, Washington

NRCS
Natural Resources Conservation Service
United States Department of Agriculture

File Name
PEARSON EDDY

Drawing Name
SITE MAP

Sheet 2 of 13

CONSTRUCTION NOTES:

1. The access road length indicated is not reflective of the length of access road that will be required in the field
2. The access road shall be installed as needed to provide construction access to the site in compliance with the Storm Water Pollution Prevention Plan.
3. Road gravel shall be removed after construction to ensure that there is no overall addition of gravel fill area in the flood plain.

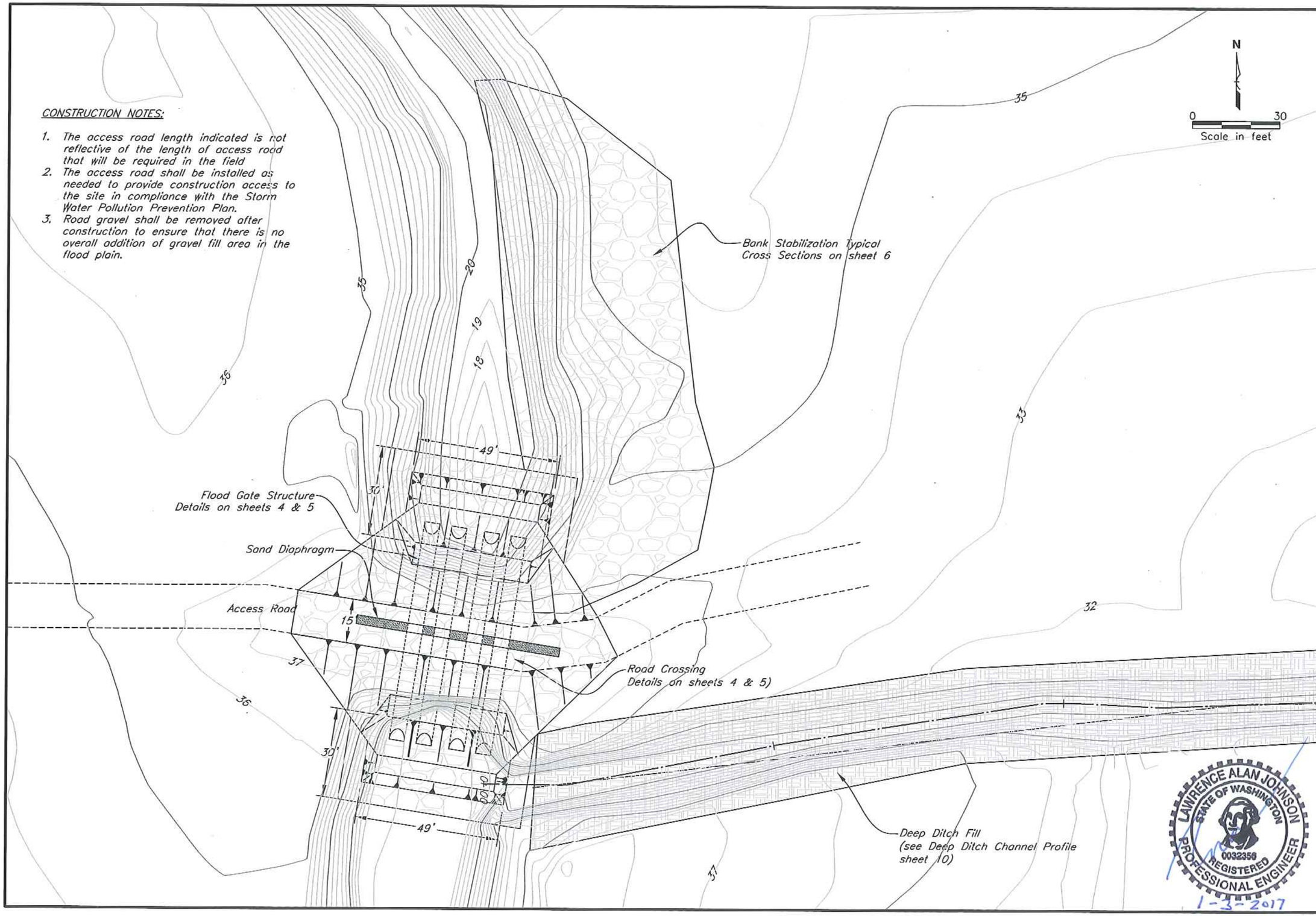

LAWRENCE ALAN JOHNSON
STATE OF WASHINGTON
0032356
REGISTERED
PROFESSIONAL ENGINEER
1-3-2017

		Date
Designed	LAJ / EAF	Jan 2014
Drawn	WDD	Mar 2014
Checked	KAS	Mar 2014
Approved		Mar 2014

PEARSON EDDY WRP

PIPES AND BANK STABILIZATION PLAN VIEW

Snohomish County, Washington

NRCS
Natural Resources Conservation Service
United States Department of Agriculture

File Name: PEARSON EDDY

Drawing Name: BANK STABILIZATION

Sheet 3 of 13

CONSTRUCTION NOTES:

1. The work area shall be dewatered and fish shall be removed as required in the permits prior to the start of work.
2. The structures shall be installed to all manufacturers specifications.
3. The MTR shall be set to allow passage of water and fish to an elevation of 28' NGVD.
4. All exposed earth areas shall be seeded in accordance to CS-6, Seeding, Sprigging and Mulching.

GENERAL NOTES:

Final road surface elevation will be 1 foot higher than original crossing.

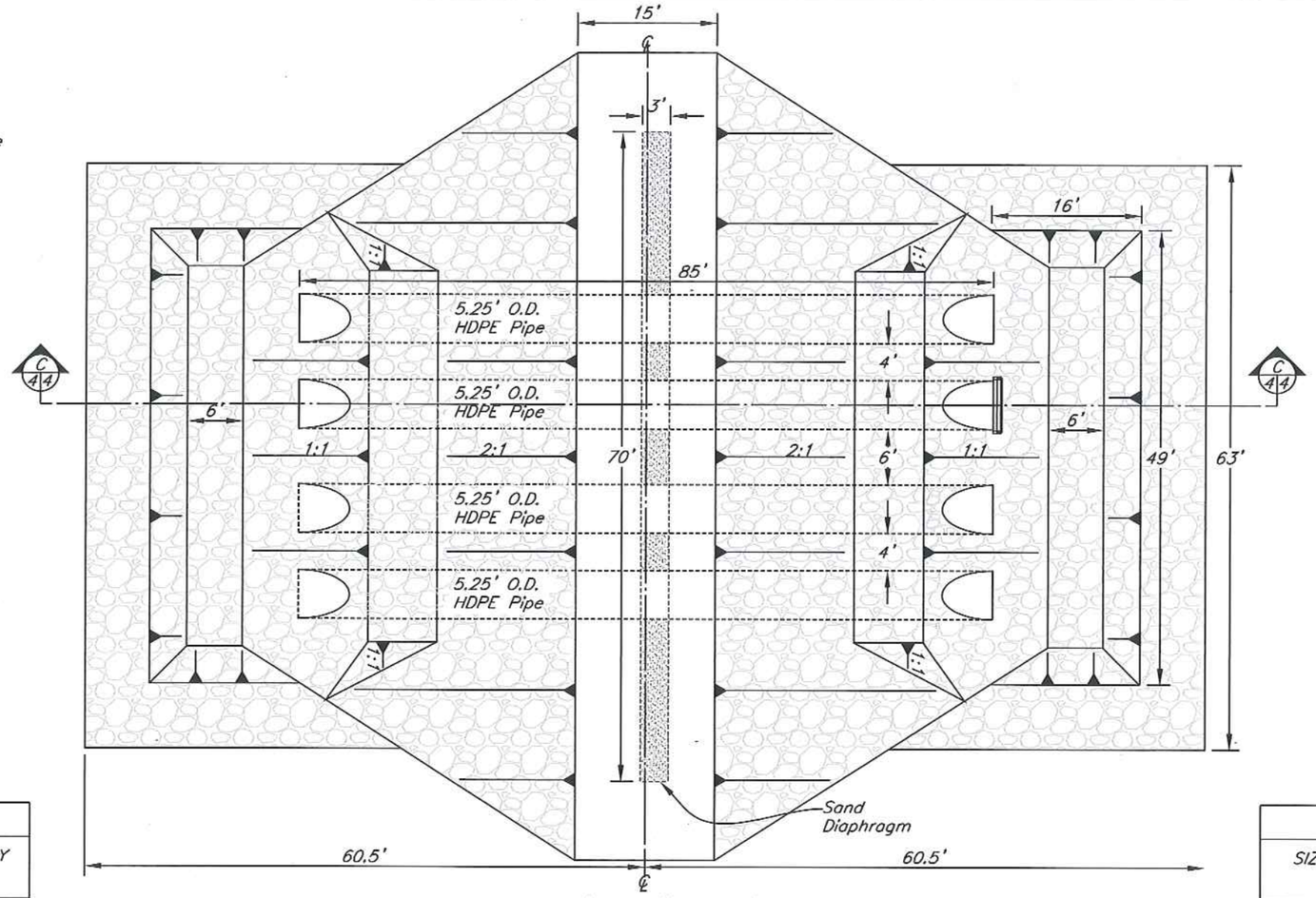

TYPICAL PLAN DETAIL
NTS

GRADATION

4" MINUS ROCK	
SIZE OPENING (Inches)	PASSING BY DRY WEIGHT (%)
4	100
3	50-100
2	15-50
1	0-15
Fines	0-5

GRADATION

30" MINUS ROCK	
SIZE OPENING (Inches)	PASSING BY DRY WEIGHT (%)
30	100
24	50-85
12	30-50
8	15-30
Fines	0-5

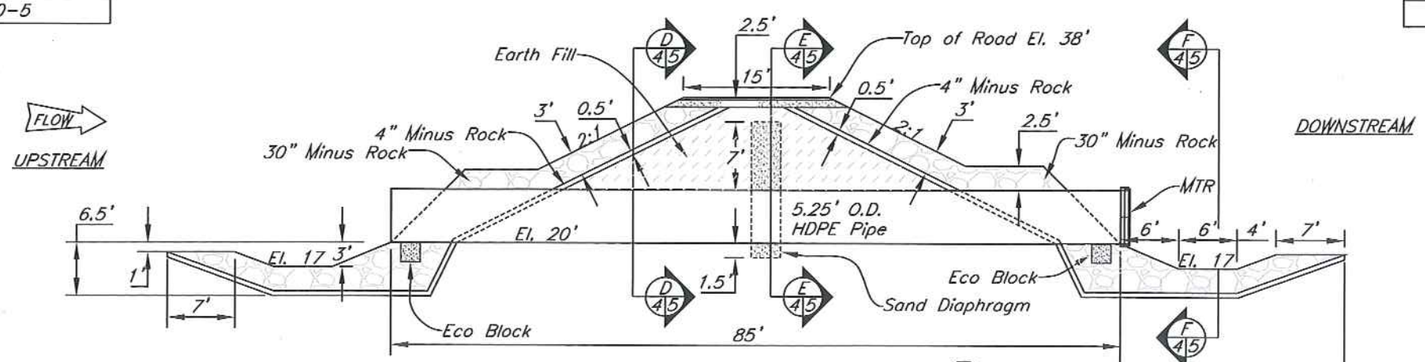

TYPICAL PROFILE DETAIL
NTS

C 4 4

LAWRENCE ALAN JOHNSON
STATE OF WASHINGTON
0032356
REGISTERED
PROFESSIONAL ENGINEER
1-3-2017

		Date
Designed	LAJ / EAF	Jan 2013
Drawn	WDD	Mar 2013
Checked	KAS	Mar 2014
Approved	RLR	Mar 2014

PEARSON EDDY WRP
PIPES PLAN PROFILE & ROCK GRADATION TABLES
Snohomish County, Washington

NRCS
Natural Resources Conservation Service
United States Department of Agriculture

File Name
PEARSON EDDY
Drawing Name
PIPE DETAILS

Sheet 4 of 13

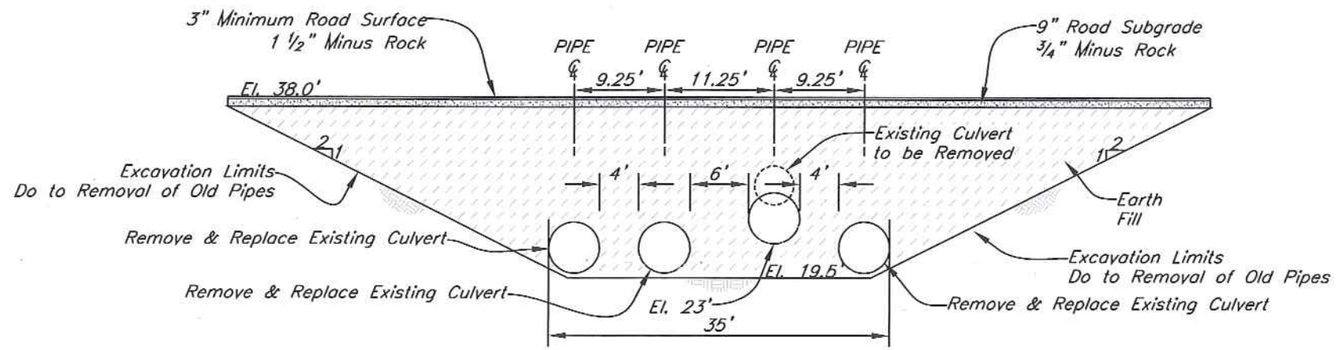

TYPICAL CROSS SECTION DETAIL
NTS

D
4 5

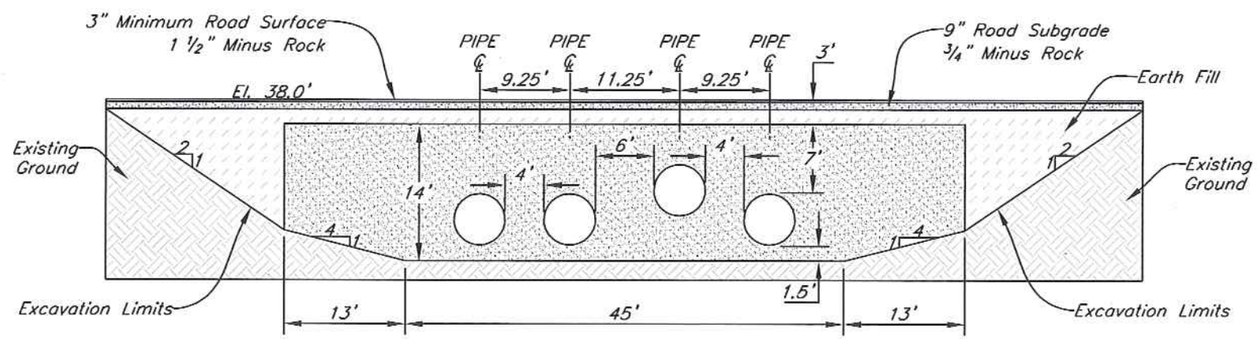

TYPICAL CROSS SECTION DETAIL
NTS

E
4 5

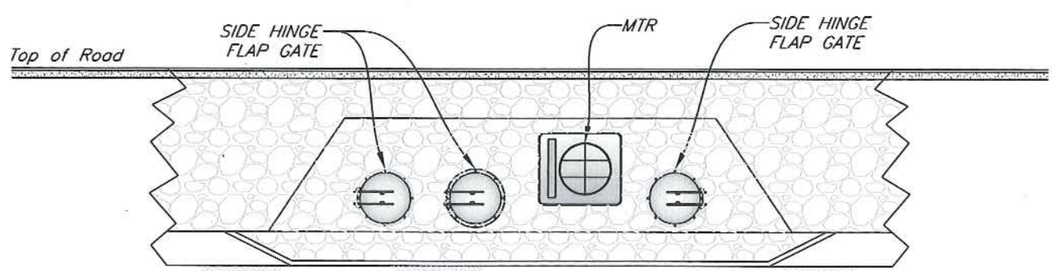

TYPICAL CROSS SECTION DETAIL
NTS

F
4 5

		Date
Designed	LAJ / EAF	Jan 2013
Drawn	WDD	Mar 2013
Checked	KAS	Mar 2014
Approved		Mar 2014

PEARSON EDDY WRP
SECTION VIEWS
Snohomish County, Washington

NRCS
Natural Resources Conservation Service
United States Department of Agriculture

File Name
PEARSON EDDY
Drawing Name
SECTION VIEWS

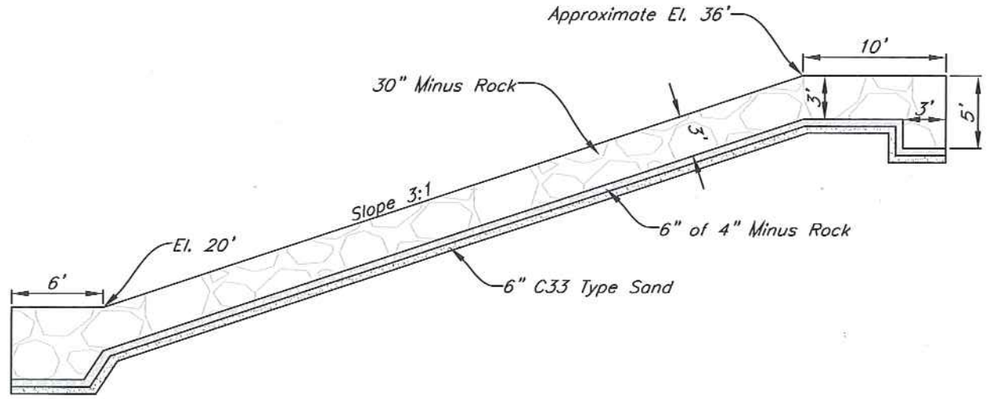

RIGHT BANK TYPICAL
CROSS SECTION D.S. OF FLOOD GATE
N.T.S.

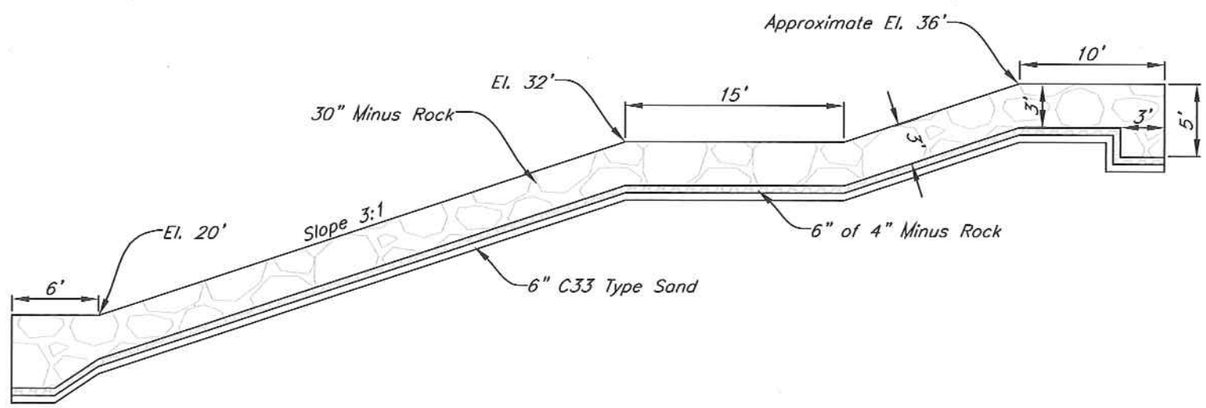

RIGHT BANK TYPICAL
CROSS SECTION AT FLOOD GATE
N.T.S.

LAWRENCE ALAN JOHNSON
STATE OF WASHINGTON
0032358
REGISTERED
PROFESSIONAL ENGINEER
1-3-2017

		Date
Designed	LAJ / EAF	Jan 2014
Drawn	WDD	Mar 2014
Checked	KAS	Mar 2014
Approved		Mar 2014

PEARSON EDDY WRP
BANK STABILIZATION

Snohomish County, Washington

NRCS
Natural Resources Conservation Service
United States Department of Agriculture

File Name
PEARSON EDDY

Drawing Name
BANK STAB

Sheet 6 of 13

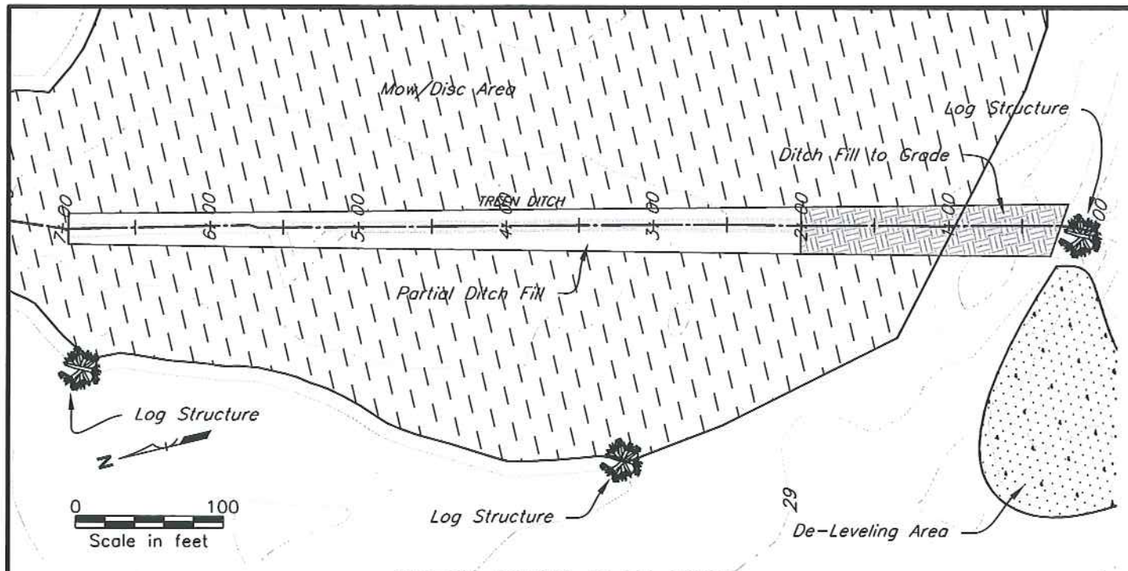

TREEN DITCH PLAN VIEW

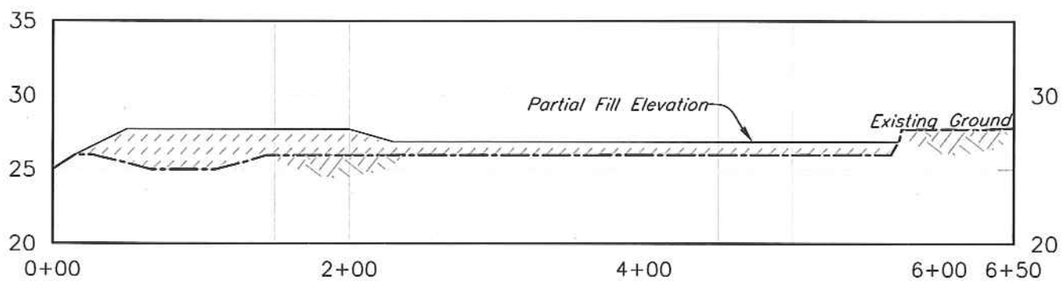

TREEN DITCH PROFILE

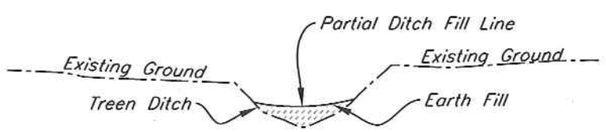

TREEN DITCH PARTIAL FILL – TYPICAL CROSS SECTION
STATIONS 0+00 TO 5+50
NTS

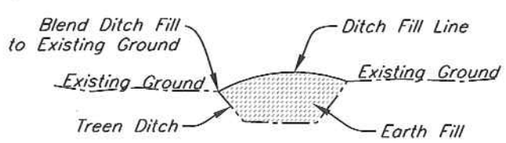

TREEN DITCH FILL TYPICAL CROSS SECTION
STATION 5+50 TO 6+70
NTS

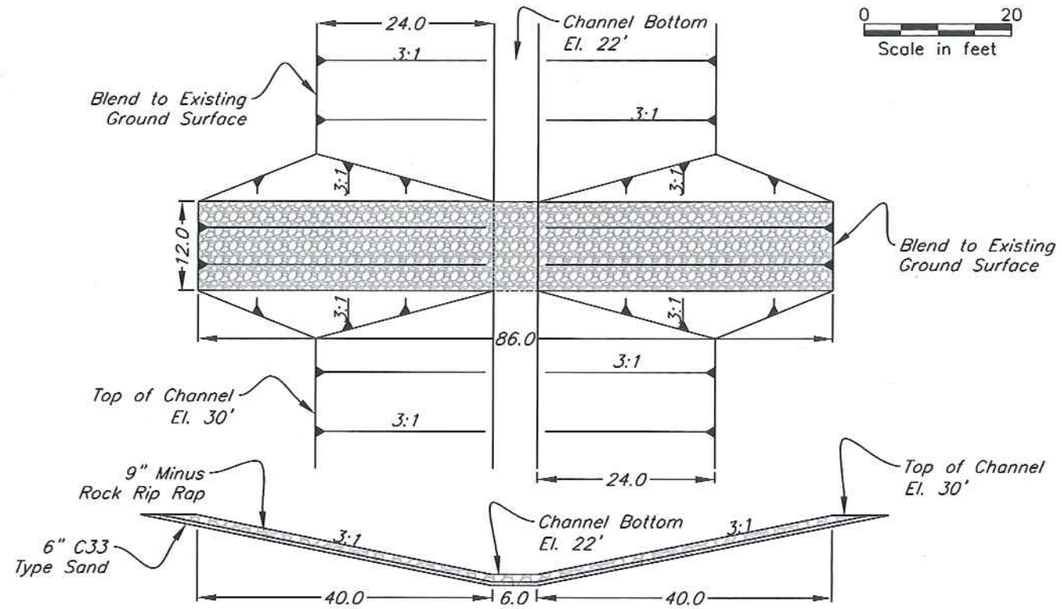

CHANNEL LOW WATER CROSSING DETAIL
NTS

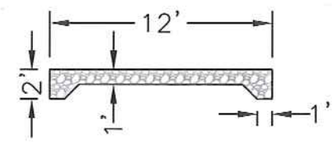

Typical Low Water Crossing
Cross Section
NTS

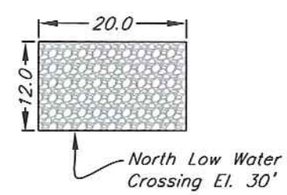

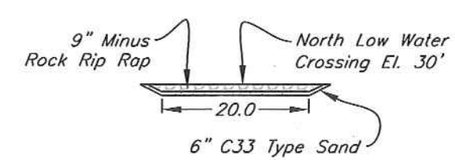

DEEP DITCH LOW WATER CROSSING DETAIL
NTS

GRADATION

LOW WATER CROSSING RIP RAP		
	RANGE	
D100	5.5"	9"
D75	5"	7"
D50	4"	6"
D30	3.5"	5"

LAWRENCE ALAN JOHNSON
STATE OF WASHINGTON
0032356
REGISTERED
PROFESSIONAL ENGINEER
1-3-2017

		Date
Designed	LAJ / EAF	Jan 2014
Drawn	WDD	Mar 2014
Checked	KAS	Mar 2014
Approved		Mar 2014

PEARSON EDDY WRP
TREEN DITCH & LOW WATER CROSSING DETAILS
Snohomish County, Washington

NRCS
Natural Resources Conservation Service
United States Department of Agriculture

File Name
PEARSON EDDY
Drawing Name
TREEN DITCH

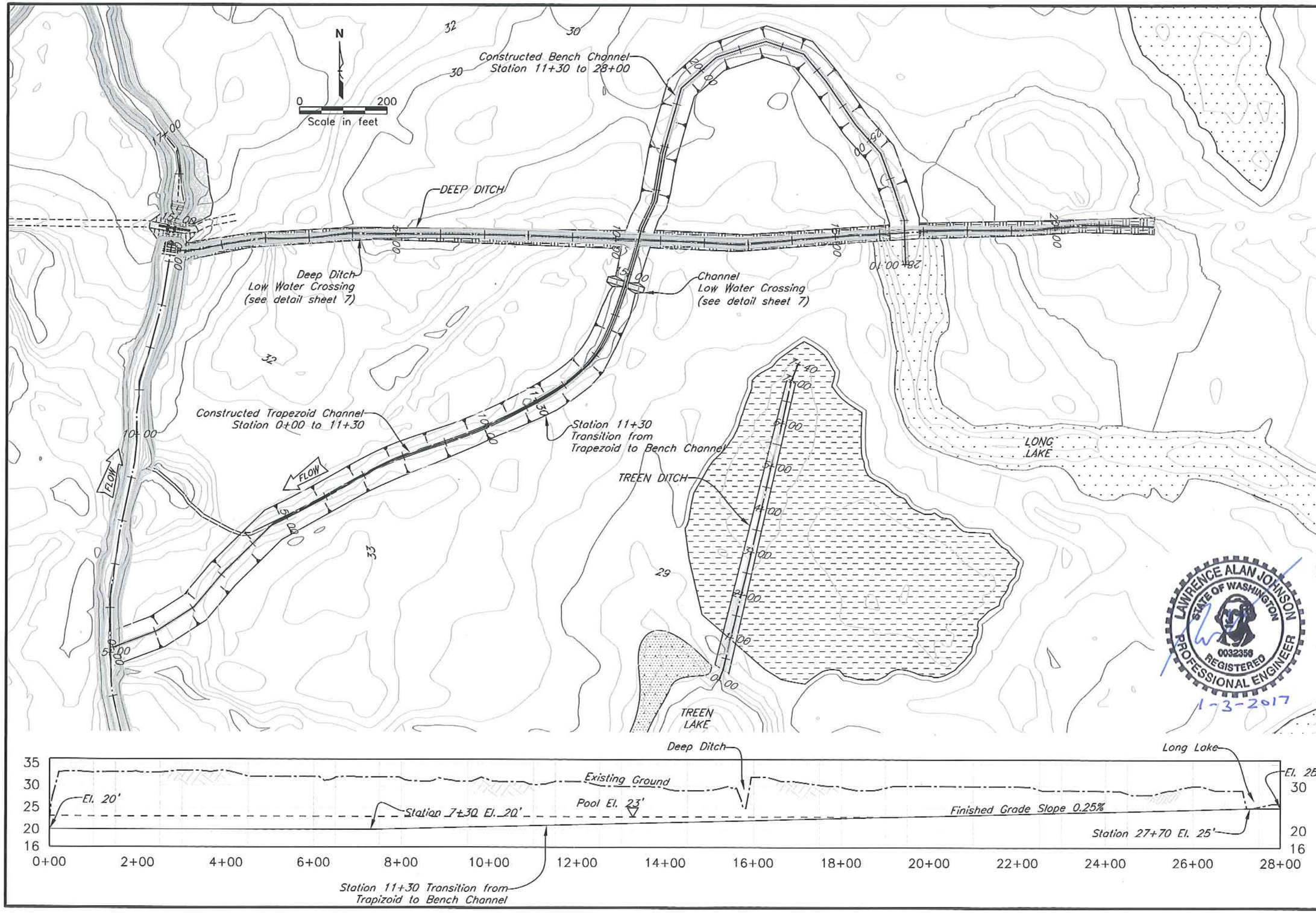

		Date
Designed	LAJ / EAF	Jan 2014
Drawn	WDD	Mar 2014
Checked	KAS	Mar 2014
Approved		Mar 2014

PEARSON EDDY WRP
CHANNEL PLAN PROFILE

Snohomish County, Washington

NRCS
Natural Resources Conservation Service
United States Department of Agriculture

File Name
PEARSON EDDY

Drawing Name
DE-LEVELING

Sheet 8 of 13

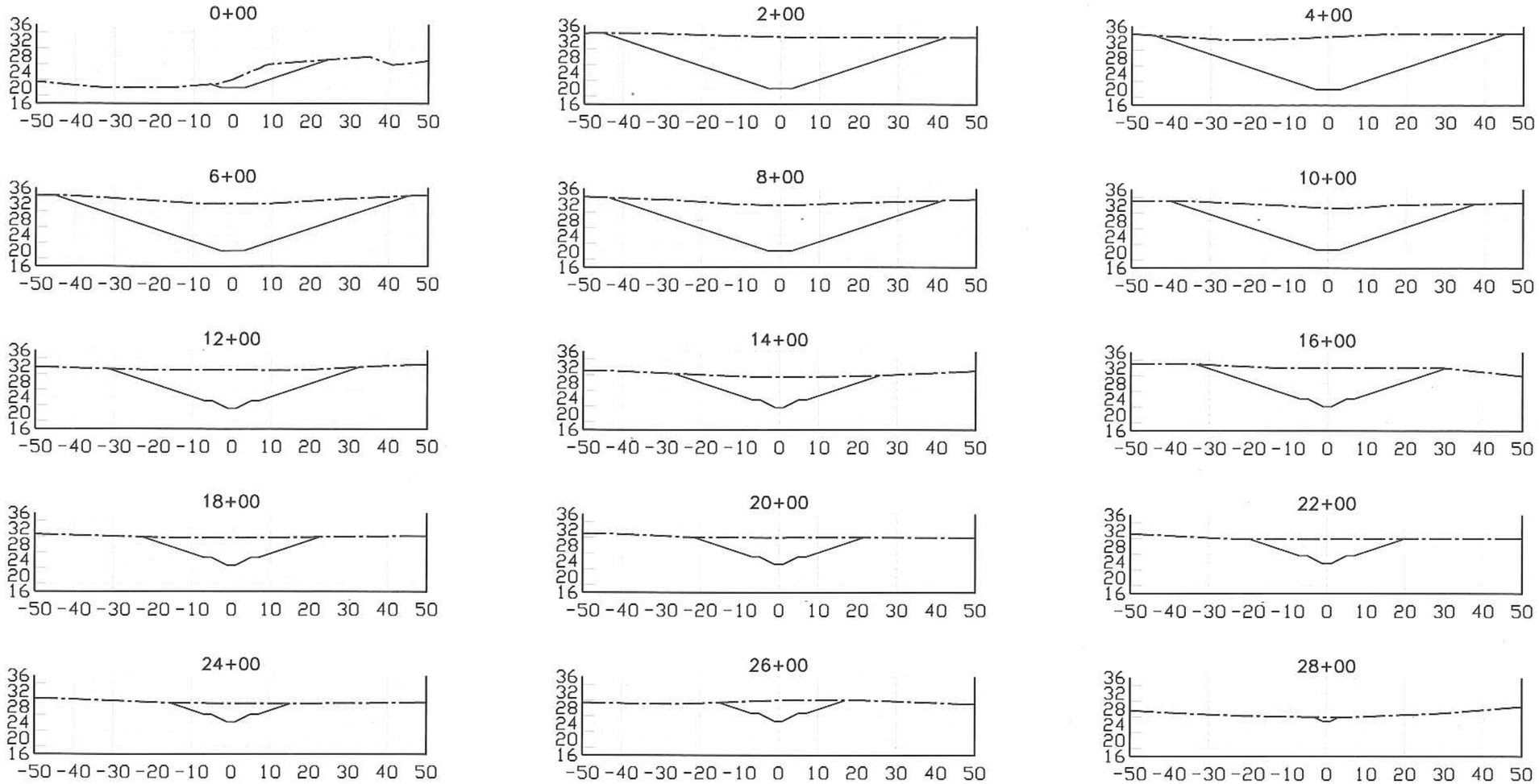

CHANNEL CROSS – SECTIONS

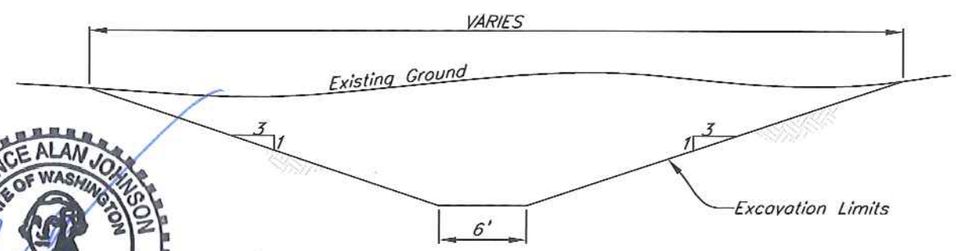

TRAPEZOID CHANNEL
STATION 0+00 TO 11+30

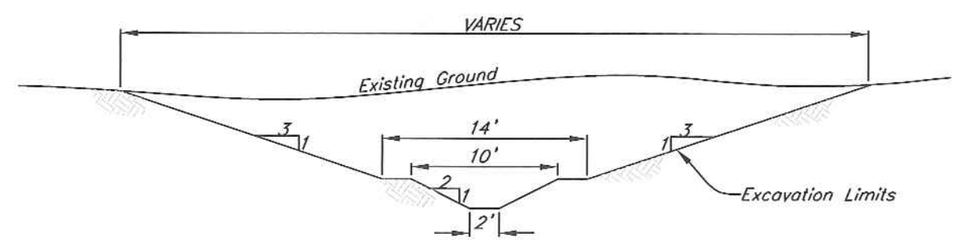

BENCH CHANNEL
STATION 11+30 TO 28+00

Construction Note:
All slopes/surfaces shall have a rough finish

TYPICAL CHANNEL CROSS SECTION VIEWS

LAWRENCE ALAN JOHNSON
STATE OF WASHINGTON
0032356
REGISTERED
PROFESSIONAL ENGINEER
1-3-2017

		Date
Designed	LAJ / EAF	Jan 2014
Drawn	WDD	Mar 2014
Checked	KAS	Mar 2014
Approved		Mar 2014

PEARSON EDDY WRP
CHANNEL CROSS SECTIONS
Snohomish County, Washington

NRCS
Natural Resources Conservation Service
United States Department of Agriculture

File Name
PEARSON EDDY
Drawing Name
CHANNEL DETAIL

DEEP DITCH PLAN VIEW

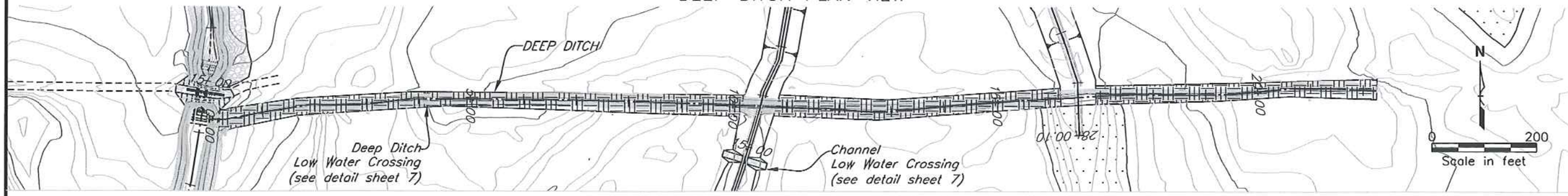

DEEP DITCH FILL PROFILE

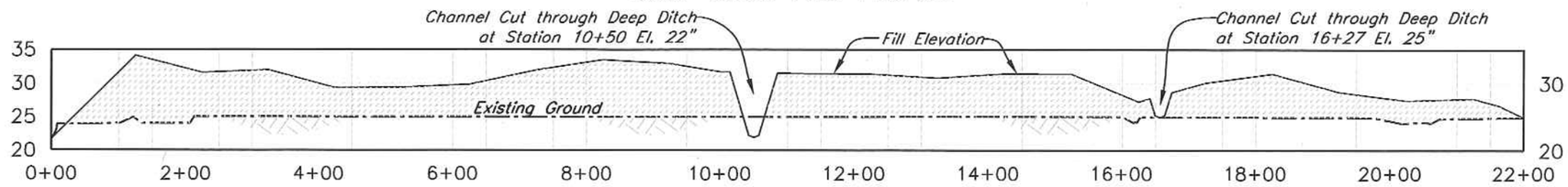

DEEP DITCH CROSS SECTIONS

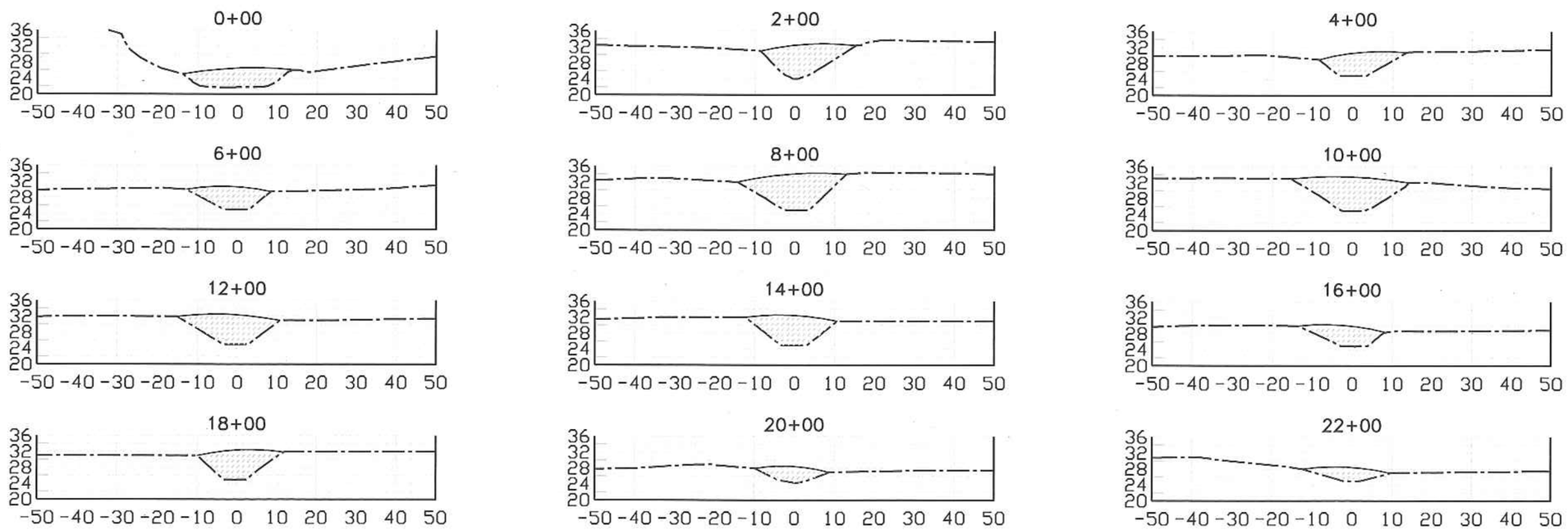

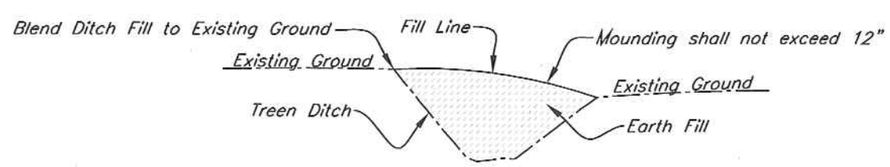

TYPICAL DEEP DITCH EARTH FILL CROSS SECTION

LAWRENCE ALAN JOHNSON
STATE OF WASHINGTON
0032356
REGISTERED
PROFESSIONAL ENGINEER
1-3-2017

		Date
Designed	LAJ / EAF	Jan 2014
Drawn	WDD	Mar 2014
Checked	KAS	Mar 2014
Approved	R.L.R.	Mar 2014

PEARSON EDDY WRP
DEEP DITCH DETAILS
Snohomish County, Washington

NRCS
Natural Resources Conservation Service
United States Department of Agriculture

File Name
PEARSON EDDY
Drawing Name
DEEP DITCH

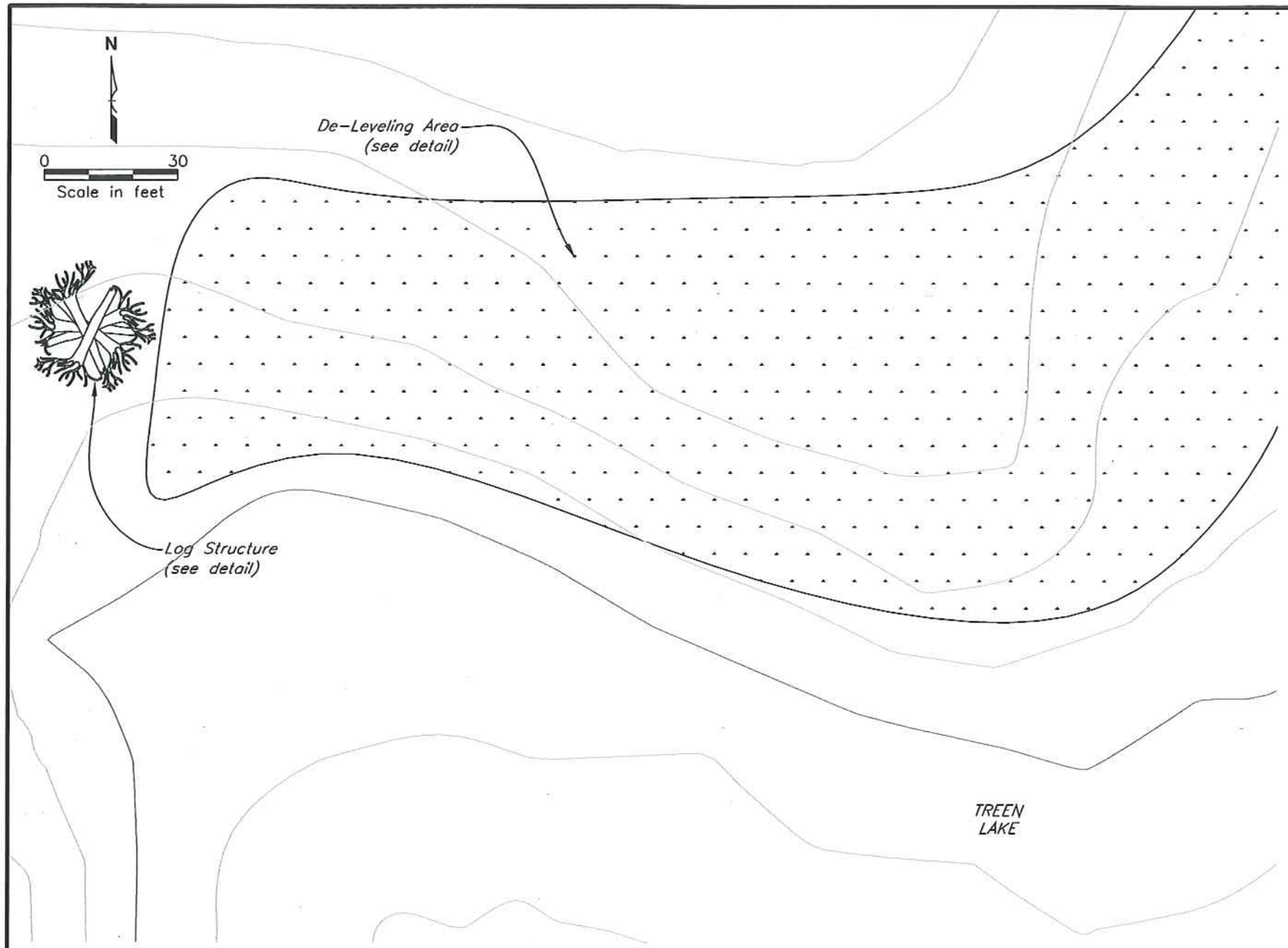

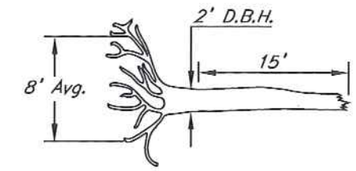

TYPICAL LOG DETAIL

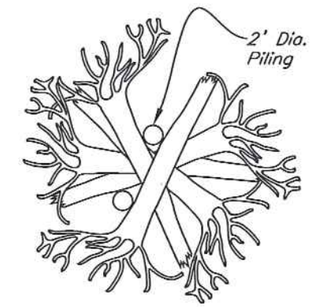

TYPICAL LOG STRUCTURE DETAIL

LAWRENCE ALAN JOHNSON
STATE OF WASHINGTON
0032358
REGISTERED
PROFESSIONAL ENGINEER
1-3-2017

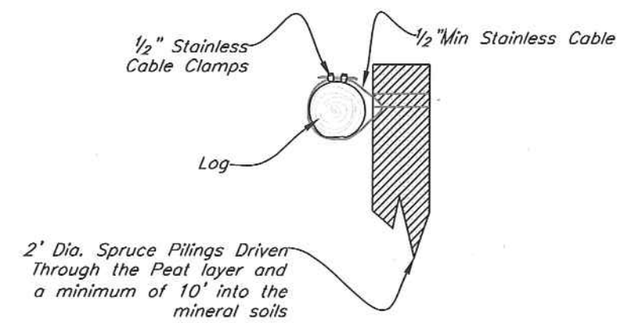

ANCHOR DETAIL

CONSTRUCTION NOTE:

Mounds shall be compacted with construction equipment in such a way that they are discontinuous and do not interfere with site drainage.

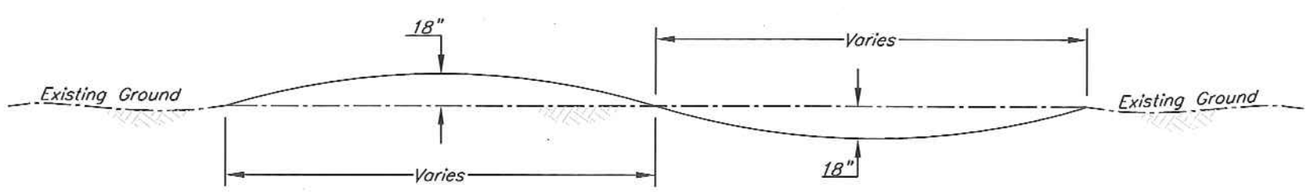

TYPICAL DE-LEVELING DETAIL
NTS

CONSTRUCTION NOTES:

1. The log structures shall consist of a minimum of 5 logs with root wads, and 2 pilings (see typical detail)
2. All logs in the structure shall be cabled together and anchored to all pilings to distribute the load evenly and ensure logs do not move off site or move around within the site.
3. Pilings shall be a minimum of 2' diameter and shall be driven 10' into the mineral soil.
4. The structure design (number and diameter of pilings) may be modified based on the material delivered to the site. Once available materials are stockpiled on the site, NRCS shall review them and adjust the design accordingly. Any design modifications shall be approved and signed by the NRCS prior to installation of log structures.
5. Logs shall be placed in a manner to promote interlocking while maintaining a minimal structure height

		Date
Designed	LAJ / EAF	Jan 2014
Drawn	WDD	Mar 2014
Checked	KAS	Mar 2014
Approved		Mar 2014

PEARSON EDDY WRP
DE-LEVELING & LOG STRUCTURE DETAIL
Snohomish County, Washington

NRCS
Natural Resources Conservation Service
United States Department of Agriculture

File Name
PEARSON EDDY

Drawing Name
DE-LEVELING

Sheet 11 of 13

MINIMUM EROSION AND SEDIMENTATION CONTROL REQUIREMENTS:

1. Stabilization and Sediment Trapping. All exposed and unworked soils, including soil stockpiles, shall be stabilized by suitable application of BMP's which protect soil from the erosive forces of raindrop impact and flowing water. Applicable practices include, but are not limited to, vegetative establishment, mulching, plastic covering and the early application of gravel base on areas to be paved. From October 1st to April 30th, no soils shall remain unstabilized for more than two days. From May 1st to September 30th, no soils shall remain unstabilized for more than seven days. At all times of the year, the contractor shall have sufficient materials, equipment and labor on-site to stabilize and prevent erosion from all denuded area within 12 ours as site and weather conditions dictate.
   From October 1st to April 30th, the project engineer shall visit the development site a minimum of once per week for the purpose of inspection the erosion and sedimentation control facilities, reviewing the progress of construction and verifying the effectiveness of the erosion control measures being undertaken. The project engineer shall immediately inform the project director of any problems or potential problems observed during said site visits, as well as of any recommended changes in the erosion control measures to be undertaken. When requested by the project director, the project engineer shall provide the project director with written records of said weekly site visits, including dates of visits and noted site observations.
2. Delineation of clearing and easement limitation. Clearing limits, setbacks, buffers and sensitive or critical areas such as steep slopes, wetlands and riparian corridors shall be clearly marked in the field and inspected by the project engineer prior to commencement of land clearing activities.
3. Protection of adjacent properties. Adjacent properties shall be protected from sediment deposition by appropriate use of vegetative buffer strips, sediment barriers or filters, dikes or mulching or by a combination of these measures and other appropriate BMP's.
4. Timing and stabilization of sediment trapping measures. Sediment ponds and traps, perimeter dikes, sediment barriers and other BMP's intended to trap sediment on site shall be constructed as a first step in grading. These BMP's shall be functional before land disturbing activities take please. Earthen structures such as dams, dikes and diversions shall be stabilized according to the timing indicated in item (1) above.
5. Slope stabilization. Cut and fill slopes shall be constructed in a manner that will minimize erosion. Roughened souls surfaces are preferred to smooth surfaces. Interception should be constructed at the top of long, steep slopes which have significant areas above that contribute runoff. Concentrated runoff should not be allowed to flow down the face of a cut or fill slope unless contained within an adequate channel or pipe slope drain. Wherever a slope face crosses a water seepage plane, adequate drainage or other protection should be provided. In additional, slopes should be stabilized in accordance with item (1) above.
6. Controlling off-site erosion. Properties and waterways downstream from development sites shall be protected from erosion due to increases in the volume, velocity and peak flow rate of stormwater runoff from the development site by the implementation of appropriate BMP's to minimize adverse downstream impacts.
7. Stabilization of temporary conveyance channels and outlets. All temporary on-site conveyance channels shall be designed, constructed and stabilized to prevent erosion from the expected flow velocity from a 2-year frequency 24-hour duration storm for the post-development condition. Stabilization adequate to prevent erosion of outlets, adjacent stream banks, slopes and downstream reaches shall e provided at the outlets of all conveyance systems.
8. Storm drain inlet protection. All storm drain inlets made operable during construction shall be protected so that stormwater runoff shall not enter the conveyance system without first being filtered or otherwise treated to remove sediment. After proper written application, the requirement for inlet protection may be waived by the director on a site-specific basis when the conveyance system downstream of the inlet discharges to an appropriate sediment containment BMP and the conveyance system can be adequately cleaned following site stabilization.
9. Underground utility construction. The construction of underground utility lines shall be limited, where feasible, to no more than 500 feet of open trench at one time. Where consistent with safety and space considerations, excavated material shall be placed on the uphill side of the trench. Dewatering devices shall discharge to an appropriate sediment trap or pond, preceded by adequate energy dissipation, prior to leaving the site.
10. Constructed access routes. Wherever construction vehicle access routes intersect paved roads, provisions must be made to minimize the transport of sediment (mud) onto the paved road by use of appropriate BMP's such as a stabilized constructed entrance. If sediment is transported onto a road surface, the roads shall be cleaned thoroughly. As a minimum, at the end of each day, sediment shall be removed from roads by shoveling or sweeping and be transported to a controlled sediment disposal area. Street washing shall be allowed only after sediment is removed in this manner
11. Removal of temporary BMP's. All temporary erosion and sediment control BMP's shall be removed within 30 days after final site stabilization is achieved or after the temporary BMP's are no longer needed. Trapped sediment shall be removed or stabilized on-site. Disturbed soil areas resulting from removal of temporarily BMP's shall be permanently stabilized. The removal of temporarily erosion and sediment control BMP's may not be required for those projects, such as single family plats, that will be followed by additional construction under a different permit. In these instances, the need for removing or retaining the measures will be evaluated on a site-specific basis.
12. Dewatering construction sites. Dewatering devices shall discharge into an appropriate sediment trap or pond, designed to accept such a discharge, preceded by adequate energy disapation, prior to runoff leaving the site.
13. Control of pollutants other than sediment on construction sites. All other pollutants other than sediment that occur on-site during construction shall be handled and legally imposed of in a manner that does not cause contamination of storm or surface waters. Pollutants of concern include, but are not limited to, fuels, lubricants, solvents, concrete bi-products and construction materials.
14. Maintenance. All temporarily and permanent erosion and sediment control BMP's shall be maintained and repaired as needed to assure continued performance of their intended function. The applicant shall be responsible for assuring that any such facilities damaged during floods, storms or other adverse weather conditions are immediately returned to normal operating condition.

GENERAL EROSION AND SEDIMENTATION CONTROL NOTES:

The following erosion and sedimentation control notes apply to all construction site activities at all times, unless otherwise specified on these plans:

1. The owner and his/her contractor shall be responsible at all times for preventing silt-laden runoff from discharging from the project site. Failure by the owner and/or contractor can result in a fine. The designated temporary contact person notes on this plan must be available for contact by phone on a 24 hour basis throughout construction and until the project has been completed and accepted by the project director.
2. The implementation of these ESC plans and the construction, maintenance, replacement and upgrading of facilities is the responsibility of the owner and/or contractor from the beginning of construction until all construction is completed and accepted by the project director and the site is stabilized.
3. Prior to beginning any work on the project site, a pre-construction conference must be held and shall be attended by the general contractor, the project engineer, representatives from affected utilities and the project director.
4. The erosion and sedimentation control facilities show on this plan are considered to be adequate basic requirements for the anticipated site conditions. During construction, deviations from this plan may be necessary in order to maintain water quality. Minor departures from this plan are permitted subject to the approval of the county inspector. However, except for emergency situations, all other deviations from this plan must be designed by the project engineer and approved by the project director.
5. All erosion and sedimentation control measures shall be inspected by the owner and/or contractor on a frequent basis and immediately after each rainfall and shall be maintained as necessary to insure their continued functioning. All sediment must be removed from silt fences, straw bales, sediment ponds, etc prior to the sediment reaching 8 inches in depth.
6. at no time shall concrete, concrete byproducts, vehicle fluids, chemicals or other polluting matter be permitted to discharge into the temporary or permanent drainage system or to discharge from the project site.

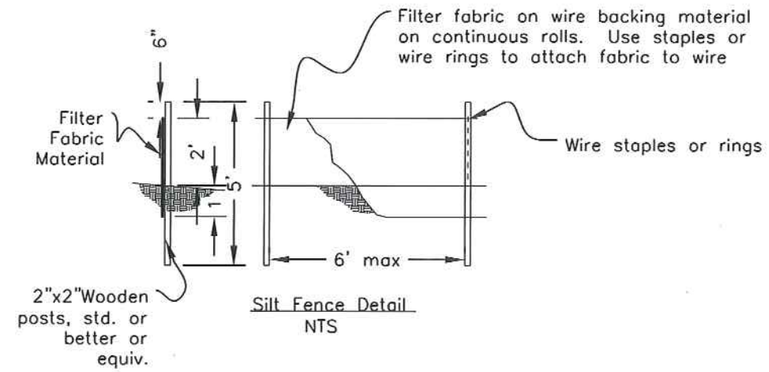

Silt Fence Detail
NTS

NOTES:

- Contractor shall use silt fence within work area as required.
- Install silt fencing along the outlet end of the new channel and backfilled channels. Silt fence shall also be installed around de-leveling areas as needed to ensure sediment does not run to streams or waterways.

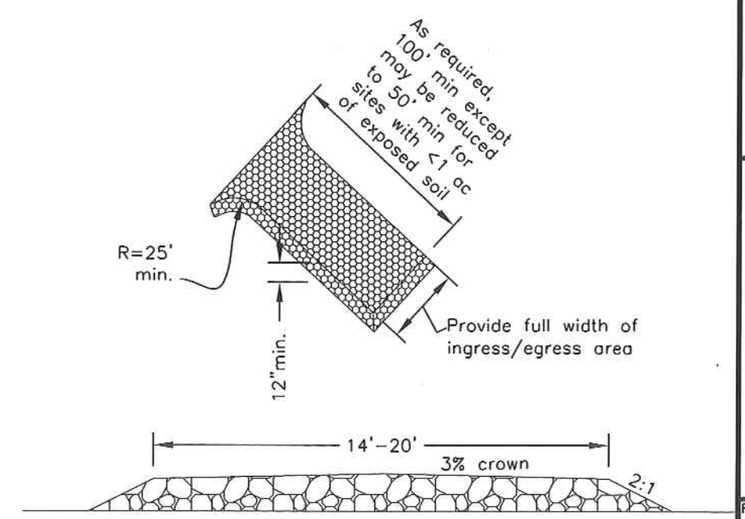

Typical Section-Temporary Access Road

Typical haul road cross section 12" to 24" deep bank run gravel laid on 30' wide Mirafy 500-X geotextile fabric-remove haul road after completion of excavation. re-grade site to original grade

		Date
Designed	EAF	2/2013
Drawn	EAF	2/2013
Checked	LAS	1/2017
Approved	[illegible]	1/2017

PEARSON'S EDDY WRP
SEDIMENT AND ERROSION CONTROL PLAN
GENERAL REQUIREMENTS

NRCS
Natural Resources Conservation Service
United States Department of Agriculture

File Name
PEDDYSECP.DWG
Drawing Name

SITE SPECIFIC SEDIMENT AND EROSION CONTROL MEASURES:

General:
1. Silt fence shall be placed as indicated on the Sediment and Erosion Control Site Plan.
2. All sediment and erosion control measures recommended or required by WDFW shall be implemented
3. Work shall proceed during low flow or no flow conditions to the extend possible to minimize site runoff.
4. All disturbed areas shall be seeded in accordance to Critical Area Planting specification.
5. After construction, the site shall be planted in accordance to the attached Planting Plan

Channel Crossing:
1. All access road areas within the flood plain shall be installed according to the 'Temporary Access Road Detail' on sheet 9 of 10.
2. The Pearson Eddy Channel shall be dewatered in accordance to the WDFW requirements prior to the start of work. De-watering structures shall be placed downstream of the scour work and upstream of the proposed crossing.
3. Fish removal, if needed, shall be completed in accordance to the WDFW requirements prior to the start of work on the site.
4. All material removed from the bank and existing crossing shall be stockpiled in the field as needed and used on site for the plugging of the Deep Ditch channel.

Deep Ditch, New Channel and De-Leveling:
1. The new channel shall be excavated but not connected to the Pearson Eddy Channel until all work and seeding is completed.
2. All fill shall be placed in the ditch fill sections shown on the site plan.
3. All exposed areas shall be seeded in accordance to the attached Critical Area Planting specification.
4. The new channel shall be connected to the Pearson Eddy channel during low flows. If the grass has not grown up, silt fence shall be placed as needed to minimize runoff.

MAINTENANCE STANDARDS
1. Quarry spalls (or hog fuel) shall be added as needed to keep the pad in accordance with the specifications.
2. If the entrance is not preventing sediment from being tracked onto pavement, then alternative measures to keep the streets free of sediment shall be used. This may include street sweeping, an increase in the dimensions of the entrance, or the installation of a wheel wash. If washing is used, it shall be done on an area covered with crushed rock and wash water shall drain into a sediment trap.
3. Any sediment that is tracked onto pavement shall be removed immediately by sweeping. The sediment collected by sweeping shall be removed or stabilized on-site. The pavement shall not be cleaned by washing down the street, except when sweeping is ineffective and there is a threat to public safety. If it is necessary to wash the streets, the construction of a small sump shall be considered. The sediment would be washed into the sump.
4. Any rock spalls that are loosened from the pad and end up on the road shall be removed
5. If vehicles are entering or exiting the site at points other than the construction entrance(s), fencing shall be installed to control traffic.

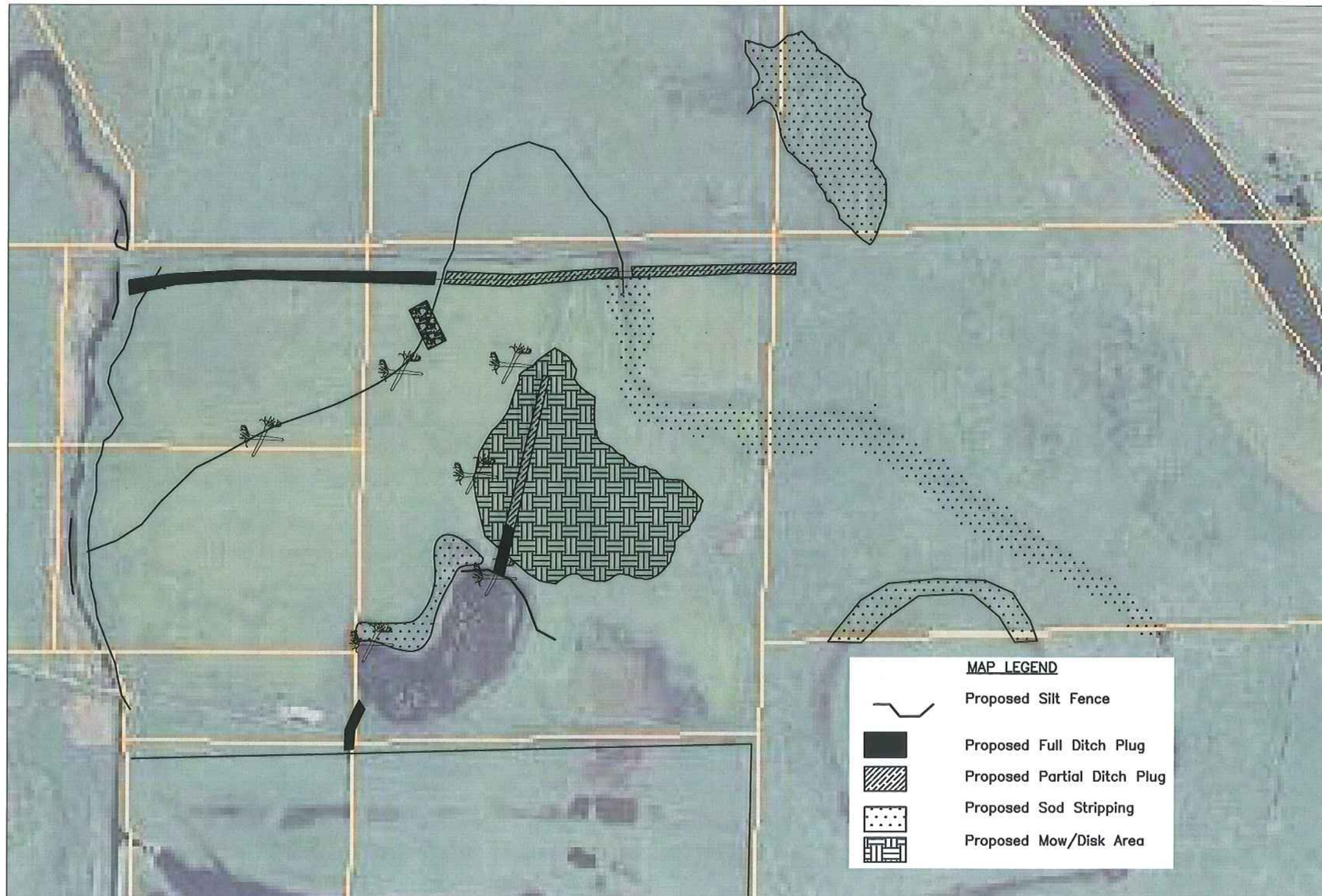

		Date
Designed	EAF	2/2013
Drawn	EAF	2/2013
Checked	LWJ	1/2017
Approved	L. Johnson	1/2017

PEARSON'S EDDY WRP
SEDIMENT AND ERROSION CONTROL PLAN
GENERAL REQUIREMENTS

NRCS
Natural Resources Conservation Service
United States Department of Agriculture

File Name
PEDDYSECP.DWG
Drawing Name