Appendix C. Support Maps

Table of Contents

Map 4 – Geology Map

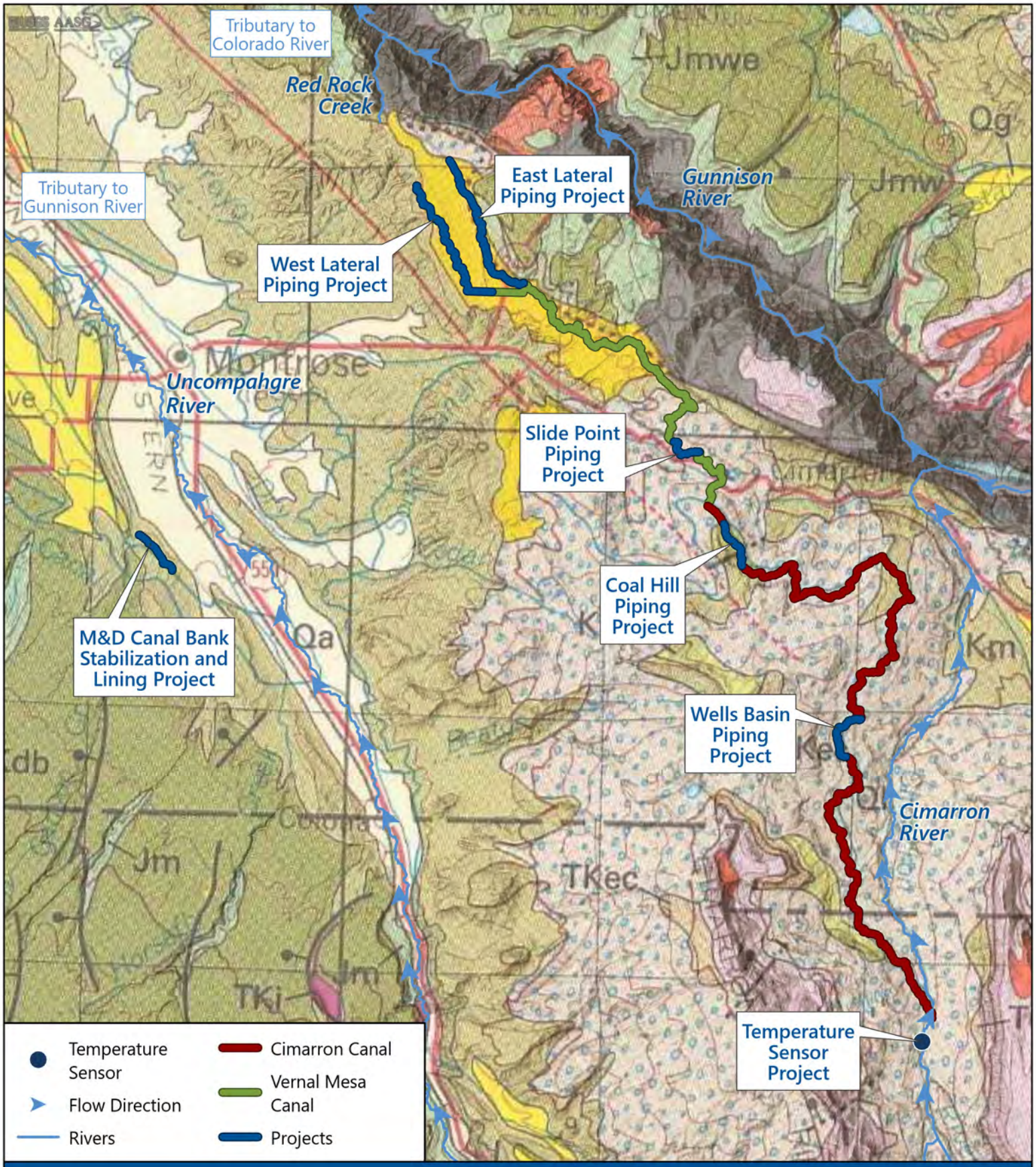

USGS GEOLOGY MAP

Soil data obtained from the USGS.

0 3
Miles

N

November 2024

BPWCD Watershed Plan-EA

Map 5 – Fault Map

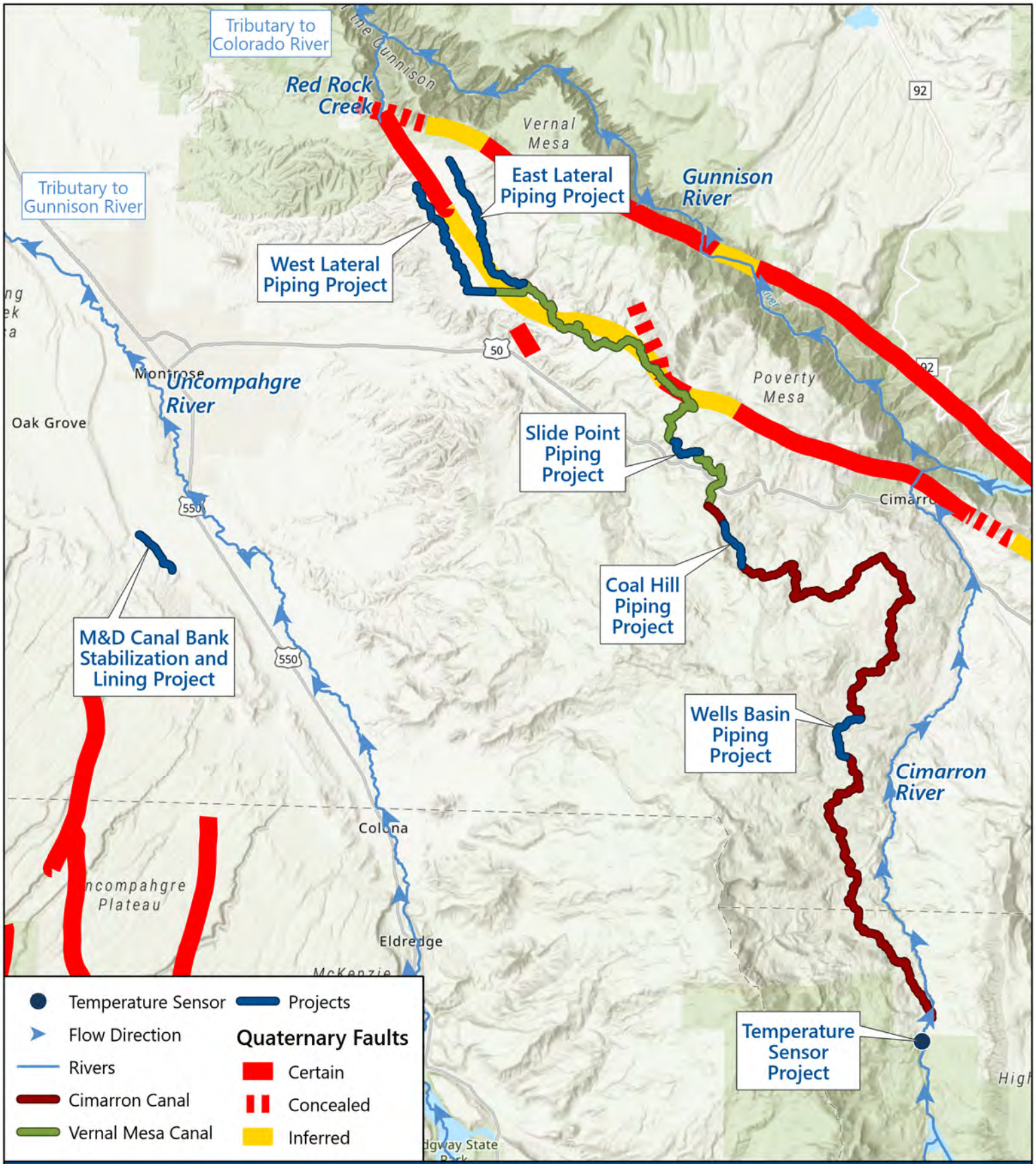

0 3 Miles

N

November 2024

FAULTS MAP

Fault data sourced from Colorado Earthquake and Fault Map Server online map.

BPWCD Watershed Plan-EA

Map 6 – Soil Maps

Soil Map—Ouray Area, Colorado, Parts of Gunnison, Hinsdale, Ouray, San Juan, and San Miguel Counties; and ...
(BPWCD Cimarron River and Lower Uncompahgre Watershed Project)

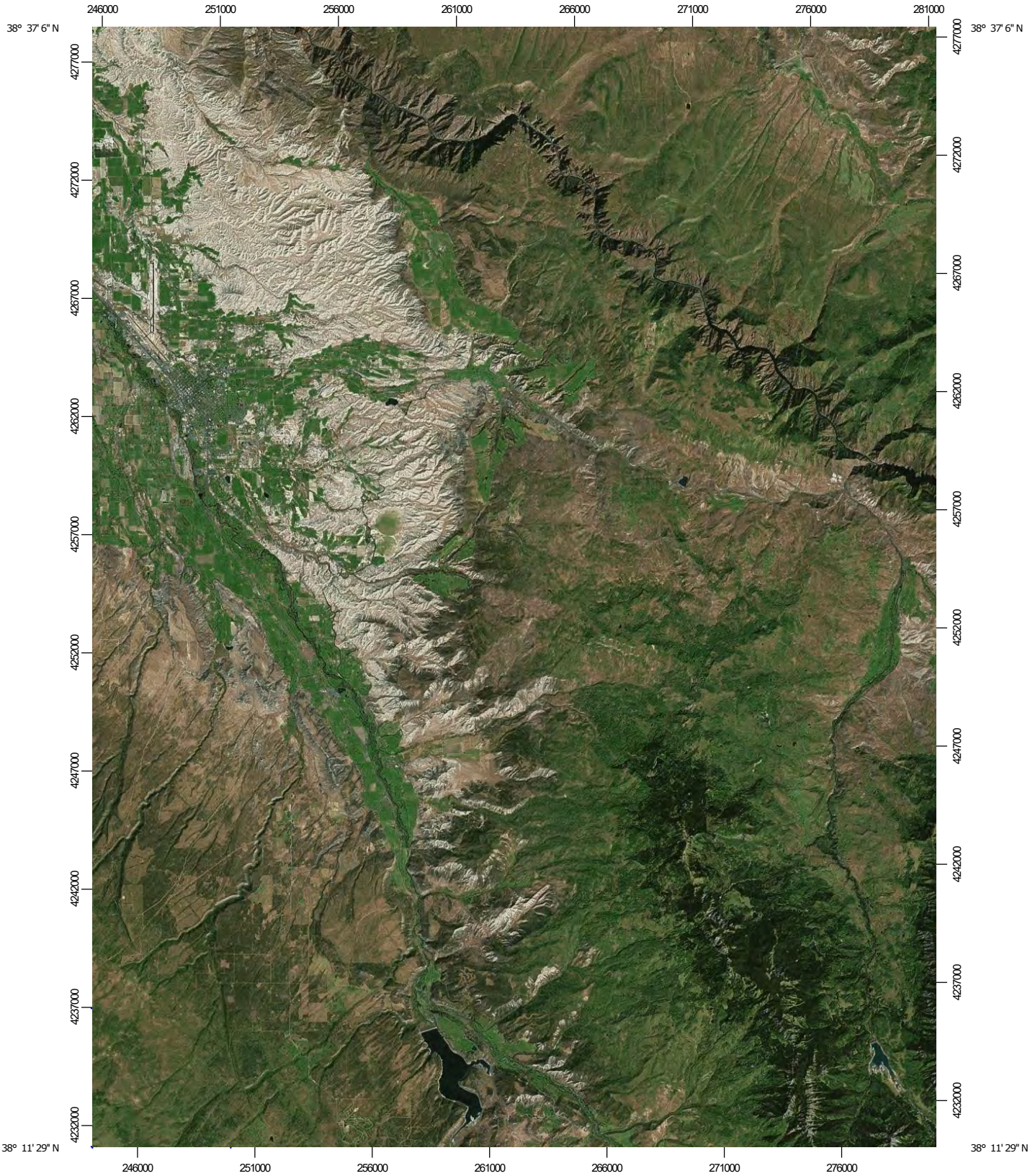

Map Scale: 1:231,000 if printed on A portrait (8.5" x 11") sheet.

N

Meters: 0 3000 6000 12000 18000

Feet: 0 10000 20000 40000 60000

Map projection: Web Mercator Corner coordinates: WGS84 Edge tics: UTM Zone 13N WGS84

MAP LEGEND

Area of Interest (AOI)

- Area of Interest (AOI)

Soils

- Soil Map Unit Polygons
- Soil Map Unit Lines
- Soil Map Unit Points

Special Point Features

- Blowout
- Borrow Pit
- Clay Spot
- Closed Depression
- Gravel Pit
- Gravelly Spot
- Landfill
- Lava Flow
- Marsh or swamp
- Mine or Quarry
- Miscellaneous Water
- Perennial Water
- Rock Outcrop
- Saline Spot
- Sandy Spot
- Severely Eroded Spot
- Sinkhole
- Slide or Slip
- Sodic Spot
- Spoil Area
- Stony Spot
- Very Stony Spot
- Wet Spot
- Other
- Special Line Features

Water Features

- Streams and Canals

Transportation

- Rails
- Interstate Highways
- US Routes
- Major Roads
- Local Roads

Background

- Aerial Photography

MAP INFORMATION

The soil surveys that comprise your AOI were mapped at 1:24,000.

Please rely on the bar scale on each map sheet for map measurements.

Source of Map: Natural Resources Conservation Service
Web Soil Survey URL:
Coordinate System: Web Mercator (EPSG:3857)

Maps from the Web Soil Survey are based on the Web Mercator projection, which preserves direction and shape but distorts distance and area. A projection that preserves area, such as the Albers equal-area conic projection, should be used if more accurate calculations of distance or area are required.

This product is generated from the USDA-NRCS certified data as of the version date(s) listed below.

Soil Survey Area: Ouray Area, Colorado, Parts of Gunnison, Hinsdale, Ouray, San Juan, and San Miguel Counties
Survey Area Data: Version 14, Sep 6, 2022

Soil Survey Area: Ridgway Area, Colorado, Parts of Delta, Gunnison, Montrose, and Ouray Counties
Survey Area Data: Version 14, Sep 6, 2022

Your area of interest (AOI) includes more than one soil survey area. These survey areas may have been mapped at different scales, with a different land use in mind, at different times, or at different levels of detail. This may result in map unit symbols, soil properties, and interpretations that do not completely agree across soil survey area boundaries.

Soil map units are labeled (as space allows) for map scales 1:50,000 or larger.

Date(s) aerial images were photographed: Jan 1, 1999—Dec 31, 2003

The orthophoto or other base map on which the soil lines were compiled and digitized probably differs from the background imagery displayed on these maps. As a result, some minor shifting of map unit boundaries may be evident.

Map Unit Legend

Map Unit Symbol	Map Unit Name	Acres in AOI	Percent of AOI
912	Frisco, very stony-Rock outcrop-Silverjack complex, 30 to 60 percent slopes	0.1	0.2%
Subtotals for Soil Survey Area		**0.1**	**0.2%**
Totals for Area of Interest		**31.8**	**100.0%**

Map Unit Symbol	Map Unit Name	Acres in AOI	Percent of AOI
770A	Xeribrush-Mudcap complex, 0 to 4 percent slopes	0.3	0.9%
771	Xeribrush loam, 4 to 12 percent slopes	10.6	33.3%
790	Briny clay loam, 0 to 3 percent slopes, rarely flooded	0.3	1.0%
809	Persayo-Briny, rarely flooded complex, 0 to 25 percent slopes	1.9	6.1%
830	Xeribrush, extremely stony-Signalhill, very stony complex, 8 to 45 percent slopes	7.0	22.0%
841	Wellsbasin-Xeribrush complex, 3 to 25 percent slopes, extremely stony	0.8	2.6%
842	Parkelei-Signalhill, very stony complex, 3 to 15 percent slopes	1.2	3.8%
896	Barboncito, extremely flaggy-Badland complex, 15 to 65 percent slopes	0.9	2.9%
919	Beachcanyon, extremely bouldery-Gothic-Woodhall, rubbly complex, 10 to 50 percent slopes	0.2	0.8%
928	Cerro-Swansonlake complex, 1 to 45 percent slopes	5.1	16.2%
941	Cerro, extremely stony-Shermap-Curecanti complex, 3 to 25 percent slopes	1.2	3.7%
967	Cerro, very stony-Curecanti, extremely stony complex, 3 to 35 percent slopes	0.9	3.0%
987	Cerro-Curecanti, extremely stony complex, 15 to 60 percent slopes	1.1	3.6%
Subtotals for Soil Survey Area		**31.7**	**99.8%**

Totals for Area of Interest		**31.8**	**100.0%**

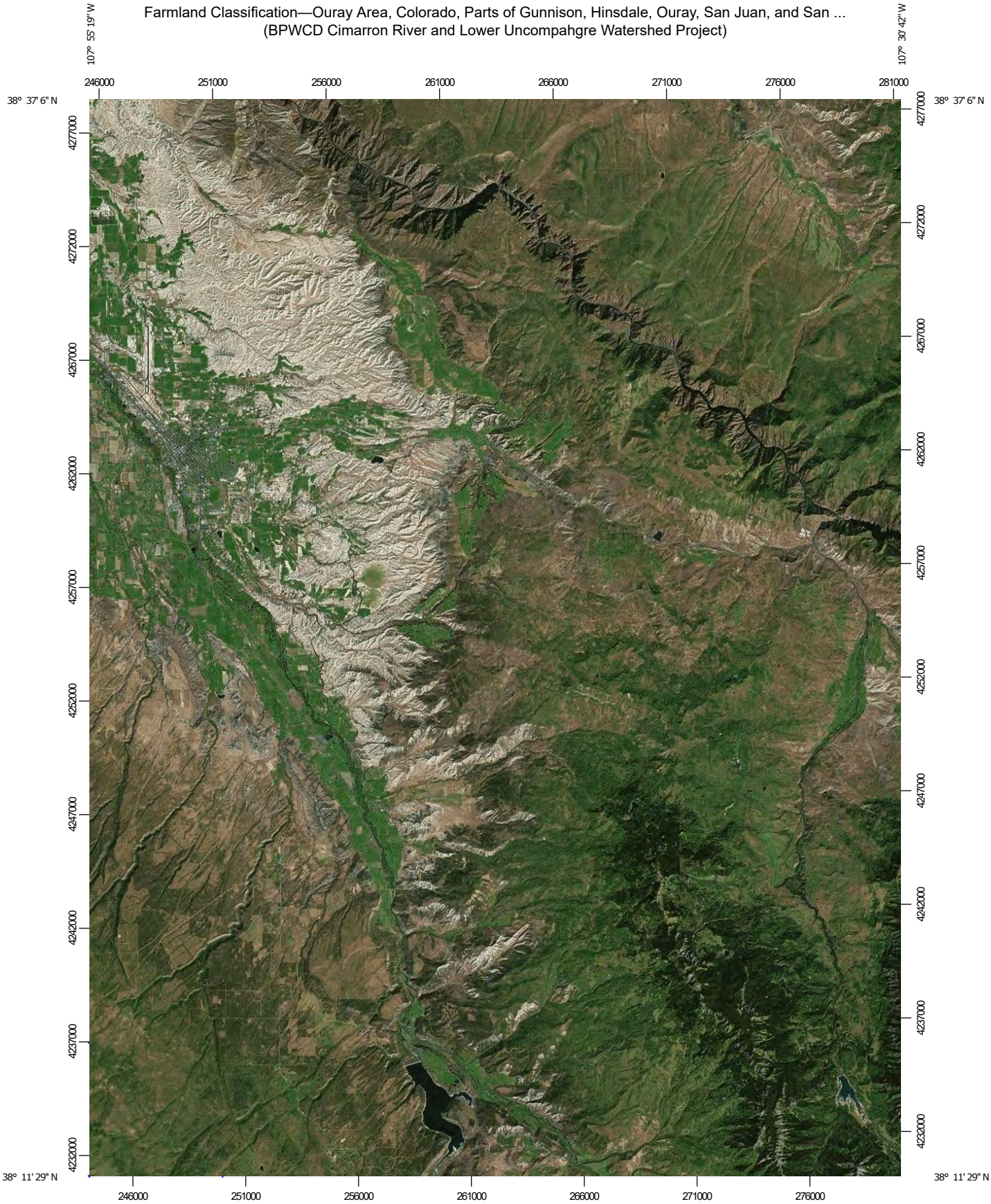

Map Scale: 1:231,000 if printed on A portrait (8.5" x 11") sheet.

N

Meters: 0 3000 6000 12000 18000

Feet: 0 10000 20000 40000 60000

Map projection: Web Mercator Corner coordinates: WGS84 Edge tics: UTM Zone 13N WGS84

MAP LEGEND

Area of Interest (AOI)

- Area of Interest (AOI)

Soils

Soil Rating Polygons

- Not prime farmland
- All areas are prime farmland
- Prime farmland if drained
- Prime farmland if protected from flooding or not frequently flooded during the growing season
- Prime farmland if irrigated
- Prime farmland if drained and either protected from flooding or not frequently flooded during the growing season
- Prime farmland if irrigated and drained
- Prime farmland if irrigated and either protected from flooding or not frequently flooded during the growing season
- Prime farmland if subsoiled, completely removing the root inhibiting soil layer
- Prime farmland if irrigated and the product of I (soil erodibility) x C (climate factor) does not exceed 60
- Prime farmland if irrigated and reclaimed of excess salts and sodium
- Farmland of statewide importance
- Farmland of statewide importance, if drained
- Farmland of statewide importance, if protected from flooding or not frequently flooded during the growing season
- Farmland of statewide importance, if irrigated
- Farmland of statewide importance, if drained and either protected from flooding or not frequently flooded during the growing season
- Farmland of statewide importance, if irrigated and drained
- Farmland of statewide importance, if irrigated and either protected from flooding or not frequently flooded during the growing season
- Farmland of statewide importance, if subsoiled, completely removing the root inhibiting soil layer
- Farmland of statewide importance, if irrigated and the product of I (soil erodibility) x C (climate factor) does not exceed 60
- Farmland of statewide importance, if irrigated and reclaimed of excess salts and sodium
- Farmland of statewide importance, if drained or either protected from flooding or not frequently flooded during the growing season
- Farmland of statewide importance, if warm enough, and either drained or either protected from flooding or not frequently flooded during the growing season
- Farmland of statewide importance, if warm enough
- Farmland of statewide importance, if thawed
- Farmland of local importance
- Farmland of local importance, if irrigated
- Farmland of unique importance
- Not rated or not available

Soil Rating Lines

- Not prime farmland
- All areas are prime farmland
- Prime farmland if drained
- Prime farmland if protected from flooding or not frequently flooded during the growing season
- Prime farmland if irrigated
- Prime farmland if drained and either protected from flooding or not frequently flooded during the growing season
- Prime farmland if irrigated and drained
- Prime farmland if irrigated and either protected from flooding or not frequently flooded during the growing season

- Prime farmland if subsoiled, completely removing the root inhibiting soil layer
- Prime farmland if irrigated and the product of I (soil erodibility) x C (climate factor) does not exceed 60
- Prime farmland if irrigated and reclaimed of excess salts and sodium
- Farmland of statewide importance
- Farmland of statewide importance, if drained
- Farmland of statewide importance, if protected from flooding or not frequently flooded during the growing season
- Farmland of statewide importance, if irrigated
- Farmland of statewide importance, if drained and either protected from flooding or not frequently flooded during the growing season
- Farmland of statewide importance, if irrigated and drained
- Farmland of statewide importance, if irrigated and either protected from flooding or not frequently flooded during the growing season
- Farmland of statewide importance, if subsoiled, completely removing the root inhibiting soil layer
- Farmland of statewide importance, if irrigated and the product of I (soil erodibility) x C (climate factor) does not exceed 60
- Farmland of statewide importance, if irrigated and reclaimed of excess salts and sodium
- Farmland of statewide importance, if drained or either protected from flooding or not frequently flooded during the growing season
- Farmland of statewide importance, if warm enough, and either drained or either protected from flooding or not frequently flooded during the growing season
- Farmland of statewide importance, if warm enough
- Farmland of statewide importance, if thawed
- Farmland of local importance
- Farmland of local importance, if irrigated
- Farmland of unique importance
- Not rated or not available

Soil Rating Points

- Not prime farmland
- All areas are prime farmland
- Prime farmland if drained
- Prime farmland if protected from flooding or not frequently flooded during the growing season
- Prime farmland if irrigated
- Prime farmland if drained and either protected from flooding or not frequently flooded during the growing season
- Prime farmland if irrigated and drained
- Prime farmland if irrigated and either protected from flooding or not frequently flooded during the growing season
- Prime farmland if subsoiled, completely removing the root inhibiting soil layer
- Prime farmland if irrigated and the product of I (soil erodibility) x C (climate factor) does not exceed 60
- Prime farmland if irrigated and reclaimed of excess salts and sodium
- Farmland of statewide importance
- Farmland of statewide importance, if drained
- Farmland of statewide importance, if protected from flooding or not frequently flooded during the growing season
- Farmland of statewide importance, if irrigated

- Farmland of statewide importance, if drained and either protected from flooding or not frequently flooded during the growing season
- Farmland of statewide importance, if irrigated and drained
- Farmland of statewide importance, if irrigated and either protected from flooding or not frequently flooded during the growing season
- Farmland of statewide importance, if subsoiled, completely removing the root inhibiting soil layer
- Farmland of statewide importance, if irrigated and the product of I (soil erodibility) x C (climate factor) does not exceed 60
- Farmland of statewide importance, if irrigated and reclaimed of excess salts and sodium
- Farmland of statewide importance, if drained or either protected from flooding or not frequently flooded during the growing season
- Farmland of statewide importance, if warm enough, and either drained or either protected from flooding or not frequently flooded during the growing season
- Farmland of statewide importance, if warm enough
- Farmland of statewide importance, if thawed
- Farmland of local importance
- Farmland of local importance, if irrigated
- Farmland of unique importance
- Not rated or not available

Water Features

- Streams and Canals

Transportation

- Rails
- Interstate Highways
- US Routes
- Major Roads
- Local Roads

Background

- Aerial Photography

The soil surveys that comprise your AOI were mapped at 1:24,000.

Please rely on the bar scale on each map sheet for map measurements.

Source of Map: Natural Resources Conservation Service
Web Soil Survey URL:
Coordinate System: Web Mercator (EPSG:3857)

Maps from the Web Soil Survey are based on the Web Mercator projection, which preserves direction and shape but distorts distance and area. A projection that preserves area, such as the Albers equal-area conic projection, should be used if more accurate calculations of distance or area are required.

This product is generated from the USDA-NRCS certified data as of the version date(s) listed below.

Soil Survey Area: Ouray Area, Colorado, Parts of Gunnison, Hinsdale, Ouray, San Juan, and San Miguel Counties
Survey Area Data: Version 14, Sep 6, 2022

Soil Survey Area: Ridgway Area, Colorado, Parts of Delta, Gunnison, Montrose, and Ouray Counties
Survey Area Data: Version 14, Sep 6, 2022

Your area of interest (AOI) includes more than one soil survey area. These survey areas may have been mapped at different scales, with a different land use in mind, at different times, or at different levels of detail. This may result in map unit symbols, soil properties, and interpretations that do not completely agree across soil survey area boundaries.

Soil map units are labeled (as space allows) for map scales 1:50,000 or larger.

Date(s) aerial images were photographed: Jan 1, 1999—Dec 31, 2003

The orthophoto or other base map on which the soil lines were compiled and digitized probably differs from the background imagery displayed on these maps. As a result, some minor shifting of map unit boundaries may be evident.

Farmland Classification

Map unit symbol	Map unit name	Rating	Acres in AOI	Percent of AOI
912	Frisco, very stony-Rock outcrop-Silverjack complex, 30 to 60 percent slopes	Not prime farmland	0.1	0.2%
Subtotals for Soil Survey Area			**0.1**	**0.2%**
Totals for Area of Interest			**35.2**	**100.0%**

Map unit symbol	Map unit name	Rating	Acres in AOI	Percent of AOI
770A	Xeribrush-Mudcap complex, 0 to 4 percent slopes	Farmland of statewide importance	0.3	0.8%
771	Xeribrush loam, 4 to 12 percent slopes	Farmland of statewide importance	10.6	30.1%
790	Briny clay loam, 0 to 3 percent slopes, rarely flooded	Not prime farmland	0.3	0.9%
809	Persayo-Briny, rarely flooded complex, 0 to 25 percent slopes	Not prime farmland	1.9	5.5%
830	Xeribrush, extremely stony-Signalhill, very stony complex, 8 to 45 percent slopes	Not prime farmland	7.0	19.8%
841	Wellsbasin-Xeribrush complex, 3 to 25 percent slopes, extremely stony	Not prime farmland	0.8	2.4%
842	Parkelei-Signalhill, very stony complex, 3 to 15 percent slopes	Not prime farmland	1.2	3.4%
896	Barboncito, extremely flaggy-Badland complex, 15 to 65 percent slopes	Not prime farmland	0.9	2.6%
919	Beachcanyon, extremely bouldery-Gothic-Woodhall, rubbly complex, 10 to 50 percent slopes	Not prime farmland	0.6	1.7%
928	Cerro-Swansonlake complex, 1 to 45 percent slopes	Not prime farmland	5.2	14.7%
941	Cerro, extremely stony-Shermap-Curecanti complex, 3 to 25 percent slopes	Not prime farmland	1.2	3.4%

Map unit symbol	Map unit name	Rating	Acres in AOI	Percent of AOI
967	Cerro, very stony-Curecanti, extremely stony complex, 3 to 35 percent slopes	Not prime farmland	3.2	9.2%
969	Gothic loam, 8 to 20 percent slopes	Not prime farmland	0.8	2.2%
987	Cerro-Curecanti, extremely stony complex, 15 to 60 percent slopes	Not prime farmland	1.1	3.2%
Subtotals for Soil Survey Area			**35.2**	**99.8%**
Totals for Area of Interest			**35.2**	**100.0%**

Description

Farmland classification identifies map units as prime farmland, farmland of statewide importance, farmland of local importance, or unique farmland. It identifies the location and extent of the soils that are best suited to food, feed, fiber, forage, and oilseed crops. NRCS policy and procedures on prime and unique farmlands are published in the "Federal Register," Vol. 43, No. 21, January 31, 1978.

Rating Options

Aggregation Method: No Aggregation Necessary

Aggregation is the process by which a set of component attribute values is reduced to a single value that represents the map unit as a whole.

A map unit is typically composed of one or more "components". A component is either some type of soil or some nonsoil entity, e.g., rock outcrop. For the attribute being aggregated, the first step of the aggregation process is to derive one attribute value for each of a map unit's components. From this set of component attributes, the next step of the aggregation process derives a single value that represents the map unit as a whole. Once a single value for each map unit is derived, a thematic map for soil map units can be rendered. Aggregation must be done because, on any soil map, map units are delineated but components are not.

For each of a map unit's components, a corresponding percent composition is recorded. A percent composition of 60 indicates that the corresponding component typically makes up approximately 60% of the map unit. Percent composition is a critical factor in some, but not all, aggregation methods.

The majority of soil attributes are associated with a component of a map unit, and such an attribute has to be aggregated to the map unit level before a thematic map can be rendered. Map units, however, also have their own attributes. An attribute of a map unit does not have to be aggregated in order to render a corresponding thematic map. Therefore, the "aggregation method" for any attribute of a map unit is referred to as "No Aggregation Necessary".

Tie-break Rule: Lower

The tie-break rule indicates which value should be selected from a set of multiple candidate values, or which value should be selected in the event of a percent composition tie.

Map 7 – Landslide Map

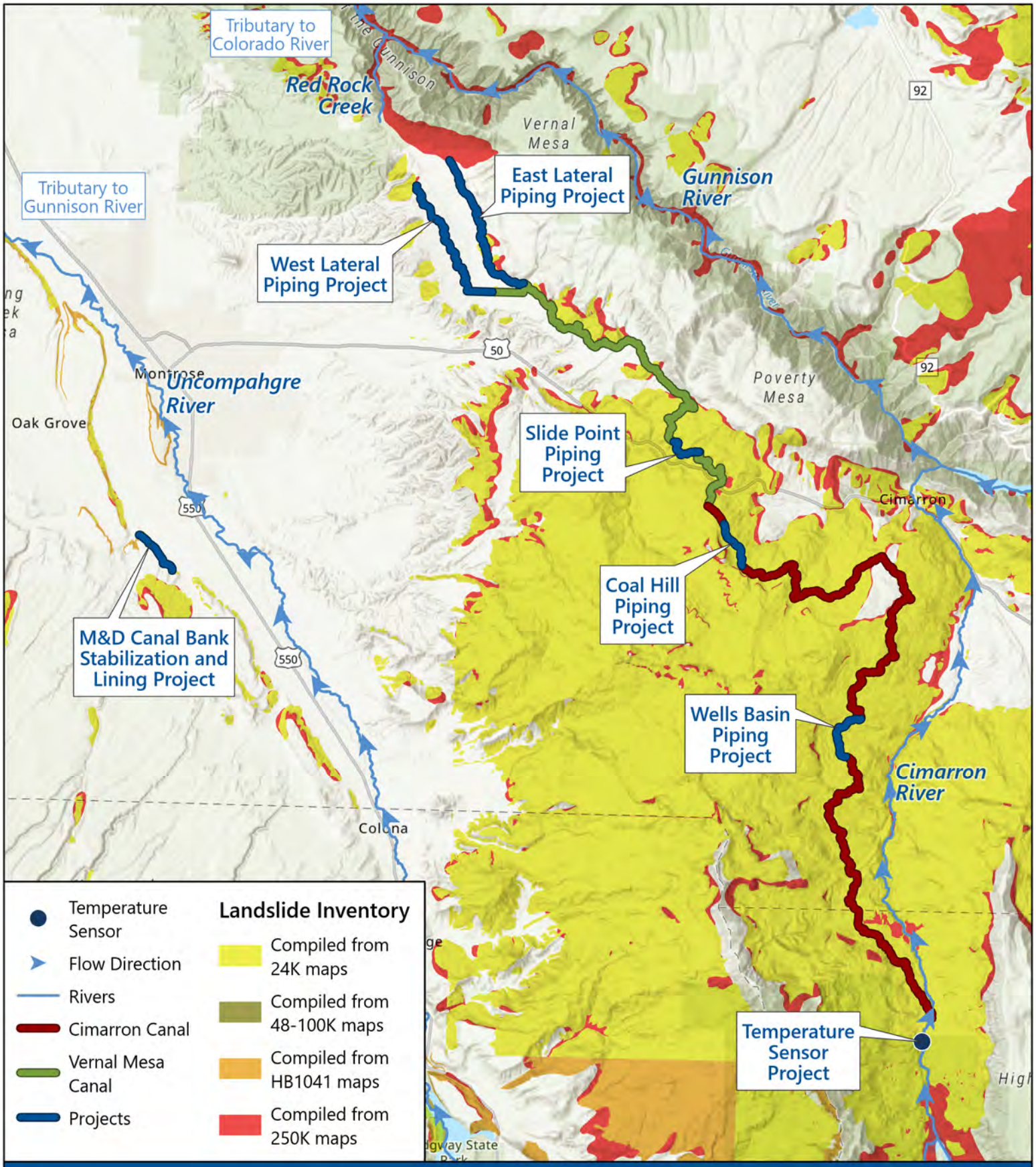

0 3
Miles

N

November 2024

LANDSLIDE MAP

Landslide data sourced from ON-006-01 Colorado Landslide Inventory online map.

BPWCD Watershed Plan-EA

Map 8 – FEMA FIRM Panels

107°54'22.97"W 38°26'21.61"N

107°52'29.61"W 38°24'15.93"N

FLOOD HAZARD INFORMATION

SEE FIS REPORT FOR DETAILED LEGEND AND INDEX MAP FOR DRAFT FIRM PANEL LAYOUT

SPECIAL FLOOD HAZARD AREAS	Without Base Flood Elevation (BFE) *Zone A, V, A99*
	With BFE or Depth *Zone AE, AO, AH, VE, AR*
	Regulatory Floodway
OTHER AREAS OF FLOOD HAZARD	0.2% Annual Chance Flood Hazard, Areas of 1% annual chance flood with average depth less than one foot or with drainage areas of less than one square mile *Zone X*
	Future Conditions 1% Annual Chance Flood Hazard *Zone X*
	Area with Reduced Flood Risk due to Levee See Notes *Zone X*
	Area with Flood Risk due to Levee *Zone D*
OTHER AREAS	NO SCREEN Area of Minimal Flood Hazard *Zone X*
	Effective LOMRs
	Area of Undetermined Flood Hazard *Zone D*
GENERAL STRUCTURES	Channel, Culvert, or Storm Sewer
	Levee, Dike, or Floodwall
OTHER FEATURES	B 20.2 Cross Sections with 1% Annual Chance
	17.5 Water Surface Elevation
	8 Coastal Transect
	Coastal Transect Baseline
	Profile Baseline
	Hydrographic Feature
	513 Base Flood Elevation Line (BFE)
	Limit of Study
	Jurisdiction Boundary

NOTES TO USERS

For information and questions about this Flood Insurance Rate Map (FIRM), available products associated with this FIRM, including historic versions, the current map date for each FIRM panel, how to order products, or the National Flood Insurance Program (NFIP) in general, please call the FEMA Map Information eXchange at 1-877-FEMA-MAP (1-877-336-2627) or visit the FEMA Flood Map Service Center website at https://msc.fema.gov. Available products may include previously issued Letters of Map Change, a Flood Insurance Study Report, and/or digital versions of this map. Many of these products can be ordered or obtained directly from the website.

Communities annexing land on adjacent FIRM panels must obtain a current copy of the adjacent panel as well as the current FIRM Index. These may be ordered directly from the Flood Map Service Center at the number listed above.

For community and countywide map dates, refer to the Flood Insurance Study Report for this jurisdiction.

To determine if flood insurance is available in this community, contact your Insurance agent or call the National Flood Insurance Program at 1-800-638-6620.

Basemap information shown on this FIRM was provided in digital format by the United States Geological Survey (USGS). The basemap shown is the USGS National Map: Orthoimagery. Last refreshed October, 2020.

This map was exported from FEMA's National Flood Hazard Layer (NFHL) on **5/28/2021 12:33 PM** and does not reflect changes or amendments subsequent to this date and time. The NFHL and effective information may change or become superseded by new data over time. For additional information, please see the Flood Hazard Mapping Updates Overview Fact Sheet at https://www.fema.gov/media-library/assets/documents/118418

This map complies with FEMA's standards for the use of digital flood maps if it is not void as described below. The basemap shown complies with FEMA's basemap accuracy standards. This map image is void if the one or more of the following map elements do not appear: basemap imagery, flood zone labels, legend, scale bar, map creation date, community identifiers, FIRM panel number, and FIRM effective date.

SCALE

Map Projection:
GCS, Geodetic Reference System 1980;
Vertical Datum: No elevation features on this FIRM
For information about the specific vertical datum for elevation features, datum conversions, or vertical monuments used to create this map, please see the Flood Insurance Study (FIS) Report for your community at https://msc.fema.gov

N

1 inch = 500 feet 1:6,000

0 250 500 1,000 1,500 2,000 Feet

0 50 100 200 300 400 Meters

FEMA
National Flood Insurance Program

NATIONAL FLOOD INSURANCE PROGRAM

FLOOD INSURANCE RATE MAP

MONTROSE COUNTY, COLORADO AND INCORPORATED AREAS

PANEL 767 OF 1400

Panel Contains:

COMMUNITY	NUMBER	PANEL
MONTROSE COUNTY	080124	0767
CITY OF MONTROSE	080125	0767

MAP NUMBER
08085C0767D
EFFECTIVE DATE
January 06, 2012

107°52'31.75"W 38°37'56.38"N

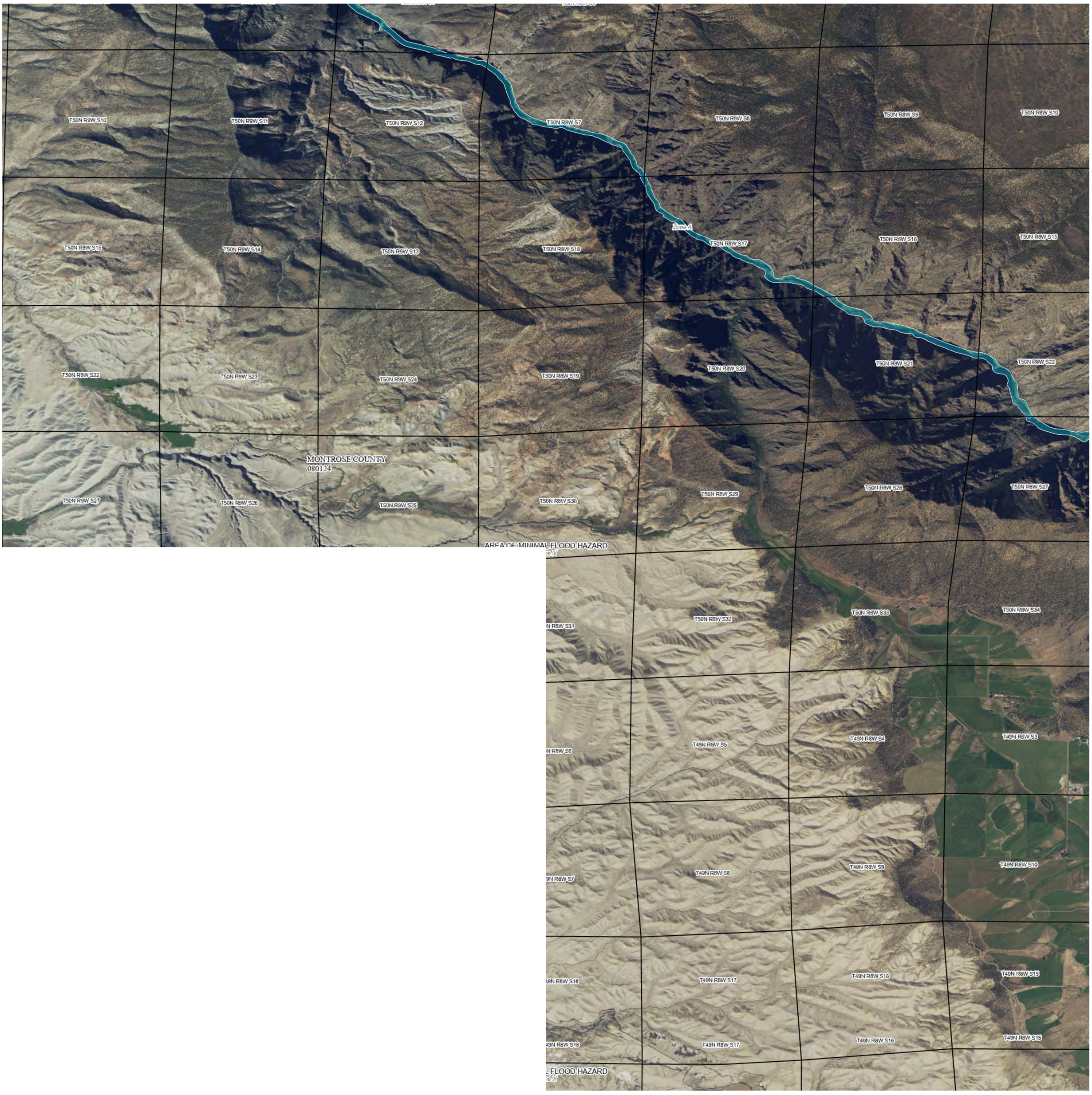

107°44'58.33"W 38°29'33.67"N

FLOOD HAZARD INFORMATION

SEE FIS REPORT FOR DETAILED LEGEND AND INDEX MAP
FOR DRAFT FIRM PANEL LAYOUT

SPECIAL FLOOD HAZARD AREAS
- Without Base Flood Elevation (BFE) *Zone A, V, A99*
- With BFE or Depth *Zone AE, AO, AH, VE, AR*
- Regulatory Floodway

OTHER AREAS OF FLOOD HAZARD
- 0.2% Annual Chance Flood Hazard, Areas of 1% annual chance flood with average depth less than one foot or with drainage areas of less than one square mile *Zone X*
- Future Conditions 1% Annual Chance Flood Hazard *Zone X*
- Area with Reduced Flood Risk due to Levee See Notes *Zone X*
- Area with Flood Risk due to Levee *Zone D*

OTHER AREAS
- NO SCREEN Area of Minimal Flood Hazard *Zone X*
- Effective LOMRs
- Area of Undetermined Flood Hazard *Zone D*

GENERAL STRUCTURES
- Channel, Culvert, or Storm Sewer
- Levee, Dike, or Floodwall

OTHER FEATURES
- B 20.2 Cross Sections with 1% Annual Chance
- 17.5 Water Surface Elevation
- 8 Coastal Transect
- Coastal Transect Baseline
- Profile Baseline
- Hydrographic Feature
- 513 Base Flood Elevation Line (BFE)
- Limit of Study
- Jurisdiction Boundary

NOTES TO USERS

For information and questions about this Flood Insurance Rate Map (FIRM), available products associated with this FIRM, including historic versions, the current map date for each FIRM panel, how to order products, or the National Flood Insurance Program (NFIP) in general, please call the FEMA Map Information eXchange at 1-877-FEMA-MAP (1-877-336-2627) or visit the FEMA Flood Map Service Center website at https://msc.fema.gov. Available products may include previously issued Letters of Map Change, a Flood Insurance Study Report, and/or digital versions of this map. Many of these products can be ordered or obtained directly from the website.

Communities annexing land on adjacent FIRM panels must obtain a current copy of the adjacent panel as well as the current FIRM Index. These may be ordered directly from the Flood Map Service Center at the number listed above.

For community and countywide map dates, refer to the Flood Insurance Study Report for this jurisdiction.

To determine if flood insurance is available in this community, contact your Insurance agent or call the National Flood Insurance Program at 1-800-638-6620.

Basemap information shown on this FIRM was provided in digital format by the United States Geological Survey (USGS). The basemap shown is the USGS National Map: Orthoimagery. Last refreshed October, 2020.

This map was exported from FEMA's National Flood Hazard Layer (NFHL) on **5/28/2021 1:14 PM** and does not reflect changes or amendments subsequent to this date and time. The NFHL and effective information may change or become superseded by new data over time. For additional information, please see the Flood Hazard Mapping Updates Overview Fact Sheet at https://www.fema.gov/media-library/assets/documents/118418

This map complies with FEMA's standards for the use of digital flood maps if it is not void as described below. The basemap shown complies with FEMA's basemap accuracy standards. This map image is void if the one or more of the following map elements do not appear: basemap imagery, flood zone labels, legend, scale bar, map creation date, community identifiers, FIRM panel number, and FIRM effective date.

SCALE

Map Projection:
GCS, Geodetic Reference System 1980;
Vertical Datum: No elevation features on this FIRM
For information about the specific vertical datum for elevation features, datum conversions, or vertical monuments used to create this map, please see the Flood Insurance Study (FIS) Report for your community at https://msc.fema.gov

N

1 inch = 2,000 feet 1:24,000

0 1,000 2,000 4,000 6,000 8,000 Feet

0 210 420 840 1,260 1,680 Meters

FEMA
National Flood Insurance Program

NATIONAL FLOOD INSURANCE PROGRAM
FLOOD INSURANCE RATE MAP

MONTROSE COUNTY, COLORADO AND INCORPORATED AREAS

PANEL 475 OF 1400

Panel Contains:

COMMUNITY	NUMBER	PANEL
MONTROSE COUNTY	080124	0475

MAP NUMBER
08085C0475D
EFFECTIVE DATE
January 06, 2012

107°37'31.75"W 38°24'29.82"N

107°29'58.33"W 38°16'7.11"N

FLOOD HAZARD INFORMATION

SEE FIS REPORT FOR DETAILED LEGEND AND INDEX MAP FOR DRAFT FIRM PANEL LAYOUT

SPECIAL FLOOD HAZARD AREAS
- Without Base Flood Elevation (BFE) *Zone A, V, A99*
- With BFE or Depth *Zone AE, AO, AH, VE, AR*
- Regulatory Floodway

OTHER AREAS OF FLOOD HAZARD
- 0.2% Annual Chance Flood Hazard, Areas of 1% annual chance flood with average depth less than one foot or with drainage areas of less than one square mile *Zone X*
- Future Conditions 1% Annual Chance Flood Hazard *Zone X*
- Area with Reduced Flood Risk due to Levee See Notes *Zone X*
- Area with Flood Risk due to Levee *Zone D*

OTHER AREAS
- NO SCREEN Area of Minimal Flood Hazard *Zone X*
- Effective LOMRs
- Area of Undetermined Flood Hazard *Zone D*

GENERAL STRUCTURES
- Channel, Culvert, or Storm Sewer
- Levee, Dike, or Floodwall

OTHER FEATURES
- B 20.2 Cross Sections with 1% Annual Chance
- 17.5 Water Surface Elevation
- 8 Coastal Transect
- Coastal Transect Baseline
- Profile Baseline
- Hydrographic Feature
- 513 Base Flood Elevation Line (BFE)
- Limit of Study
- Jurisdiction Boundary

NOTES TO USERS

For information and questions about this Flood Insurance Rate Map (FIRM), available products associated with this FIRM, including historic versions, the current map date for each FIRM panel, how to order products, or the National Flood Insurance Program (NFIP) in general, please call the FEMA Map Information eXchange at 1-877-FEMA-MAP (1-877-336-2627) or visit the FEMA Flood Map Service Center website at https://msc.fema.gov. Available products may include previously issued Letters of Map Change, a Flood Insurance Study Report, and/or digital versions of this map. Many of these products can be ordered or obtained directly from the website.

Communities annexing land on adjacent FIRM panels must obtain a current copy of the adjacent panel as well as the current FIRM Index. These may be ordered directly from the Flood Map Service Center at the number listed above.

For community and countywide map dates, refer to the Flood Insurance Study Report for this jurisdiction.

To determine if flood insurance is available in this community, contact your Insurance agent or call the National Flood Insurance Program at 1-800-638-6620.

Basemap information shown on this FIRM was provided in digital format by the United States Geological Survey (USGS). The basemap shown is the USGS National Map: Orthoimagery. Last refreshed October, 2020.

This map was exported from FEMA's National Flood Hazard Layer (NFHL) on **5/28/2021 1:24 PM** and does not reflect changes or amendments subsequent to this date and time. The NFHL and effective information may change or become superseded by new data over time. For additional information, please see the Flood Hazard Mapping Updates Overview Fact Sheet at https://www.fema.gov/media-library/assets/documents/118418

This map complies with FEMA's standards for the use of digital flood maps if it is not void as described below. The basemap shown complies with FEMA's basemap accuracy standards. This map image is void if the one or more of the following map elements do not appear: basemap imagery, flood zone labels, legend, scale bar, map creation date, community identifiers, FIRM panel number, and FIRM effective date.

SCALE

Map Projection:
GCS, Geodetic Reference System 1980;
Vertical Datum: No elevation features on this FIRM
For information about the specific vertical datum for elevation features, datum conversions, or vertical monuments used to create this map, please see the Flood Insurance Study (FIS) Report for your community at https://msc.fema.gov

N

1 inch = 2,000 feet 1:24,000

0 1,000 2,000 4,000 6,000 8,000 Feet

0 210 420 840 1,260 1,680 Meters

FEMA
National Flood Insurance Program

NATIONAL FLOOD INSURANCE PROGRAM

FLOOD INSURANCE RATE MAP

MONTROSE COUNTY, COLORADO AND INCORPORATED AREAS

PANEL **1175** OF **1400**

Panel Contains:

COMMUNITY	NUMBER	PANEL
GUNNISON COUNTY	080078	1175
MONTROSE COUNTY	080124	1175

MAP NUMBER
08085C1175D
EFFECTIVE DATE
January 06, 2012

107°37'31.74"W 38°22'56.38"N

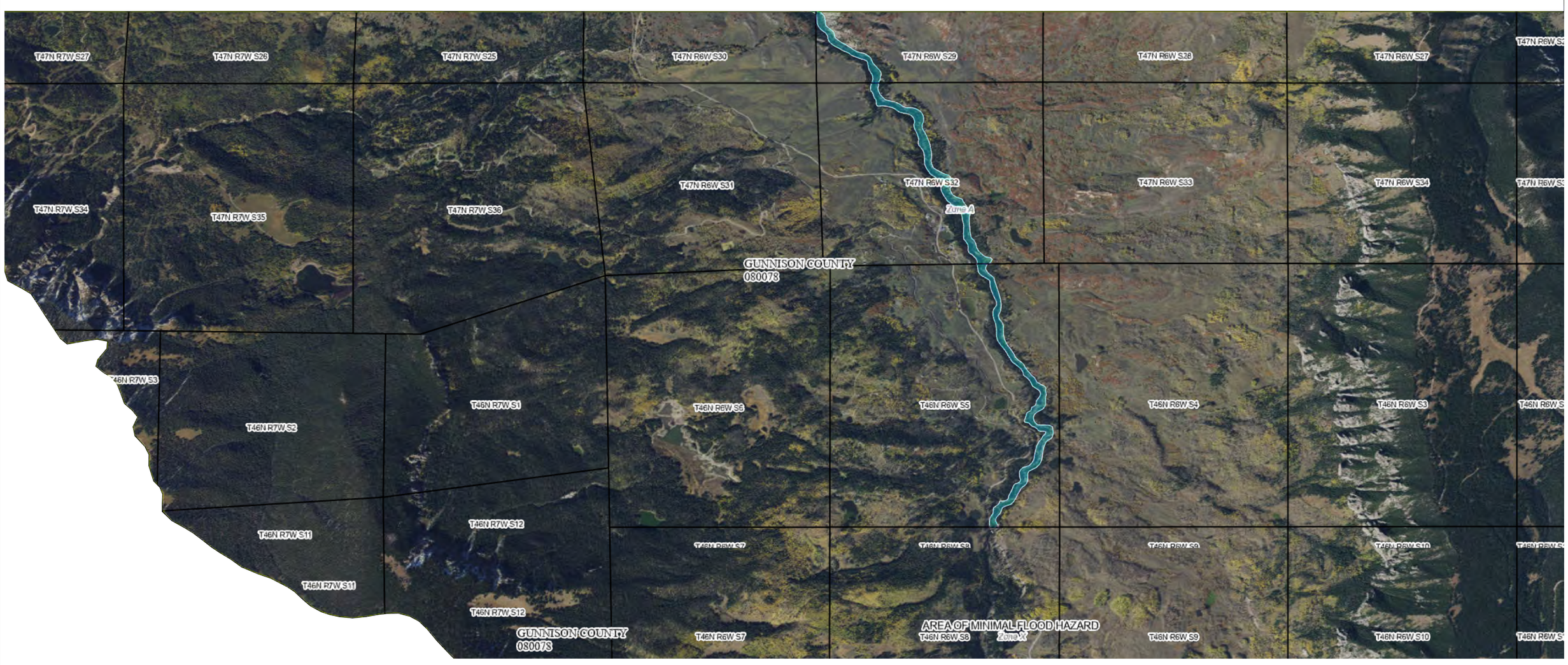

107°29'58.32"W 38°14'33.67"N

FLOOD HAZARD INFORMATION

SEE FIS REPORT FOR DETAILED LEGEND AND INDEX MAP FOR DRAFT FIRM PANEL LAYOUT

SPECIAL FLOOD HAZARD AREAS
- Without Base Flood Elevation (BFE) *Zone A, V, A99*
- With BFE or Depth *Zone AE, AO, AH, VE, AR*
- Regulatory Floodway

OTHER AREAS OF FLOOD HAZARD
- 0.2% Annual Chance Flood Hazard, Areas of 1% annual chance flood with average depth less than one foot or with drainage areas of less than one square mile *Zone X*
- Future Conditions 1% Annual Chance Flood Hazard *Zone X*
- Area with Reduced Flood Risk due to Levee See Notes *Zone X*
- Area with Flood Risk due to Levee *Zone D*

OTHER AREAS
- NO SCREEN Area of Minimal Flood Hazard *Zone X*
- Effective LOMRs
- Area of Undetermined Flood Hazard *Zone D*

GENERAL STRUCTURES
- Channel, Culvert, or Storm Sewer
- Levee, Dike, or Floodwall

OTHER FEATURES
- B 20.2 Cross Sections with 1% Annual Chance
- 17.5 Water Surface Elevation
- 8 Coastal Transect
- Coastal Transect Baseline
- Profile Baseline
- Hydrographic Feature
- 513 Base Flood Elevation Line (BFE)
- Limit of Study
- Jurisdiction Boundary

NOTES TO USERS

For information and questions about this Flood Insurance Rate Map (FIRM), available products associated with this FIRM, including historic versions, the current map date for each FIRM panel, how to order products, or the National Flood Insurance Program (NFIP) in general, please call the FEMA Map Information eXchange at 1-877-FEMA-MAP (1-877-336-2627) or visit the FEMA Flood Map Service Center website at https://msc.fema.gov. Available products may include previously issued Letters of Map Change, a Flood Insurance Study Report, and/or digital versions of this map. Many of these products can be ordered or obtained directly from the website.

Communities annexing land on adjacent FIRM panels must obtain a current copy of the adjacent panel as well as the current FIRM Index. These may be ordered directly from the Flood Map Service Center at the number listed above.

For community and countywide map dates, refer to the Flood Insurance Study Report for this jurisdiction.

To determine if flood insurance is available in this community, contact your Insurance agent or call the National Flood Insurance Program at 1-800-638-6620.

Basemap information shown on this FIRM was provided in digital format by the United States Geological Survey (USGS). The basemap shown is the USGS National Map: Orthoimagery. Last refreshed October, 2020.

This map was exported from FEMA's National Flood Hazard Layer (NFHL) on **5/28/2021 1:28 PM** and does not reflect changes or amendments subsequent to this date and time. The NFHL and effective information may change or become superseded by new data over time. For additional information, please see the Flood Hazard Mapping Updates Overview Fact Sheet at https://www.fema.gov/media-library/assets/documents/118418

This map complies with FEMA's standards for the use of digital flood maps if it is not void as described below. The basemap shown complies with FEMA's basemap accuracy standards. This map image is void if the one or more of the following map elements do not appear: basemap imagery, flood zone labels, legend, scale bar, map creation date, community identifiers, FIRM panel number, and FIRM effective date.

SCALE

Map Projection:
GCS, Geodetic Reference System 1980;
Vertical Datum: No elevation features on this FIRM
For information about the specific vertical datum for elevation features, datum conversions, or vertical monuments used to create this map, please see the Flood Insurance Study (FIS) Report for your community at https://msc.fema.gov

N

1 inch = 2,000 feet 1:24,000

0 1,000 2,000 4,000 6,000 8,000 Feet

0 210 420 840 1,260 1,680 Meters

FEMA
National Flood Insurance Program

NATIONAL FLOOD INSURANCE PROGRAM

FLOOD INSURANCE RATE MAP

GUNNISON COUNTY, COLORADO AND INCORPORATED AREAS

PANEL **1750** OF **1975**

Panel Contains:

COMMUNITY	NUMBER	PANEL
GUNNISON COUNTY	080078	1750
MONTROSE COUNTY	080124	1750

MAP NUMBER
08051C1750D
EFFECTIVE DATE
May 16, 2013

107°45'1.75"W 38°30'26.38"N

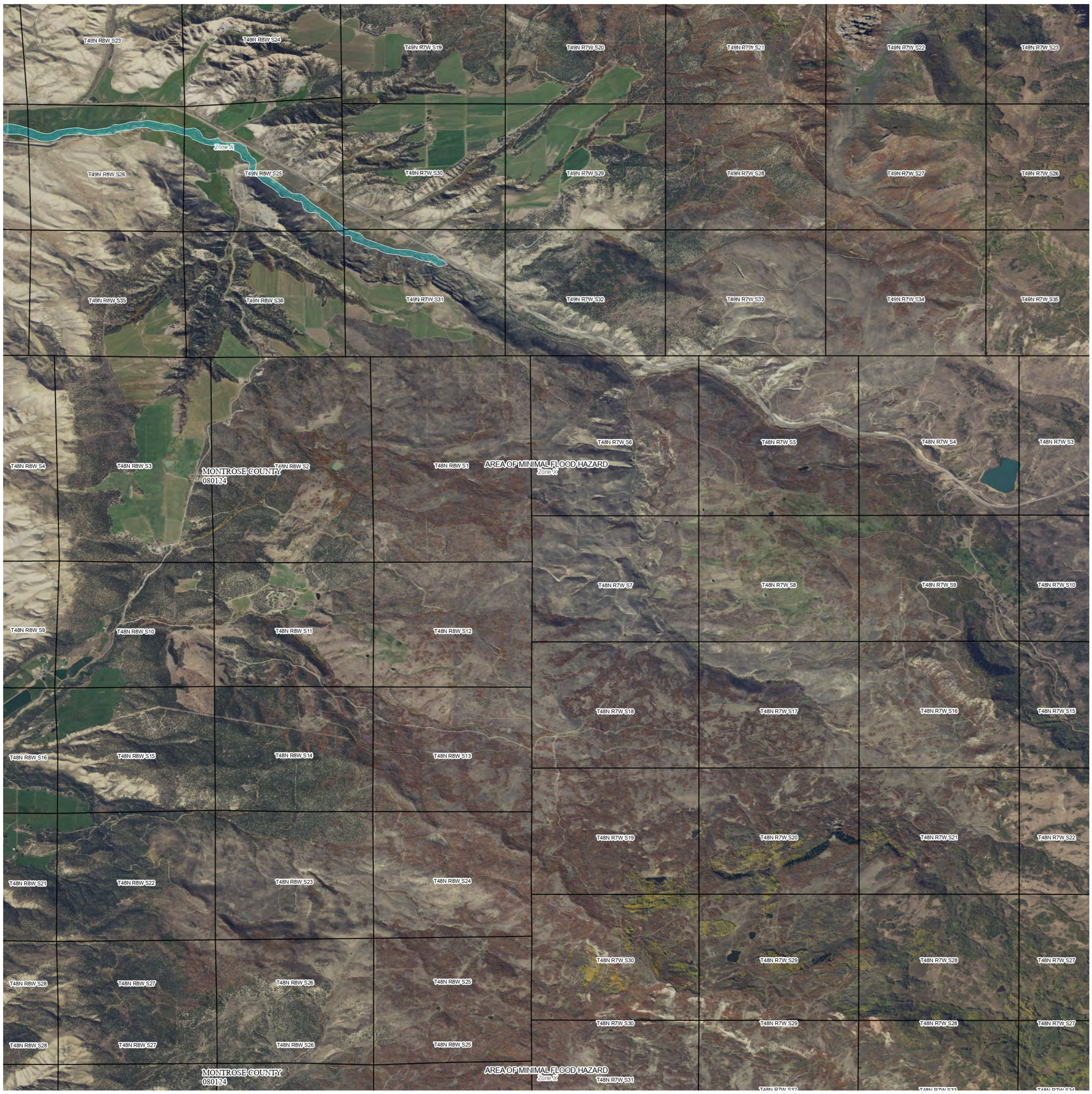

107°37'28.33"W 38°22'3.67"N

FLOOD HAZARD INFORMATION

SEE FIS REPORT FOR DETAILED LEGEND AND INDEX MAP FOR DRAFT FIRM PANEL LAYOUT

SPECIAL FLOOD HAZARD AREAS
- Without Base Flood Elevation (BFE) *Zone A, V, A99*
- With BFE or Depth *Zone AE, AO, AH, VE, AR*
- Regulatory Floodway

OTHER AREAS OF FLOOD HAZARD
- 0.2% Annual Chance Flood Hazard, Areas of 1% annual chance flood with average depth less than one foot or with drainage areas of less than one square mile *Zone X*
- Future Conditions 1% Annual Chance Flood Hazard *Zone X*
- Area with Reduced Flood Risk due to Levee See Notes *Zone X*
- Area with Flood Risk due to Levee *Zone D*

OTHER AREAS
- NO SCREEN Area of Minimal Flood Hazard *Zone X*
- Effective LOMRs
- Area of Undetermined Flood Hazard *Zone D*

GENERAL STRUCTURES
- Channel, Culvert, or Storm Sewer
- Levee, Dike, or Floodwall

OTHER FEATURES
- B 20.2 Cross Sections with 1% Annual Chance
- 17.5 Water Surface Elevation
- 8 Coastal Transect
- Coastal Transect Baseline
- Profile Baseline
- Hydrographic Feature
- 513 Base Flood Elevation Line (BFE)
- Limit of Study
- Jurisdiction Boundary

NOTES TO USERS

For information and questions about this Flood Insurance Rate Map (FIRM), available products associated with this FIRM, including historic versions, the current map date for each FIRM panel, how to order products, or the National Flood Insurance Program (NFIP) in general, please call the FEMA Map Information eXchange at 1-877-FEMA-MAP (1-877-336-2627) or visit the FEMA Flood Map Service Center website at https://msc.fema.gov. Available products may include previously issued Letters of Map Change, a Flood Insurance Study Report, and/or digital versions of this map. Many of these products can be ordered or obtained directly from the website.

Communities annexing land on adjacent FIRM panels must obtain a current copy of the adjacent panel as well as the current FIRM Index. These may be ordered directly from the Flood Map Service Center at the number listed above.

For community and countywide map dates, refer to the Flood Insurance Study Report for this jurisdiction.

To determine if flood insurance is available in this community, contact your Insurance agent or call the National Flood Insurance Program at 1-800-638-6620.

Basemap information shown on this FIRM was provided in digital format by the United States Geological Survey (USGS). The basemap shown is the USGS National Map: Orthoimagery. Last refreshed October, 2020.

This map was exported from FEMA's National Flood Hazard Layer (NFHL) on **5/28/2021 1:19 PM** and does not reflect changes or amendments subsequent to this date and time. The NFHL and effective information may change or become superseded by new data over time. For additional information, please see the Flood Hazard Mapping Updates Overview Fact Sheet at https://www.fema.gov/media-library/assets/documents/118418

This map complies with FEMA's standards for the use of digital flood maps if it is not void as described below. The basemap shown complies with FEMA's basemap accuracy standards. This map image is void if the one or more of the following map elements do not appear: basemap imagery, flood zone labels, legend, scale bar, map creation date, community identifiers, FIRM panel number, and FIRM effective date.

SCALE

Map Projection:
GCS, Geodetic Reference System 1980;
Vertical Datum: No elevation features on this FIRM
For information about the specific vertical datum for elevation features, datum conversions, or vertical monuments used to create this map, please see the Flood Insurance Study (FIS) Report for your community at https://msc.fema.gov

N

1 inch = 2,000 feet 1:24,000

0 1,000 2,000 4,000 6,000 8,000 Feet

0 210 420 840 1,260 1,680 Meters

FEMA
National Flood Insurance Program

NATIONAL FLOOD INSURANCE PROGRAM

FLOOD INSURANCE RATE MAP

MONTROSE COUNTY, COLORADO AND INCORPORATED AREAS

PANEL 825 OF 1400

Panel Contains:

COMMUNITY	NUMBER	PANEL
MONTROSE COUNTY	080124	0825

MAP NUMBER
08085C0825D
EFFECTIVE DATE
January 06, 2012

107°45'1.75"W 38°37'56.38"N

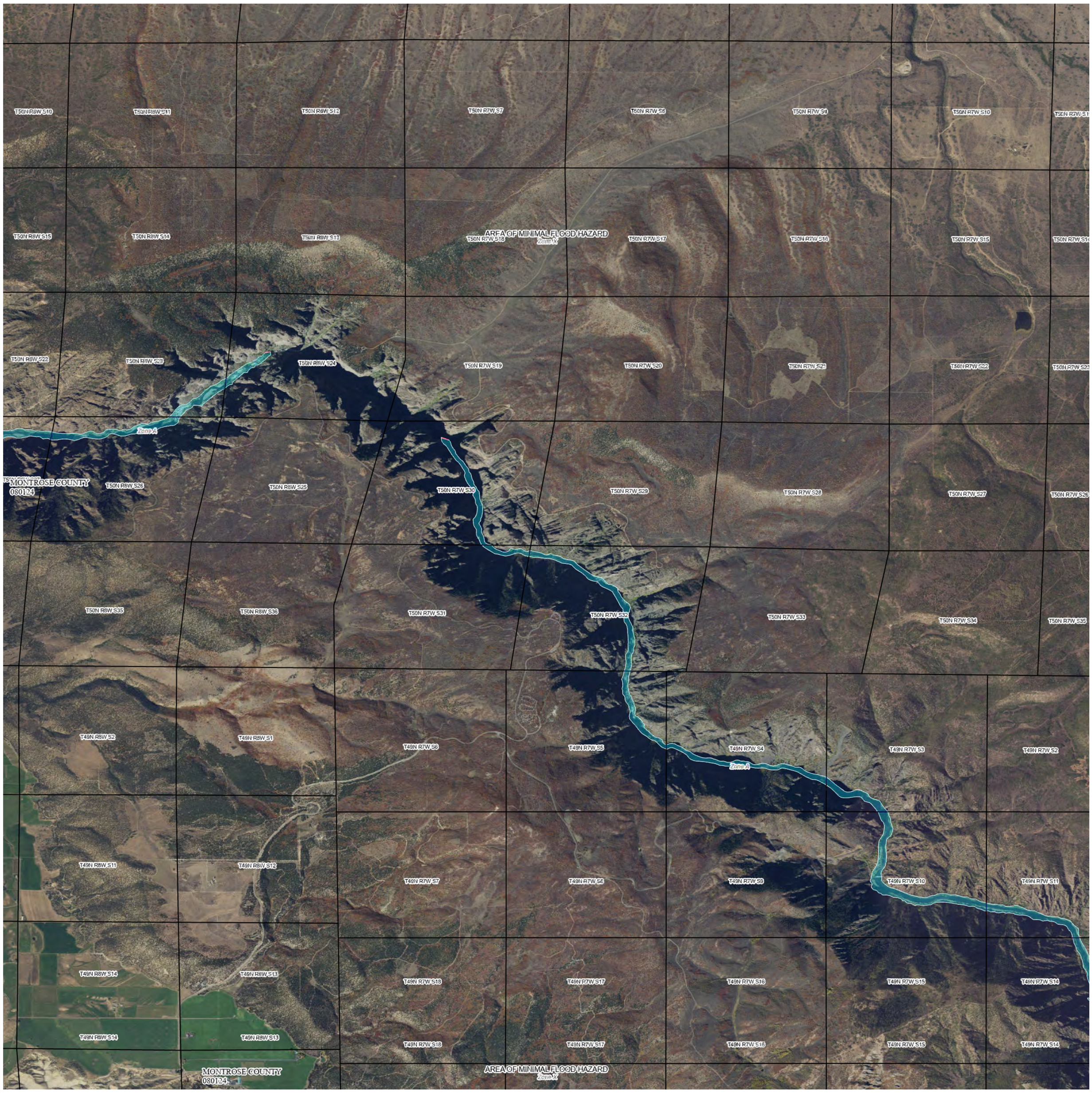

107°37'28.33"W 38°29'33.67"N

FLOOD HAZARD INFORMATION

SEE FIS REPORT FOR DETAILED LEGEND AND INDEX MAP FOR DRAFT FIRM PANEL LAYOUT

SPECIAL FLOOD HAZARD AREAS
- Without Base Flood Elevation (BFE) *Zone A, V, A99*
- With BFE or Depth *Zone AE, AO, AH, VE, AR*
- Regulatory Floodway

OTHER AREAS OF FLOOD HAZARD
- 0.2% Annual Chance Flood Hazard, Areas of 1% annual chance flood with average depth less than one foot or with drainage areas of less than one square mile *Zone X*
- Future Conditions 1% Annual Chance Flood Hazard *Zone X*
- Area with Reduced Flood Risk due to Levee See Notes *Zone X*
- Area with Flood Risk due to Levee *Zone D*

OTHER AREAS
- NO SCREEN Area of Minimal Flood Hazard *Zone X*
- Effective LOMRs
- Area of Undetermined Flood Hazard *Zone D*

GENERAL STRUCTURES
- Channel, Culvert, or Storm Sewer
- Levee, Dike, or Floodwall

OTHER FEATURES
- B 20.2 Cross Sections with 1% Annual Chance
- 17.5 Water Surface Elevation
- 8 Coastal Transect
- Coastal Transect Baseline
- Profile Baseline
- Hydrographic Feature
- 513 Base Flood Elevation Line (BFE)
- Limit of Study
- Jurisdiction Boundary

NOTES TO USERS

For information and questions about this Flood Insurance Rate Map (FIRM), available products associated with this FIRM, including historic versions, the current map date for each FIRM panel, how to order products, or the National Flood Insurance Program (NFIP) in general, please call the FEMA Map Information eXchange at 1-877-FEMA-MAP (1-877-336-2627) or visit the FEMA Flood Map Service Center website at https://msc.fema.gov. Available products may include previously issued Letters of Map Change, a Flood Insurance Study Report, and/or digital versions of this map. Many of these products can be ordered or obtained directly from the website.

Communities annexing land on adjacent FIRM panels must obtain a current copy of the adjacent panel as well as the current FIRM Index. These may be ordered directly from the Flood Map Service Center at the number listed above.

For community and countywide map dates, refer to the Flood Insurance Study Report for this jurisdiction.

To determine if flood insurance is available in this community, contact your Insurance agent or call the National Flood Insurance Program at 1-800-638-6620.

Basemap information shown on this FIRM was provided in digital format by the United States Geological Survey (USGS). The basemap shown is the USGS National Map: Orthoimagery. Last refreshed October, 2020.

This map was exported from FEMA's National Flood Hazard Layer (NFHL) on 5/28/2021 12:48 PM and does not reflect changes or amendments subsequent to this date and time. The NFHL and effective information may change or become superseded by new data over time. For additional information, please see the Flood Hazard Mapping Updates Overview Fact Sheet at https://www.fema.gov/media-library/assets/documents/118418

This map complies with FEMA's standards for the use of digital flood maps if it is not void as described below. The basemap shown complies with FEMA's basemap accuracy standards. This map image is void if the one or more of the following map elements do not appear: basemap imagery, flood zone labels, legend, scale bar, map creation date, community identifiers, FIRM panel number, and FIRM effective date.

SCALE

Map Projection:
GCS, Geodetic Reference System 1980;
Vertical Datum: No elevation features on this FIRM
For information about the specific vertical datum for elevation features, datum conversions, or vertical monuments used to create this map, please see the Flood Insurance Study (FIS) Report for your community at https://msc.fema.gov

N

1 inch = 2,000 feet 1:24,000

0 1,000 2,000 4,000 6,000 8,000 Feet

0 210 420 840 1,260 1,680 Meters

FEMA
National Flood Insurance Program

NATIONAL FLOOD INSURANCE PROGRAM

FLOOD INSURANCE RATE MAP

MONTROSE COUNTY, COLORADO AND INCORPORATED AREAS

PANEL 500 OF 1400

Panel Contains:

COMMUNITY	NUMBER	PANEL
MONTROSE COUNTY	080124	0500

MAP NUMBER
08085C0500D
EFFECTIVE DATE
January 06, 2012

107°54'22.97"W 38°28'14.11"N

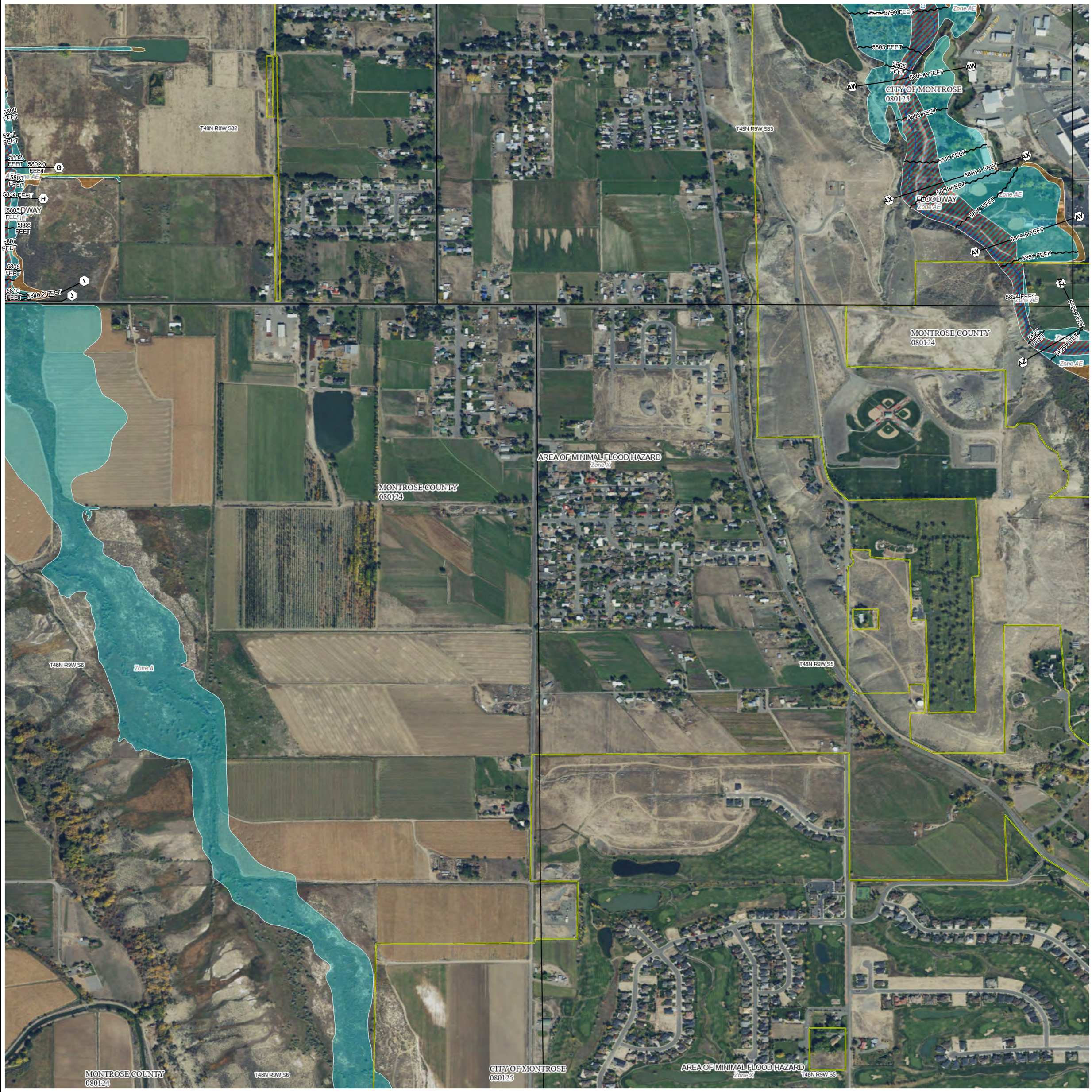

107°52'29.61"W 38°26'8.43"N

FLOOD HAZARD INFORMATION

SEE FIS REPORT FOR DETAILED LEGEND AND INDEX MAP FOR DRAFT FIRM PANEL LAYOUT

SPECIAL FLOOD HAZARD AREAS

- Without Base Flood Elevation (BFE) *Zone A, V, A99*
- With BFE or Depth *Zone AE, AO, AH, VE, AR*
- Regulatory Floodway

OTHER AREAS OF FLOOD HAZARD

- 0.2% Annual Chance Flood Hazard, Areas of 1% annual chance flood with average depth less than one foot or with drainage areas of less than one square mile *Zone X*
- Future Conditions 1% Annual Chance Flood Hazard *Zone X*
- Area with Reduced Flood Risk due to Levee See Notes *Zone X*
- Area with Flood Risk due to Levee *Zone D*

OTHER AREAS

- NO SCREEN Area of Minimal Flood Hazard *Zone X*
- Effective LOMRs
- Area of Undetermined Flood Hazard *Zone D*

GENERAL STRUCTURES

- Channel, Culvert, or Storm Sewer
- Levee, Dike, or Floodwall

OTHER FEATURES

- 20.2 Cross Sections with 1% Annual Chance
- 17.5 Water Surface Elevation
- 8 Coastal Transect
- Coastal Transect Baseline
- Profile Baseline
- Hydrographic Feature
- 513 Base Flood Elevation Line (BFE)
- Limit of Study
- Jurisdiction Boundary

NOTES TO USERS

For information and questions about this Flood Insurance Rate Map (FIRM), available products associated with this FIRM, including historic versions, the current map date for each FIRM panel, how to order products, or the National Flood Insurance Program (NFIP) in general, please call the FEMA Map Information eXchange at 1-877-FEMA-MAP (1-877-336-2627) or visit the FEMA Flood Map Service Center website at https://msc.fema.gov. Available products may include previously issued Letters of Map Change, a Flood Insurance Study Report, and/or digital versions of this map. Many of these products can be ordered or obtained directly from the website.

Communities annexing land on adjacent FIRM panels must obtain a current copy of the adjacent panel as well as the current FIRM Index. These may be ordered directly from the Flood Map Service Center at the number listed above.

For community and countywide map dates, refer to the Flood Insurance Study Report for this jurisdiction.

To determine if flood insurance is available in this community, contact your Insurance agent or call the National Flood Insurance Program at 1-800-638-6620.

Basemap information shown on this FIRM was provided in digital format by the United States Geological Survey (USGS). The basemap shown is the USGS National Map: Orthoimagery. Last refreshed October, 2020.

This map was exported from FEMA's National Flood Hazard Layer (NFHL) on **5/28/2021 12:37 PM** and does not reflect changes or amendments subsequent to this date and time. The NFHL and effective information may change or become superseded by new data over time. For additional information, please see the Flood Hazard Mapping Updates Overview Fact Sheet at https://www.fema.gov/media-library/assets/documents/118418

This map complies with FEMA's standards for the use of digital flood maps if it is not void as described below. The basemap shown complies with FEMA's basemap accuracy standards. This map image is void if the one or more of the following map elements do not appear: basemap imagery, flood zone labels, legend, scale bar, map creation date, community identifiers, FIRM panel number, and FIRM effective date.

SCALE

Map Projection:
GCS, Geodetic Reference System 1980;
Vertical Datum: NAVD88
For information about the specific vertical datum for elevation features, datum conversions, or vertical monuments used to create this map, please see the Flood Insurance Study (FIS) Report for your community at https://msc.fema.gov

N

1 inch = 500 feet 1:6,000

0 250 500 1,000 1,500 2,000 Feet

0 50 100 200 300 400 Meters

FEMA
National Flood Insurance Program

NATIONAL FLOOD INSURANCE PROGRAM

FLOOD INSURANCE RATE MAP

MONTROSE COUNTY, COLORADO AND INCORPORATED AREAS

PANEL 759 OF 1400

Panel Contains:

COMMUNITY	NUMBER	PANEL
CITY OF MONTROSE	080125	0759
MONTROSE COUNTY	080124	0759

MAP NUMBER
08085C0759D
EFFECTIVE DATE
January 06, 2012

Map 9 – Montrose County Zoning Map

Montrose County Zoning

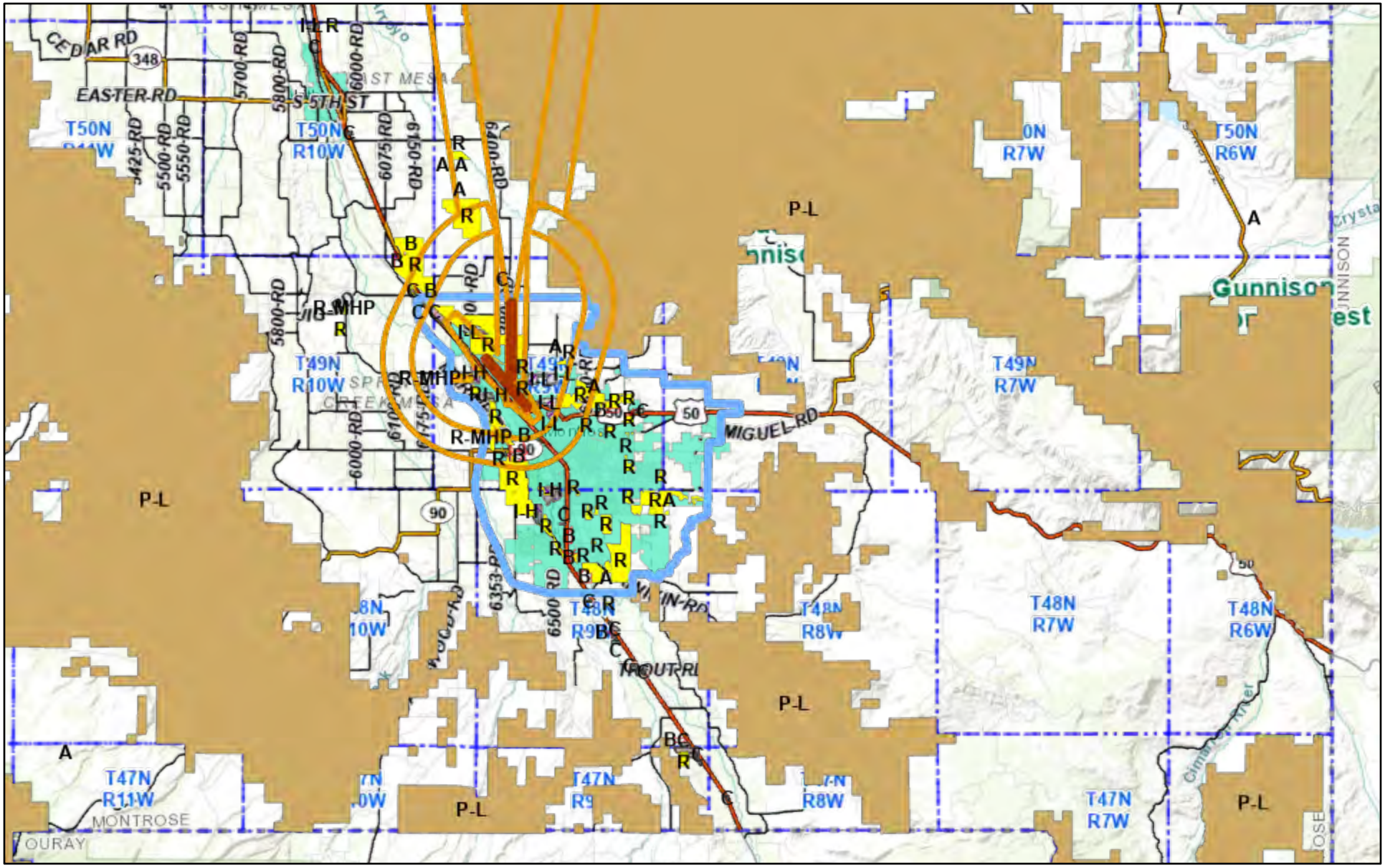

10/11/2022, 3:38:11 PM

Highways — County Road — State Hwy — Curecanti NRA — CPW

DOT — City Highways — Townships — Land Ownership — NPS

CDOT — US Hwy — Montrose County Line — BLM — USFS

1:288,895

0 2 4 8 mi

0 3 6 12 km

Bureau of Land Management, Esri, HERE, Garmin, USGS, NGA, EPA, USDA, NPS, Montrose County

Montrose County

Bureau of Land Management, Esri, HERE, Garmin, USGS, NGA, EPA, USDA, NPS | Eagle View & Montrose County | EagleView & Montrose County | Montrose County | Montrose County GIS and other county departments |

30% Plans

BOSTWICK PARK WATER CONSERVANCY DISTRICT

WELLS BASIN PIPING

30% PLANS

September

2023

PRELIMINARY PLANS NOT FOR CONSTRUCTION

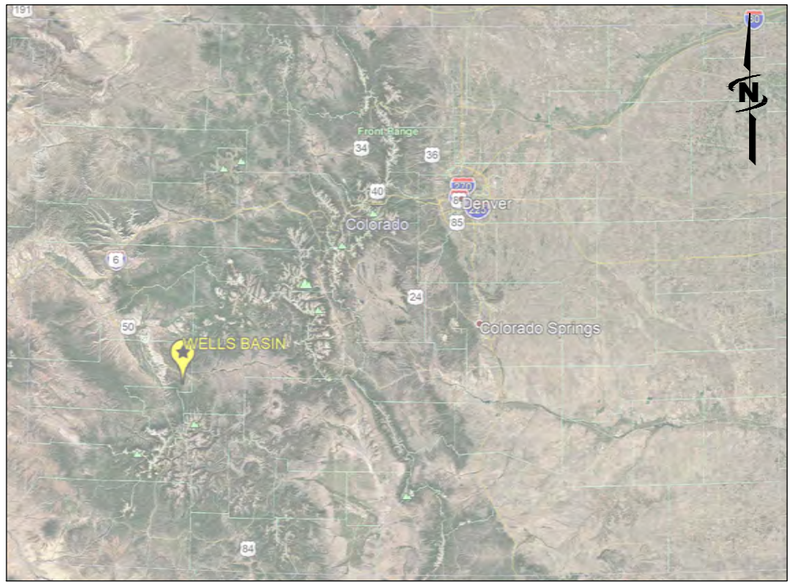

AREA MAP

VICINITY MAP

INDEX OF SHEETS	
GENERAL	
G–001	COVER SHEET
CIVIL	
C–101	SITE PLAN
C–201	PLAN & PROFILE
C–202	PLAN & PROFILE
C–203	PLAN & PROFILE
C–204	PLAN & PROFILE
C–501	DETAILS
C–502	DETAILS

PROJECT NO. 81-20-017

J-U-B ENGINEERS, INC.

305 Main Street, Palisade, CO 81526
p 970 208 8508 w www.jub.com

THE LANGDON GROUP

GATEWAY MAPPING INC.

J-U-B FAMILY OF COMPANIES

REUSE OF DOCUMENTS

J-U-B grants to CLIENT a nonexclusive, non-transferable license to use the Drawings, Specifications and/or Contract Documents (Documents) as follows:

CLIENT may make and retain copies of the Documents for reference, but J-U-B shall retain all common law, statutory and other reserved rights, including the copyright thereto, and the same shall not be reused on this Project or any other Project without J-U-B's prior written consent. Distribution of Documents to meet regulatory or permitting requirements, or for similar purposes, in connection with the Project, including but not limited to distribution to contractors or subcontractors for the performance of their work, is not to be construed as publication adversely affecting the reserved rights of J-U-B. The Documents are not intended for use in creating dtm for grading or earthwork, survey staking layout (unless specifically identified as such in the documents), or property boundary layouts.

Any reuse without written consent by J-U-B, or without verification or adoption by J-U-B for the specific purpose intended by the reuse, will be at CLIENT's sole risk and without liability or legal exposure to J-U-B. The CLIENT shall release, defend, indemnify, and hold J-U-B harmless from any claims, damages, actions or causes of action, losses, and expenses, including reasonable attorneys' and expert fees, arising out of or resulting from such reuse.

If the Documents are provided in electronic format, the electronic documents are subject to the provisions of J-U-B's "electronic document/data limited license" found at edocs.jub.com

LAST UPDATED: 9/19/2023

SHEET NUMBER:

G-001

Plot Date:9/19/2023 \\JUB\CENTRAL\CLIENTS\CO\BOSTWICKPARK\PROJECTS\81-20-017_PL-566PLANEA\DESIGN\WELLSBASIN\CAD\SHEET\81-20-017_WELLSBASIN_G00X.DWG

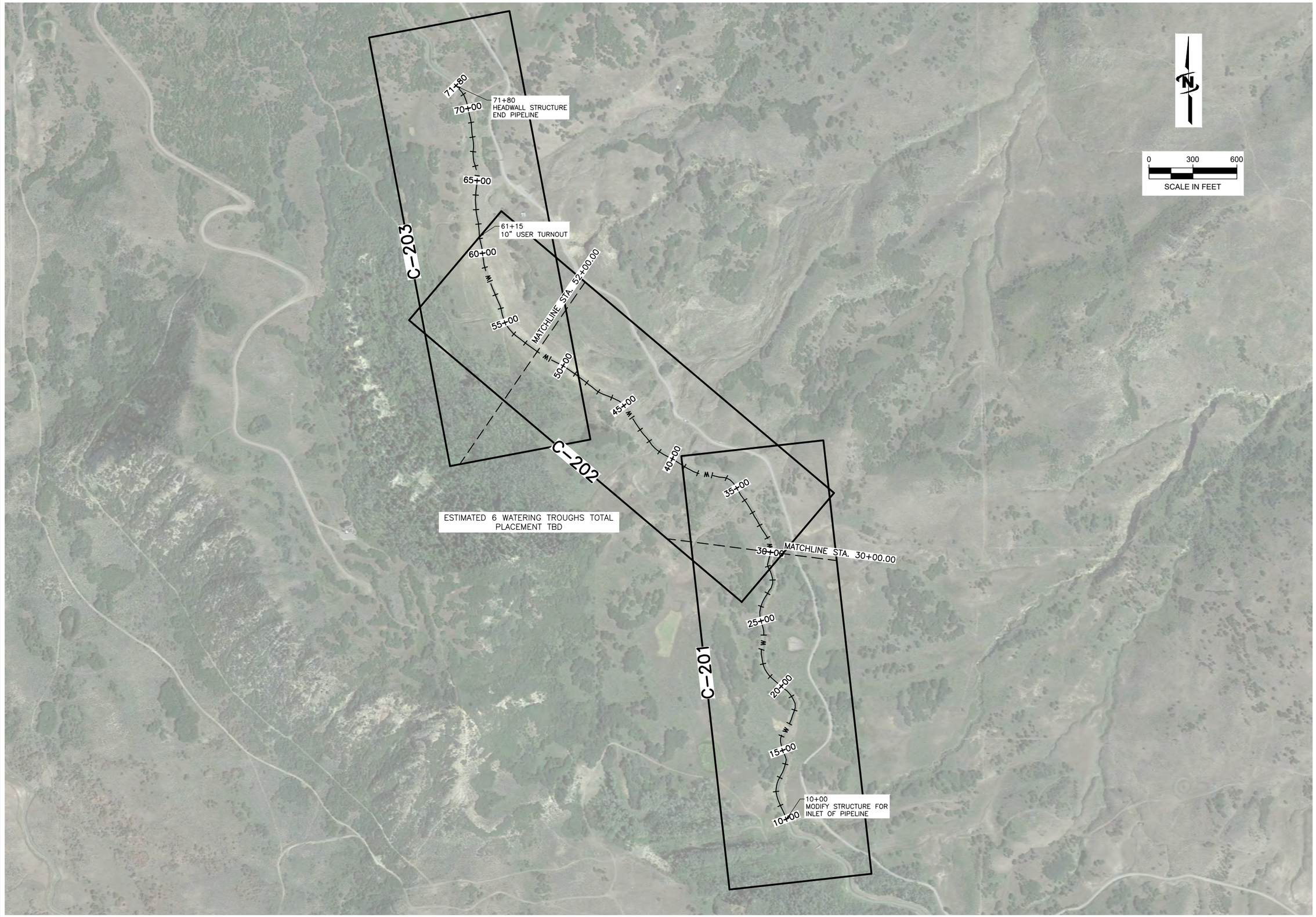

Plot Date:9/18/2023 1:21 PM Plotted By: Corey Bluboum
Date Created:10/21/2021 \\JUB\CENTRAL\CLIENTS\CO\BOSTWICKPARK\PROJECTS\81-20-017_PL-566\PLANE\DESIGN\COALHILL\CAD\SHEETS\81_20_017_COALHILL-63_C10X.DWG

J-U-B ENGINEERS, INC.

J-U-B ENGINEERS, INC.
305 S. Main Street
Unit 6
Palisade, CO 81526
Phone: 970.208.8508
www.jub.com

PRELIMINARY PLANS

NOT FOR CONSTRUCTION

REUSE OF DRAWINGS
J-U-B SHALL RETAIN ALL COMMON LAW, STATUTORY, COPYRIGHT AND OTHER RESERVED RIGHTS OF THESE DRAWINGS, AND THE SAME SHALL NOT BE REUSED WITHOUT J-U-B'S PRIOR WRITTEN CONSENT. ANY REUSE WITHOUT WRITTEN CONSENT BY J-U-B WILL BE AT CLIENTS SOLE RISK AND WITHOUT LIABILITY OR LEGAL EXPOSURE TO J-U-B.

REVISION

NO.	DESCRIPTION	BY	APR.	DATE

BOSTWICK PARK WATER CONSERVANCY DISTRICT
COAL HILL 30% PLANS

ALIGNMENT

FILE : 81_20_017_COALHILL-63_C10X
JUB PROJ. # : 81-20-017
DRAWN BY: ----
DESIGN BY: ----
CHECKED BY: ----

ONE INCH
AT FULL SIZE, IF NOT ONE INCH, SCALE ACCORDINGLY

LAST UPDATED: 10/21/2021

SHEET NUMBER:
C-101

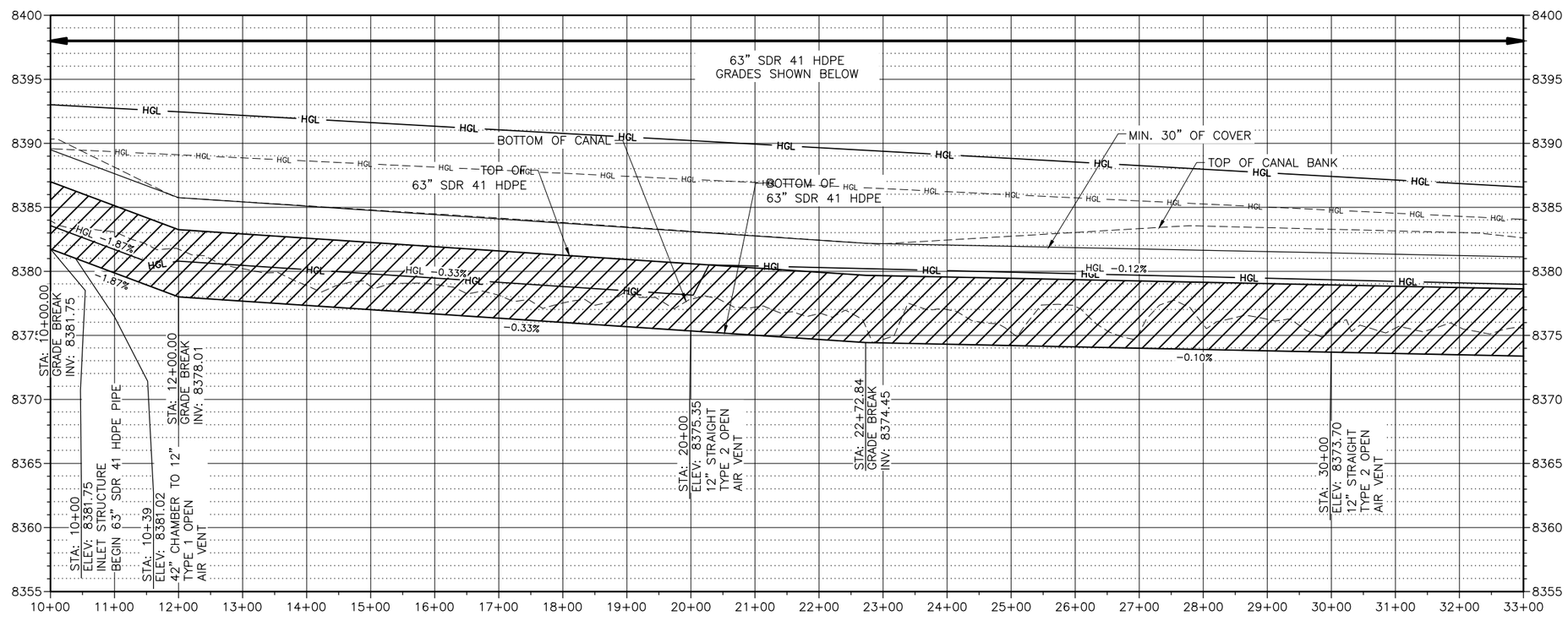

J-U-B ENGINEERS, INC.

J-U-B ENGINEERS, INC.
305 S. Main Street
Unit 6
Palisade, CO 81526
Phone: 970.208.8508
www.jub.com

PRELIMINARY PLANS

NOT FOR CONSTRUCTION

REUSE OF DRAWINGS

J-U-B SHALL RETAIN ALL COMMON LAW, STATUTORY, COPYRIGHT AND OTHER RESERVED RIGHTS OF THESE DRAWINGS, AND THE SAME SHALL NOT BE REUSED WITHOUT J-U-B'S PRIOR WRITTEN CONSENT. ANY REUSE WITHOUT WRITTEN CONSENT BY J-U-B WILL BE AT CLIENTS SOLE RISK AND WITHOUT LIABILITY OR LEGAL EXPOSURE TO J-U-B.

NO.	REVISION	BY	APR.	DATE

DESCRIPTION

BOSTWICK PARK WATER CONSERVANCY DISTRICT
WELLS BASIN PIPING 30% PLANS

PLAN & PROFILE

FILE : 81-20-017_WELLSBASIN_C20X
JUB PROJ. # : 81-20-017
DRAWN BY: DTF
DESIGN BY: NJE
CHECKED BY: LDG

ONE INCH
AT FULL SIZE, IF NOT ONE INCH, SCALE ACCORDINGLY

LAST UPDATED: 9/19/2023

SHEET NUMBER:

C-201

Plot Date:9/19/2023 9:09 AM Plotted By: Corey Blubaum
Date Created:9/19/2023 \\JUBCENTRAL\CLIENTS\CO\BOSTWICKPARK\PROJECTS\81-20-017_PL-566PLANE\DESIGN\WELLSBASIN\CAD\SHEET\81-20-017_WELLSBASIN_C20X.DWG

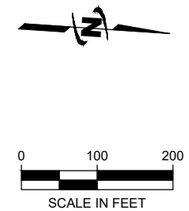

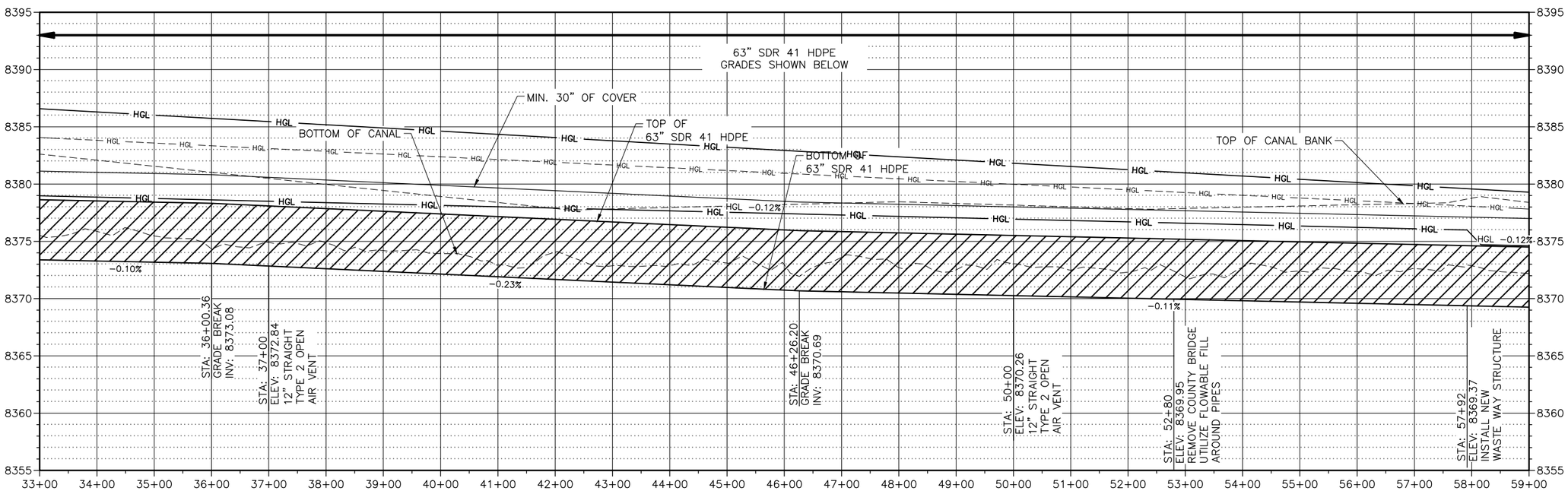

J-U-B ENGINEERS, INC.

J-U-B ENGINEERS, INC.
305 S. Main Street
Unit 6
Palisade, CO 81526
Phone: 970.208.8508
www.jub.com

PRELIMINARY PLANS

NOT FOR CONSTRUCTION

REUSE OF DRAWINGS
J-U-B SHALL RETAIN ALL COMMON LAW, STATUTORY, COPYRIGHT AND OTHER RESERVED RIGHTS OF THESE DRAWINGS, AND THE SAME SHALL NOT BE REUSED WITHOUT J-U-B'S PRIOR WRITTEN CONSENT. ANY REUSE WITHOUT WRITTEN CONSENT BY J-U-B WILL BE AT CLIENTS SOLE RISK AND WITHOUT LIABILITY OR LEGAL EXPOSURE TO J-U-B.

NO.	DESCRIPTION	BY	APR.	DATE
	REVISION			

BOSTWICK PARK WATER CONSERVANCY DISTRICT
WELLS BASIN PIPING 30% PLANS

PLAN & PROFILE

FILE : 81-20-017_WELLSBASIN_C20
JUB PROJ. # : 81-20-017
DRAWN BY: DTF
DESIGN BY: NJE
CHECKED BY: LDG
ONE INCH
AT FULL SIZE, IF NOT ONE INCH, SCALE ACCORDINGLY
LAST UPDATED: 9/19/2023

SHEET NUMBER:
C-202

Plot Date:9/19/2023 9:09 AM Plotted By: Corey Blubaum
Date Created:9/19/2023 \\JUBCENTRAL\CLIENTS\CO\BOSTWICKPARK\PROJECTS\81-20-017_PL-566\PLANE\DESIGN\WELLSBASIN\CAD\SHEET\81-20-017_WELLSBASIN_C20X.DWG

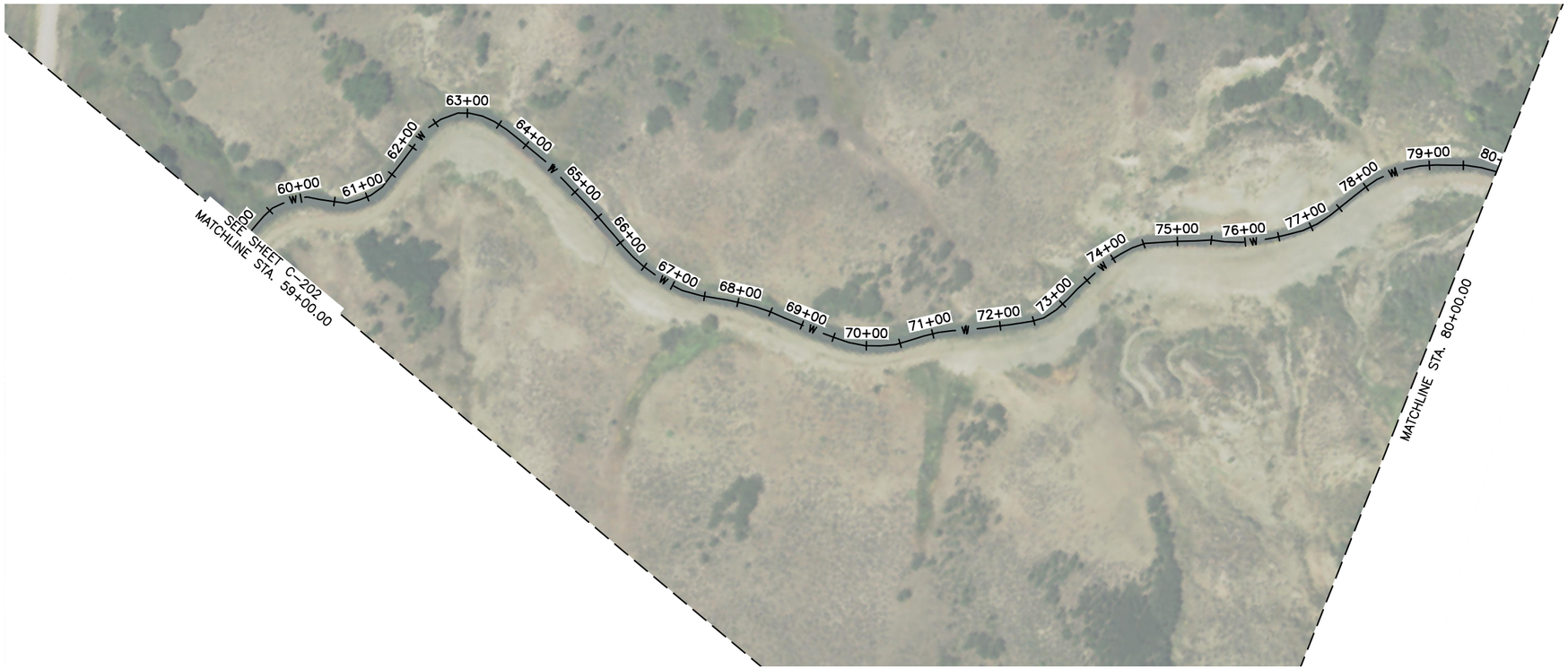

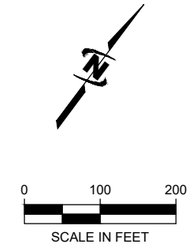

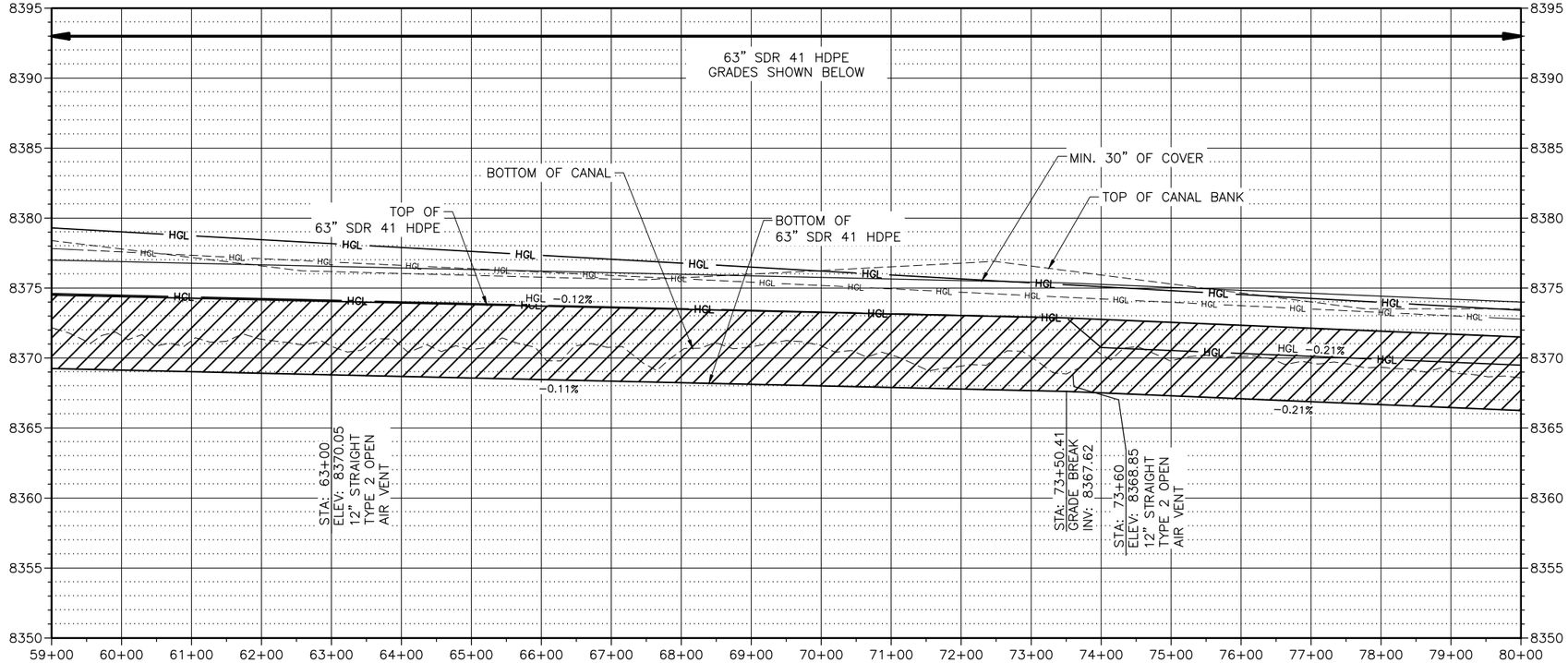

J-U-B ENGINEERS, INC.

J-U-B ENGINEERS, INC.
305 S. Main Street
Unit 6
Palisade, CO 81526
Phone: 970.208.8508
www.jub.com

PRELIMINARY PLANS

NOT FOR CONSTRUCTION

REUSE OF DRAWINGS:
J-U-B SHALL RETAIN ALL COMMON LAW, STATUTORY, COPYRIGHT AND OTHER RESERVED RIGHTS OF THESE DRAWINGS, AND THE SAME SHALL NOT BE REUSED WITHOUT J-U-B'S PRIOR WRITTEN CONSENT. ANY REUSE WITHOUT WRITTEN CONSENT BY J-U-B WILL BE AT CLIENTS SOLE RISK AND WITHOUT LIABILITY OR LEGAL EXPOSURE TO J-U-B.

REVISION

NO.	DESCRIPTION	BY	APR.	DATE

BOSTWICK PARK WATER CONSERVANCY DISTRICT
WELLS BASIN PIPING 30% PLANS

PLAN & PROFILE

FILE : 81-20-017_WELLSBASIN_C20X
JUB PROJ. # : 81-20-017
DRAWN BY: DTF
DESIGN BY: NJE
CHECKED BY: LDG

ONE INCH
AT FULL SIZE, IF NOT ONE INCH, SCALE ACCORDINGLY

LAST UPDATED: 9/19/2023

SHEET NUMBER:
C-203

Plot Date:9/19/2023 9:09 AM Plotted By: Corey Blubaum
Date Created:9/19/2023 \\JUB\CENTRAL\CLIENTS\CO\BOSTWICKPARK\PROJECTS\81-20-017_PL-56\PLANEA\DESIGN\WELLSBASIN\CAD\SHEET\81-20-017_WELLSBASIN_C20X.DWG

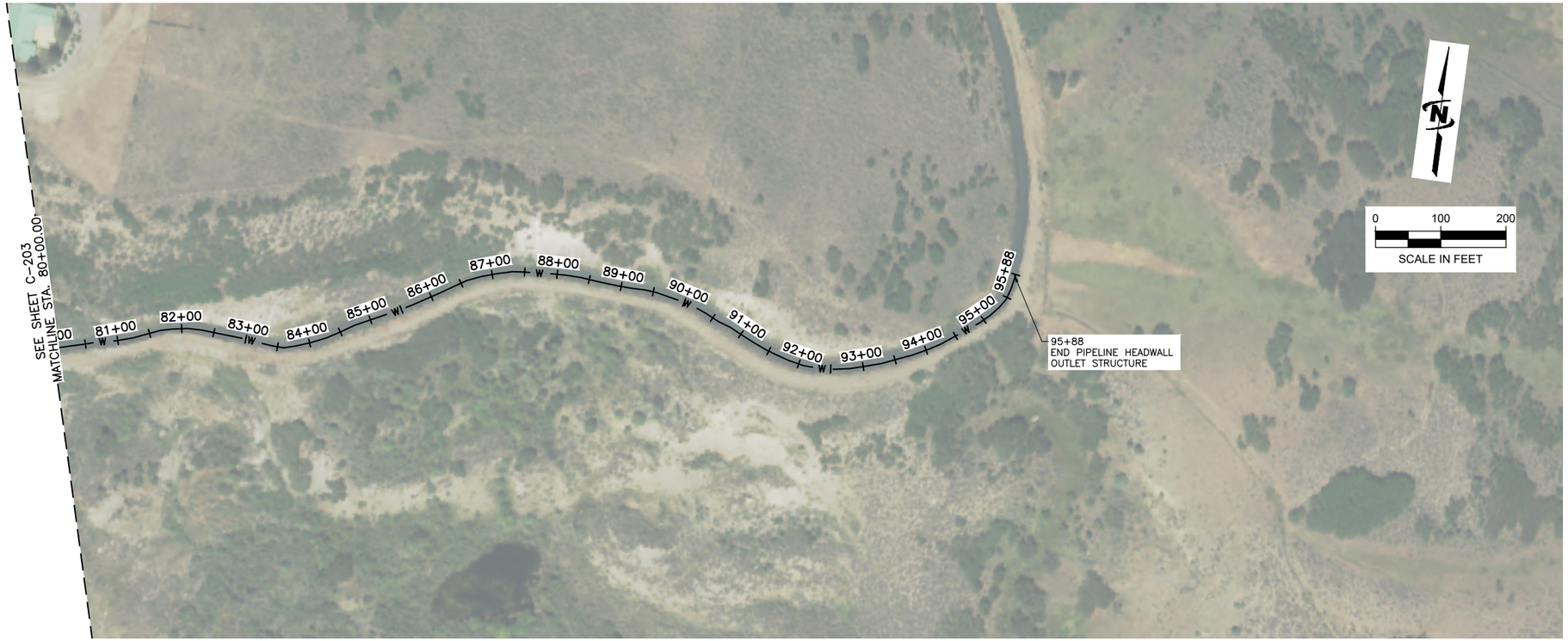

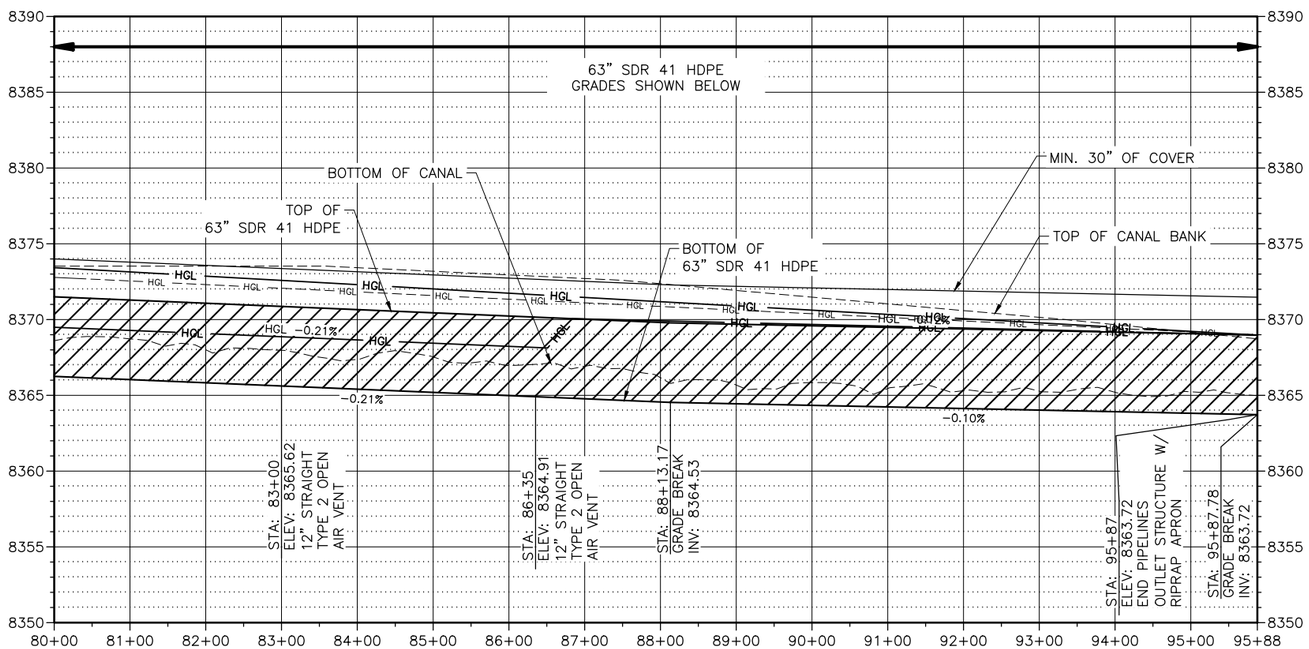

J-U-B ENGINEERS, INC.

J-U-B ENGINEERS, INC.
305 S. Main Street
Unit 6
Palisade, CO 81526

Phone: 970.208.8508
www.jub.com

PRELIMINARY PLANS

NOT FOR CONSTRUCTION

REUSE OF DRAWINGS
J-U-B SHALL RETAIN ALL COMMON LAW, STATUTORY, COPYRIGHT AND OTHER RESERVED RIGHTS OF THESE DRAWINGS, AND THE SAME SHALL NOT BE REUSED WITHOUT J-U-B'S PRIOR WRITTEN CONSENT. ANY REUSE WITHOUT WRITTEN CONSENT BY J-U-B WILL BE AT CLIENTS SOLE RISK AND WITHOUT LIABILITY OR LEGAL EXPOSURE TO J-U-B.

REVISION			
NO.	DESCRIPTION	BY	APR. DATE

BOSTWICK PARK WATER CONSERVANCY DISTRICT
WELLS BASIN PIPING 30% PLANS

PLAN & PROFILE

FILE : 81-20-017_WELLSBASIN_C20X
JUB PROJ. # : 81-20-017
DRAWN BY: DTF
DESIGN BY: NJE
CHECKED BY: LDG

ONE INCH
AT FULL SIZE, IF NOT ONE INCH, SCALE ACCORDINGLY

LAST UPDATED: 9/19/2023

SHEET NUMBER:
C-204

Plot Date:9/19/2023 9:10 AM Plotted By: Corey Blubaum
Date Created:9/19/2023 \\JUBCENTRAL\CLIENTS\CO\BOSTWICKPARK\PROJECTS\81-20-017_PL-566\PLANEA\DESIGN\WELLSBASIN\CAD\SHEET\81-20-017_WELLSBASIN_C20X.DWG

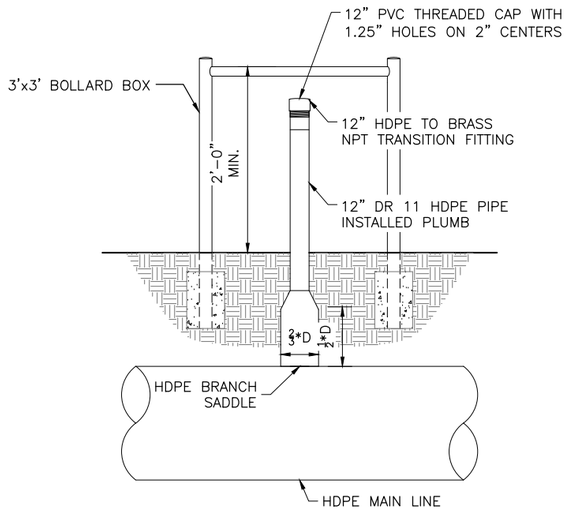

B1 TYPE 1 OPEN AIR VENT
SCALE:N.T.S.

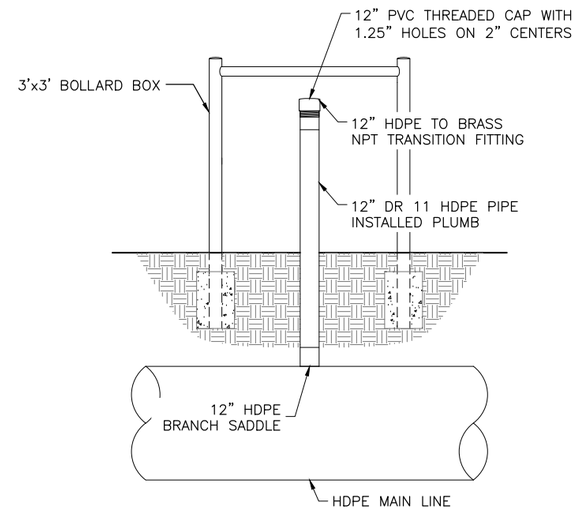

B2 TYPE 2 OPEN AIR VENT
SCALE:N.T.S.

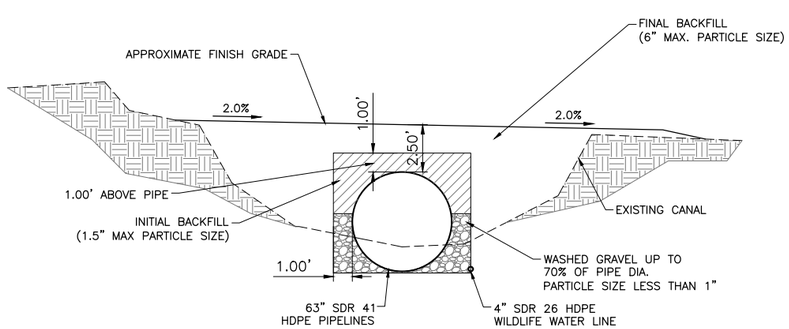

D1 TYPICAL SECTION VIEW
SCALE:N.T.S.

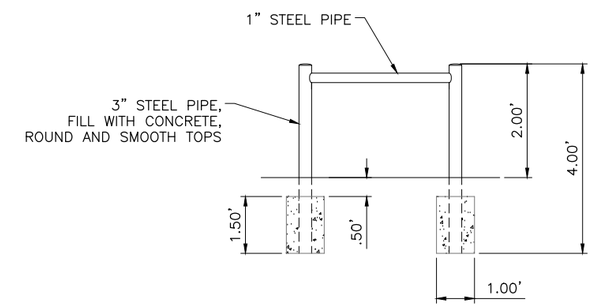

NOTES:
1. BOLLARD BOX TO BE HOT-DIP GALVANIZED AS A SINGLE UNIT PRIOR TO INSTALLATION.
2. TYPICAL FOR OTHER BOLLARD BOX SIZES CALLED OUT IN THE PLANS.

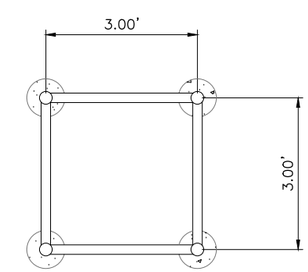

D3 3' BOLLARD BOX
SCALE:N.T.S.

J-U-B ENGINEERS, INC.
J-U-B ENGINEERS, INC.
305 S. Main Street
Unit 6
Palisade, CO 81526
Phone: 970.208.8508
www.jub.com

PRELIMINARY PLANS

NOT FOR CONSTRUCTION

REUSE OF DRAWINGS
J-U-B SHALL RETAIN ALL COMMON LAW, STATUTORY, COPYRIGHT AND OTHER RESERVED RIGHTS OF THESE DRAWINGS, AND THE SAME SHALL NOT BE REUSED WITHOUT J-U-B'S PRIOR WRITTEN CONSENT. ANY REUSE WITHOUT WRITTEN CONSENT BY J-U-B WILL BE AT CLIENTS SOLE RISK AND WITHOUT LIABILITY OR LEGAL EXPOSURE TO J-U-B.

NO.	DESCRIPTION	BY	APR.	DATE

REVISION

BOSTWICK PARK WATER CONSERVANCY DISTRICT
WELLS BASIN PIPING 30% PLANS

DETAILS

FILE: 81-20-017_WELLSBASIN_C501
JUB PROJ. #: 81-20-017
DRAWN BY: DTF
DESIGN BY: NJE
CHECKED BY: LDG
ONE INCH
AT FULL SIZE, IF NOT ONE INCH, SCALE ACCORDINGLY
LAST UPDATED: 9/19/2023

SHEET NUMBER:
C-501

Plot Date:9/19/2023 9:10 AM Plotted By: Corey Blubaum
Date Created:10/21/2021 \\JUB\CENTRAL\CLIENTS\CO\BOSTWICKPARK\PROJECTS\81-20-017_PL-566PLANE\DESIGN\WELLSBASIN\CAD\SHEET\81-20-017_WELLSBASIN_C501X.DWG

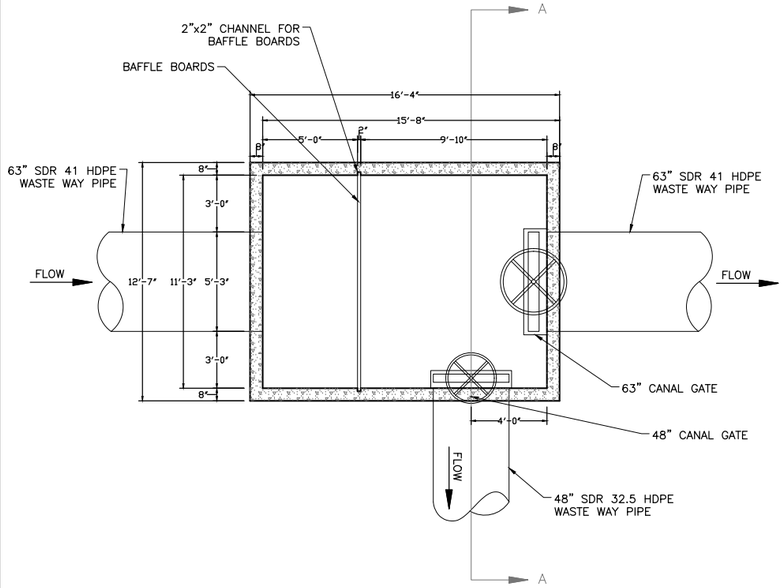

B1 CONCRETE WASTE WAY STRUCTURE
SCALE:N.T.S.

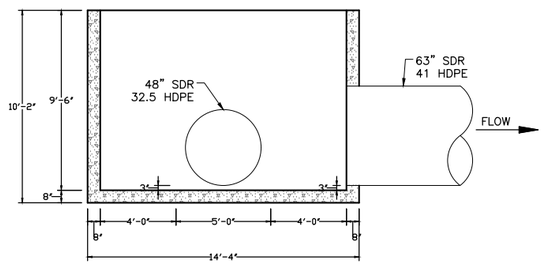

B3 SECTION A:A CONCRETE WASTE WAY STRUCTURE
SCALE:N.T.S.

J-U-B ENGINEERS, INC.

J-U-B ENGINEERS, INC.
305 S. Main Street
Unit 6
Palisade, CO 81526
Phone: 970.208.8508
www.jub.com

PRELIMINARY PLANS

NOT FOR CONSTRUCTION

REUSE OF DRAWINGS
J-U-B SHALL RETAIN ALL COMMON LAW, STATUTORY, COPYRIGHT AND OTHER RESERVED RIGHTS OF THESE DRAWINGS, AND THE SAME SHALL NOT BE REUSED WITHOUT J-U-B'S PRIOR WRITTEN CONSENT. ANY REUSE WITHOUT WRITTEN CONSENT BY J-U-B WILL BE AT CLIENTS SOLE RISK AND WITHOUT LIABILITY OR LEGAL EXPOSURE TO J-U-B.

NO.	DESCRIPTION	BY	APR.	DATE
	REVISION			

BOSTWICK PARK WATER CONSERVANCY DISTRICT
WELLS BASIN PIPING 30% PLANS

DETAILS

FILE : 81-20-017_WELLSBASIN_C500
JUB PROJ. # : 81-20-017
DRAWN BY: DTF
DESIGN BY: NJE
CHECKED BY: LDG

ONE INCH
AT FULL SIZE, IF NOT ONE INCH, SCALE ACCORDINGLY

LAST UPDATED: 9/19/2023

SHEET NUMBER:
C-502

Plot Date:9/19/2023 9:10 AM Plotted By: Corey Blubaum
Date Created:10/21/2021 \\JUB\CENTRAL\CLIENTS\CO\BOSTWICKPARK\PROJECTS\81-20-017_PL-566\PLANEA\DESIGN\WELLSBASIN\CAD\SHEET\81-20-017_WELLSBASIN_C5XX.DWG

BOSTWICK PARK WATER CONSERVANCY DISTRICT

COAL HILL PIPING
30% PLANS

September 2023

PRELIMINARY PLANS NOT FOR CONSTRUCTION

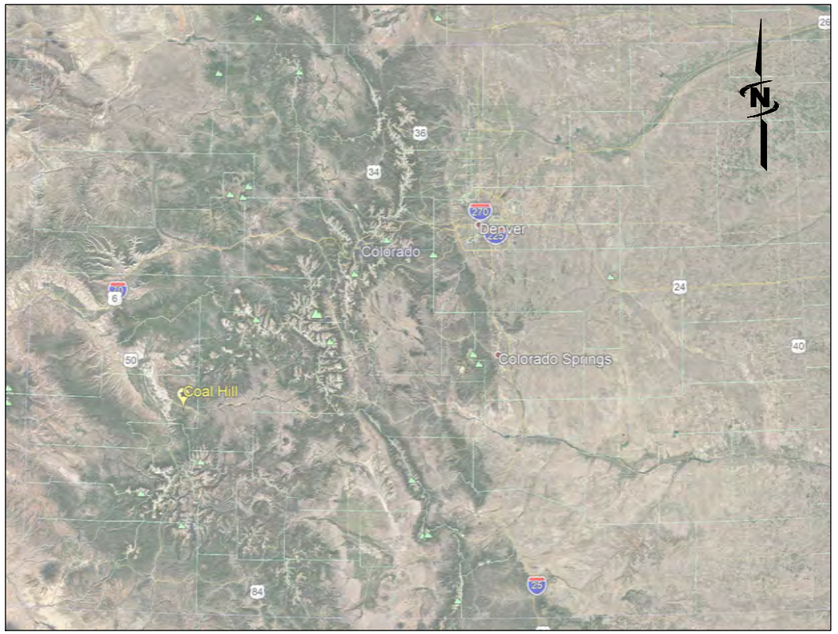

AREA MAP

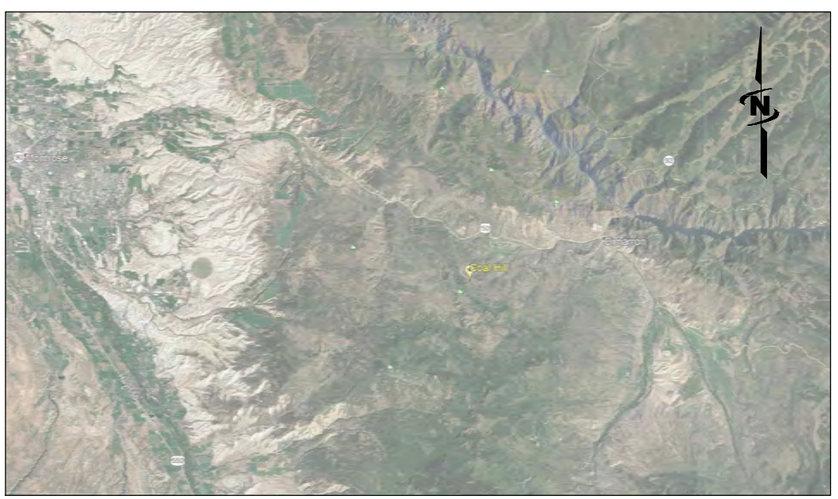

VICINITY MAP

INDEX OF SHEETS	
Sheet Number	Sheet Title
GENERAL	
G-001	COVER SHEET
CIVIL	
C-101	ALIGNMENT
C-201	PLAN & PROFILE
C-202	PLAN & PROFILE
C-203	PLAN & PROFILE
C-501	DETAILS

PROJECT NO.
81-20-017

J-U-B ENGINEERS, INC.

305 Main Street, Palisade, CO 81526
p 970 208 8508 w www.jub.com

THE LANGDON GROUP
GATEWAY MAPPING INC.

J-U-B FAMILY OF COMPANIES

REUSE OF DOCUMENTS

J-U-B grants to CLIENT a nonexclusive, non-transferable license to use the Drawings, Specifications and/or Contract Documents (Documents) as follows:

CLIENT may make and retain copies of the Documents for reference, but J-U-B shall retain all common law, statutory and other reserved rights, including the copyright thereto, and the same shall not be reused on this Project or any other Project without J-U-B's prior written consent. Distribution of Documents to meet regulatory or permitting requirements, or for similar purposes, in connection with the Project, including but not limited to distribution to contractors or subcontractors for the performance of their work, is not to be construed as publication adversely affecting the reserved rights of J-U-B. The Documents are not intended for use in creating dtm for grading or earthwork, survey staking layout (unless specifically identified as such in the documents), or property boundary layouts.

Any reuse without written consent by J-U-B, or without verification or adoption by J-U-B for the specific purpose intended by the reuse, will be at CLIENT's sole risk and without liability or legal exposure to J-U-B. The CLIENT shall release, defend, indemnify, and hold J-U-B harmless from any claims, damages, actions or causes of action, losses, and expenses, including reasonable attorneys' and expert fees, arising out of or resulting from such reuse.

If the Documents are provided in electronic format, the electronic documents are subject to the provisions of J-U-B's "electronic document/data limited license" found at edocs.jub.com

LAST UPDATED: 9/18/2023

SHEET NUMBER:
G-001

Plot Date:9/18/2023 \\JUB\CENTRAL\CLIENTS\CO\BOSTWICKPARK\PROJECTS\81-20-017_PL-566PLANEA\DESIGN\COALHILL\CAD\SHEET\81_20_017_COALHILL-63_G00X.DWG

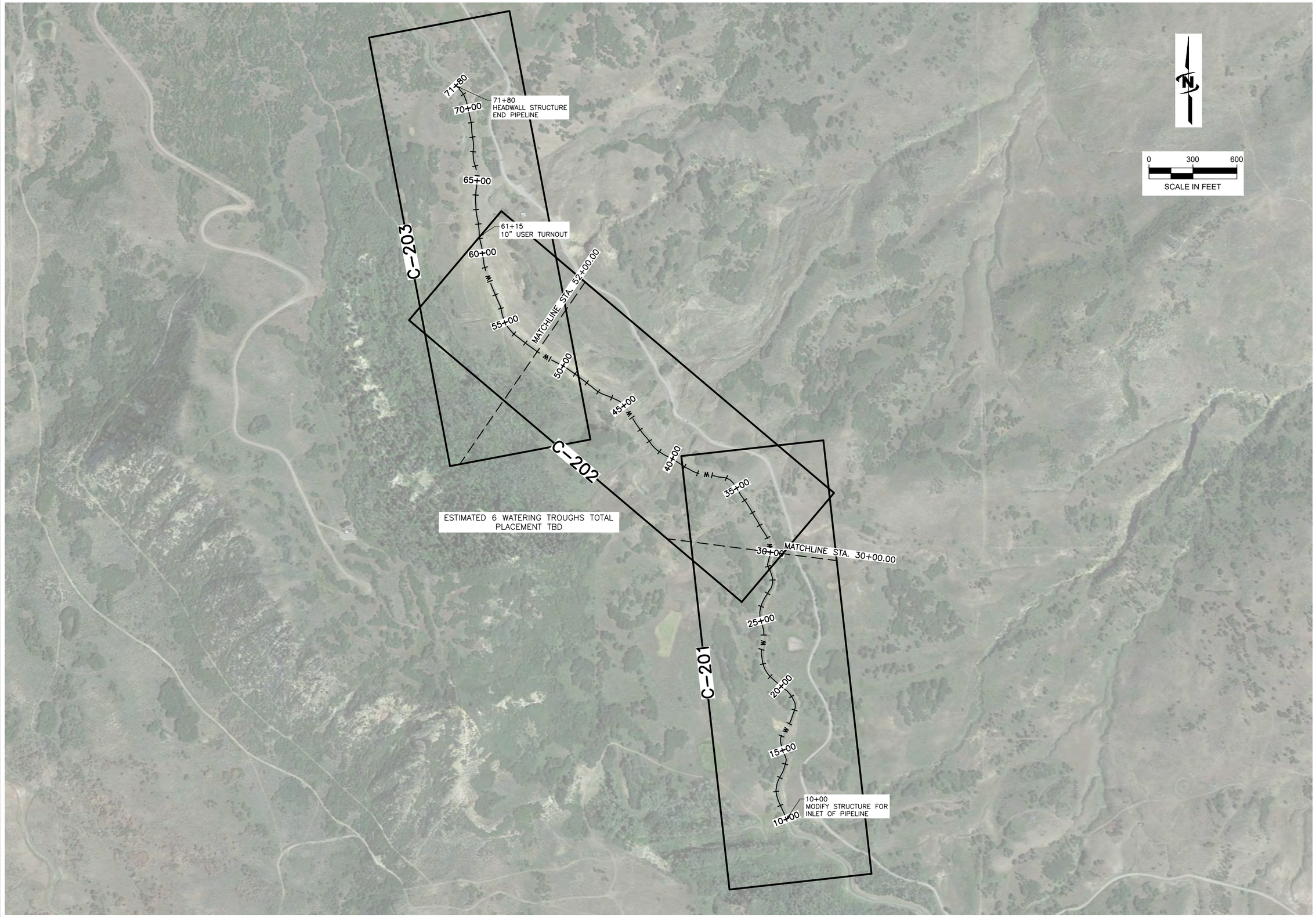

Plot Date:9/18/2023 1:21 PM Plotted By: Corey Blubaum
Date Created:10/21/2021 \\JUB\CENTRAL\CLIENTS\CO\BOSTWICKPARK\PROJECTS\81-20-017_PL-566\PLANE\DESIGN\COALHILL\CAD\SHEET\81_20_017_COALHILL-63_C10X.DWG

J-U-B ENGINEERS, INC.

J-U-B ENGINEERS, INC.
305 S. Main Street
Unit 6
Palisade, CO 81526
Phone: 970.208.8508
www.jub.com

PRELIMINARY PLANS

NOT FOR CONSTRUCTION

REUSE OF DRAWINGS:
J-U-B SHALL RETAIN ALL COMMON LAW, STATUTORY, COPYRIGHT AND OTHER RESERVED RIGHTS OF THESE DRAWINGS, AND THE SAME SHALL NOT BE REUSED WITHOUT J-U-B'S PRIOR WRITTEN CONSENT. ANY REUSE WITHOUT WRITTEN CONSENT BY J-U-B WILL BE AT CLIENTS SOLE RISK AND WITHOUT LIABILITY OR LEGAL EXPOSURE TO J-U-B.

REVISION

NO.	DESCRIPTION	BY	APR.	DATE

BOSTWICK PARK WATER CONSERVANCY DISTRICT
COAL HILL 30% PLANS

ALIGNMENT

FILE : 81_20_017_COALHILL-63_C10X
JUB PROJ. # : 81-20-017
DRAWN BY: ----
DESIGN BY: ----
CHECKED BY: ----

ONE INCH
AT FULL SIZE, IF NOT ONE INCH, SCALE ACCORDINGLY

LAST UPDATED: 10/21/2021

SHEET NUMBER:
C-101

N

0 100 200

SCALE IN FEET

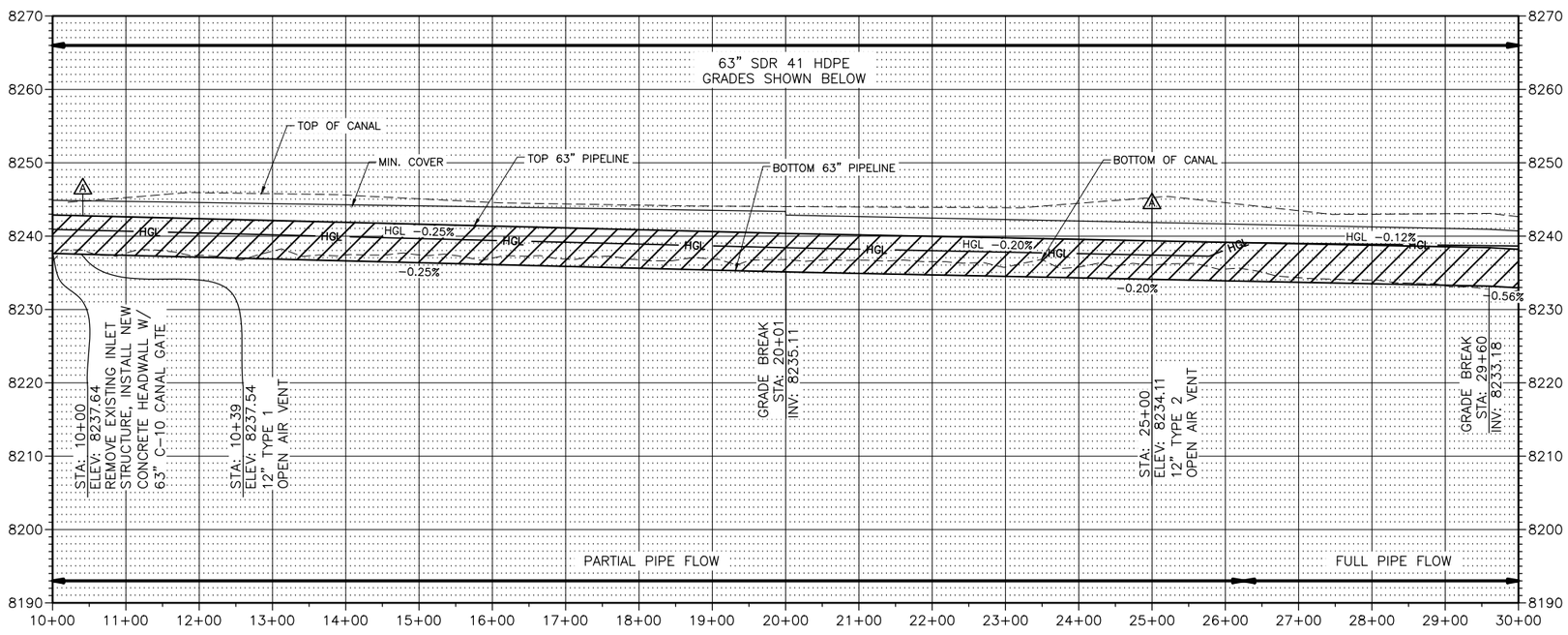

J-U-B ENGINEERS, INC.

J-U-B ENGINEERS, INC.
305 S. Main Street
Unit 6
Palisade, CO 81526

Phone: 970.208.8508
www.jub.com

PRELIMINARY PLANS

NOT FOR CONSTRUCTION

REUSE OF DRAWINGS
J-U-B SHALL RETAIN ALL COMMON LAW, STATUTORY, COPYRIGHT AND OTHER RESERVED RIGHTS OF THESE DRAWINGS, AND THE SAME SHALL NOT BE REUSED WITHOUT J-U-B'S PRIOR WRITTEN CONSENT. ANY REUSE WITHOUT WRITTEN CONSENT BY J-U-B WILL BE AT CLIENTS SOLE RISK AND WITHOUT LIABILITY OR LEGAL EXPOSURE TO J-U-B.

NO.	REVISION	BY	APR.	DATE

NO.	DESCRIPTION

BOSTWICK PARK WATER CONSERVANCY DISTRICT
COAL HILL PIPING 30% PLANS

PLAN & PROFILE

FILE: 81_20_017_COALHILL-63_C20X
JUB PROJ. #: 81-20-017
DRAWN BY: ----
DESIGN BY: ----
CHECKED BY: ----

ONE INCH
AT FULL SIZE, IF NOT ONE INCH, SCALE ACCORDINGLY

LAST UPDATED: 9/18/2023

SHEET NUMBER:
C-201

Plot Date:9/18/2023 1:22 PM Plotted By: Corey Blubaum
Date Created:10/18/2021 \\JUB\CENTRAL\CLIENTS\CO\BOSTWICKPARK\PROJECTS\81-20-017_PL-566\PLANE\DESIGN\COALHILL\CAD\SHEET\81_20_017_COALHILL-63_C20X.DWG

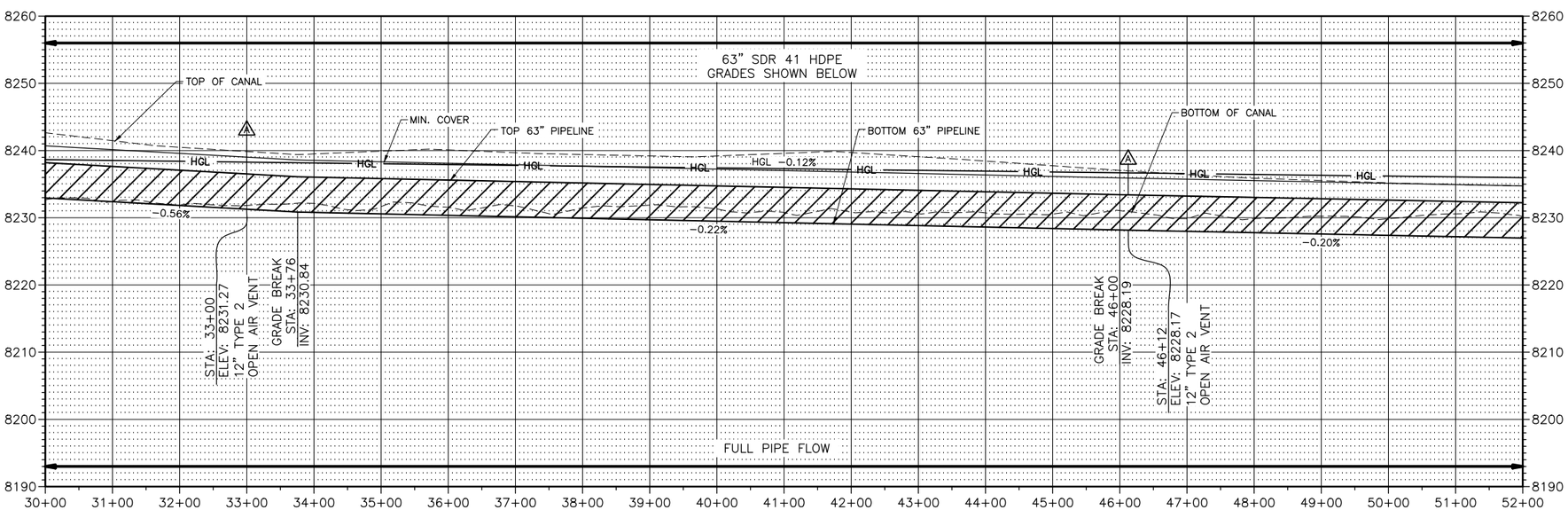

0 100 200
SCALE IN FEET

J-U-B ENGINEERS, INC.
J-U-B ENGINEERS, INC.
305 S. Main Street
Unit 6
Palisade, CO 81526
Phone: 970.208.8508
www.jub.com

PRELIMINARY PLANS

NOT FOR CONSTRUCTION

REUSE OF DRAWINGS
J-U-B SHALL RETAIN ALL COMMON LAW, STATUTORY, COPYRIGHT AND OTHER RESERVED RIGHTS OF THESE DRAWINGS, AND THE SAME SHALL NOT BE REUSED WITHOUT J-U-B'S PRIOR WRITTEN CONSENT. ANY REUSE WITHOUT WRITTEN CONSENT BY J-U-B WILL BE AT CLIENTS SOLE RISK AND WITHOUT LIABILITY OR LEGAL EXPOSURE TO J-U-B.

NO.	DESCRIPTION	BY	APR.	DATE
	REVISION			

BOSTWICK PARK WATER CONSERVANCY DISTRICT
COAL HILL PIPING 30% PLANS

PLAN & PROFILE

FILE : 81_20_017_COALHILL-63_C20X
JUB PROJ. # : 81-20-017
DRAWN BY: ----
DESIGN BY: ----
CHECKED BY: ----
ONE INCH
AT FULL SIZE, IF NOT ONE INCH, SCALE ACCORDINGLY
LAST UPDATED: 9/18/2023

SHEET NUMBER:
C-202

Plot Date:9/18/2023 1:22 PM Plotted By: Corey Blubaum
Date Created:10/18/2021 \\JUB\CENTRAL\CLIENTS\CO\BOSTWICKPARK\PROJECTS\81-20-017_PL-566PLANE\DESIGN\COALHILL\CAD\SHEETS\81_20_017_COALHILL-63_C20X.DWG

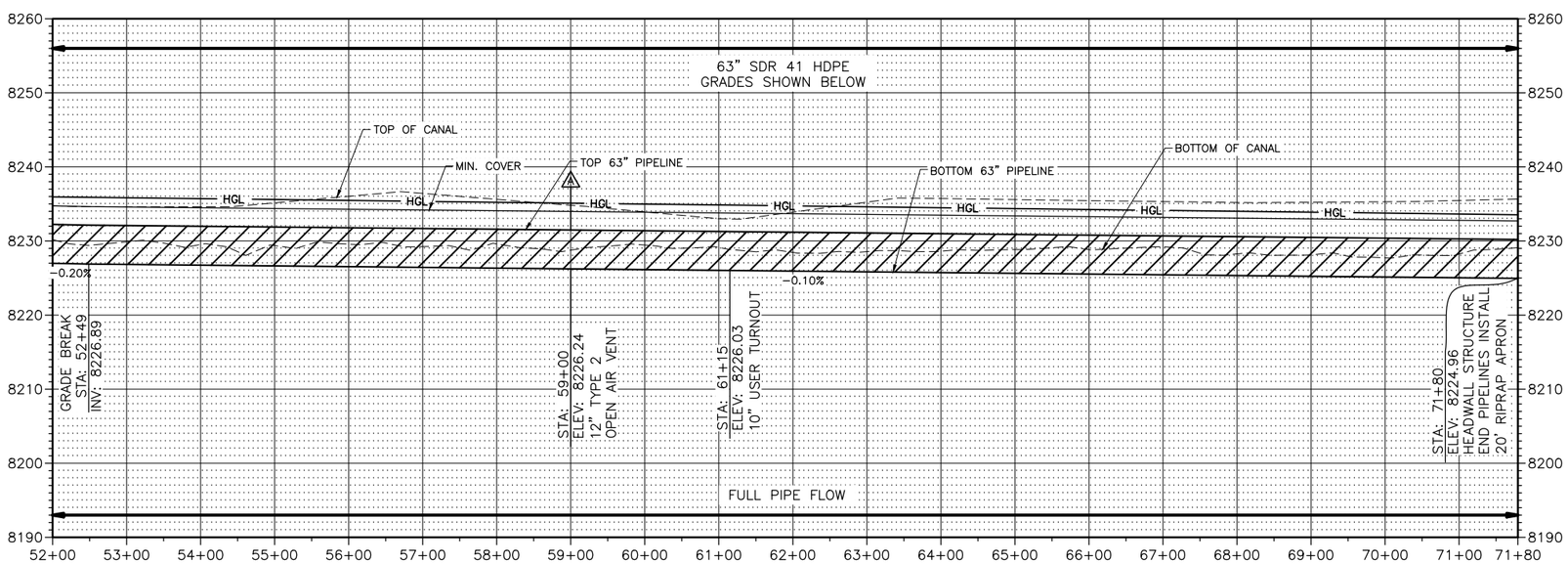

J-U-B ENGINEERS, INC.

J-U-B ENGINEERS, INC.
305 S. Main Street
Unit 6
Palisade, CO 81526
Phone: 970.208.8508
www.jub.com

PRELIMINARY PLANS

NOT FOR CONSTRUCTION

REUSE OF DRAWINGS:
J-U-B SHALL RETAIN ALL COMMON LAW, STATUTORY, COPYRIGHT AND OTHER RESERVED RIGHTS OF THESE DRAWINGS, AND THE SAME SHALL NOT BE REUSED WITHOUT J-U-B'S PRIOR WRITTEN CONSENT. ANY REUSE WITHOUT WRITTEN CONSENT BY J-U-B WILL BE AT CLIENTS SOLE RISK AND WITHOUT LIABILITY OR LEGAL EXPOSURE TO J-U-B.

NO.	DESCRIPTION	BY	APR.	DATE
	REVISION			

BOSTWICK PARK WATER CONSERVANCY DISTRICT
COAL HILL PIPING 30% PLANS

PLAN & PROFILE

FILE : 81_20_017_COALHILL-63_C20X
JUB PROJ. # : 81-20-017
DRAWN BY: ----
DESIGN BY: ----
CHECKED BY: ----

ONE INCH
AT FULL SIZE, IF NOT ONE INCH, SCALE ACCORDINGLY

LAST UPDATED: 9/18/2023

SHEET NUMBER:
C-203

Plot Date:9/18/2023 1:22 PM Plotted By: Corey Blubaum
Date Created:10/18/2021 \\JUB\CENTRAL\CLIENTS\CO\BOSTWICKPARK\PROJECTS\81-20-017_PL-566\PLANE\DESIGN\COALHILL\CAD\SHEET\81_20_017_COALHILL-63_C20X.DWG

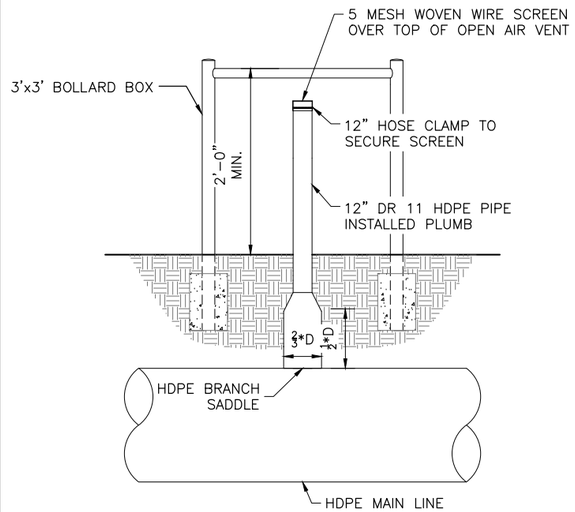

B1 TYPE 1 OPEN AIR VENT
SCALE:N.T.S.

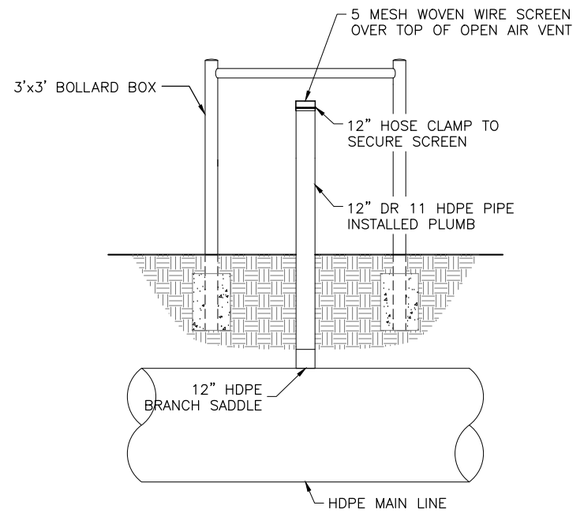

B2 TYPE 2 OPEN AIR VENT
SCALE:N.T.S.

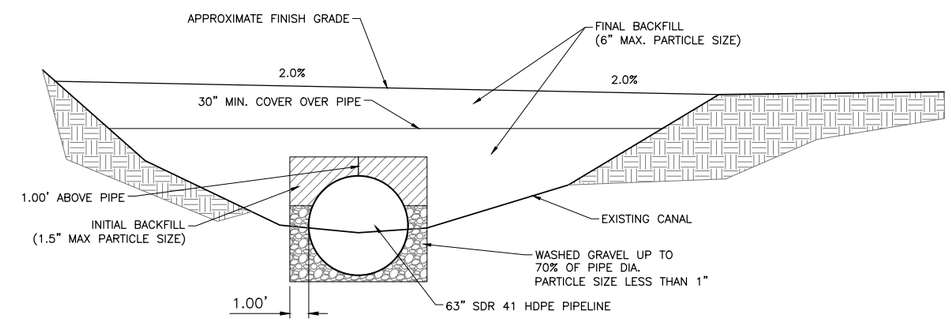

B3 TYPICAL SECTION VIEW
SCALE:N.T.S.

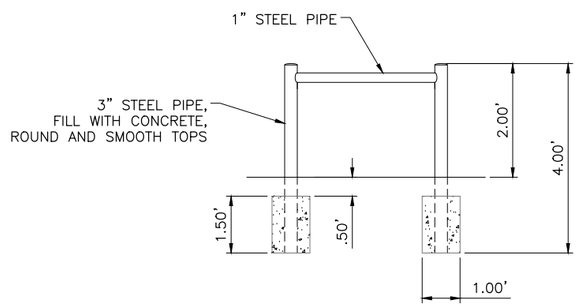

NOTES:
1. BOLLARD BOX TO BE HOT-DIP GALVANIZED AS A SINGLE UNIT PRIOR TO INSTALLATION.
2. TYPICAL FOR OTHER BOLLARD BOX SIZES CALLED OUT IN THE PLANS.

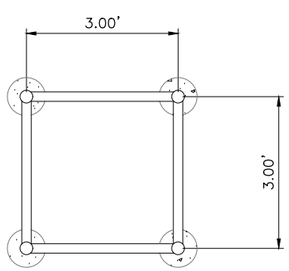

D1 3' BOLLARD BOX
SCALE:N.T.S.

J-U-B ENGINEERS, INC.
J-U-B ENGINEERS, INC.
305 S. Main Street
Unit 6
Palisade, CO 81526
Phone: 970.208.8508
www.jub.com

PRELIMINARY PLANS

NOT FOR CONSTRUCTION

REUSE OF DRAWINGS:
J-U-B SHALL RETAIN ALL COMMON LAW, STATUTORY, COPYRIGHT AND OTHER RESERVED RIGHTS OF THESE DRAWINGS, AND THE SAME SHALL NOT BE REUSED WITHOUT J-U-B'S PRIOR WRITTEN CONSENT. ANY REUSE WITHOUT WRITTEN CONSENT BY J-U-B WILL BE AT CLIENTS SOLE RISK AND WITHOUT LIABILITY OR LEGAL EXPOSURE TO J-U-B.

REVISION

NO.	DESCRIPTION	BY	APR.	DATE

BOSTWICK PARK WATER CONSERVANCY DISTRICT
COAL HILL PIPING 30% PLANS

DETAILS

FILE: 81_20_017_COALHILL-63_C50X
JUB PROJ. #: 81-20-017
DRAWN BY: ----
DESIGN BY: ----
CHECKED BY: ----
ONE INCH
AT FULL SIZE, IF NOT ONE INCH, SCALE ACCORDINGLY
LAST UPDATED: 9/18/2023

SHEET NUMBER:
C-501

Plot Date:9/18/2023 1:22 PM Plotted By: Corey Blubaum
Date Created:8/18/2022 \\JUB\CENTRAL\CLIENTS\CO\BOSTWICKPARK\PROJECTS\81-20-017_PL-56\PLANE\DESIGN\COALHILL\CAD\SHEET\81_20_017_COALHILL-63_C50X.DWG

BOSTWICK PARK WATER CONSERVANCY DISTRICT

SLIDE POINT PIPING
30% PLANS
September 2023

PRELIMINARY PLANS NOT FOR CONSTRUCTION

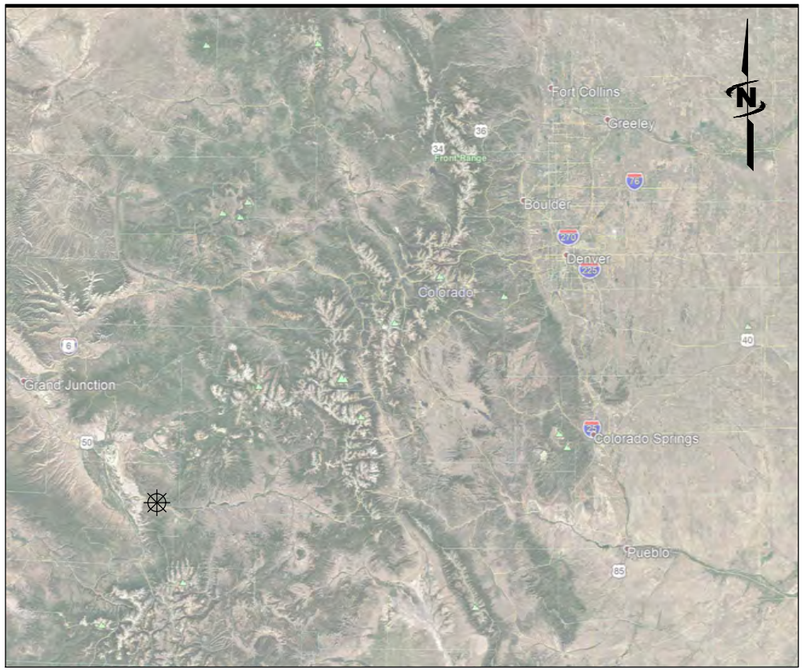

AREA MAP

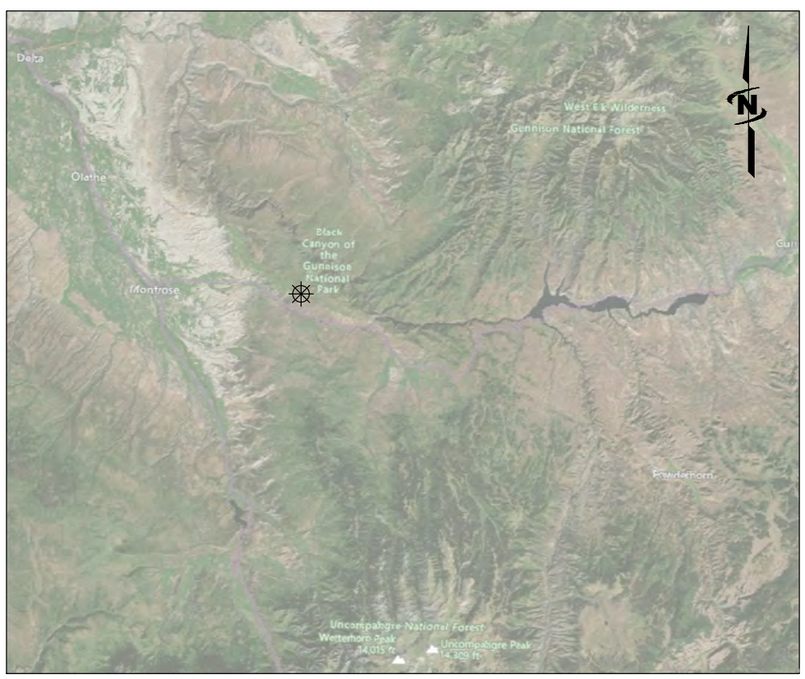

VICINITY MAP

INDEX OF SHEETS

PROJECT NO. 81-20-017

J-U-B ENGINEERS, INC.

THE LANGDON GROUP

GATEWAY MAPPING INC.

J-U-B FAMILY OF COMPANIES

REUSE OF DOCUMENTS

J-U-B grants to CLIENT a nonexclusive, non-transferable license to use the Drawings, Specifications and/or Contract Documents (Documents) as follows:

CLIENT may make and retain copies of the Documents for reference, but J-U-B shall retain all common law, statutory and other reserved rights, including the copyright thereto, and the same shall not be reused on this Project or any other Project without J-U-B's prior written consent. Distribution of Documents to meet regulatory or permitting requirements, or for similar purposes, in connection with the Project, including but not limited to distribution to contractors or subcontractors for the performance of their work, is not to be construed as publication adversely affecting the reserved rights of J-U-B. The Documents are not intended for use in creating dtm for grading or earthwork, survey staking layout (unless specifically identified as such in the documents), or property boundary layouts.

Any reuse without written consent by J-U-B, or without verification or adoption by J-U-B for the specific purpose intended by the reuse, will be at CLIENT's sole risk and without liability or legal exposure to J-U-B. The CLIENT shall release, defend, indemnify, and hold J-U-B harmless from any claims, damages, actions or causes of action, losses, and expenses, including reasonable attorneys' and expert fees, arising out of or resulting from such reuse.

If the Documents are provided in electronic format, the electronic documents are subject to the provisions of J-U-B's "electronic document/data limited license" found at edocs.jub.com

LAST UPDATED: 9/18/2023

SHEET NUMBER:

G-001

Plot Date:9/18/2023 \\JUB\CENTRAL\CLIENTS\CO\BOSTWICKPARK\PROJECTS\81-20-017_PL-566\PLANE\DESIGN\SLIDEPOINT\CAD\SHEET\81-20-017_SLIDE_G-00X.DWG

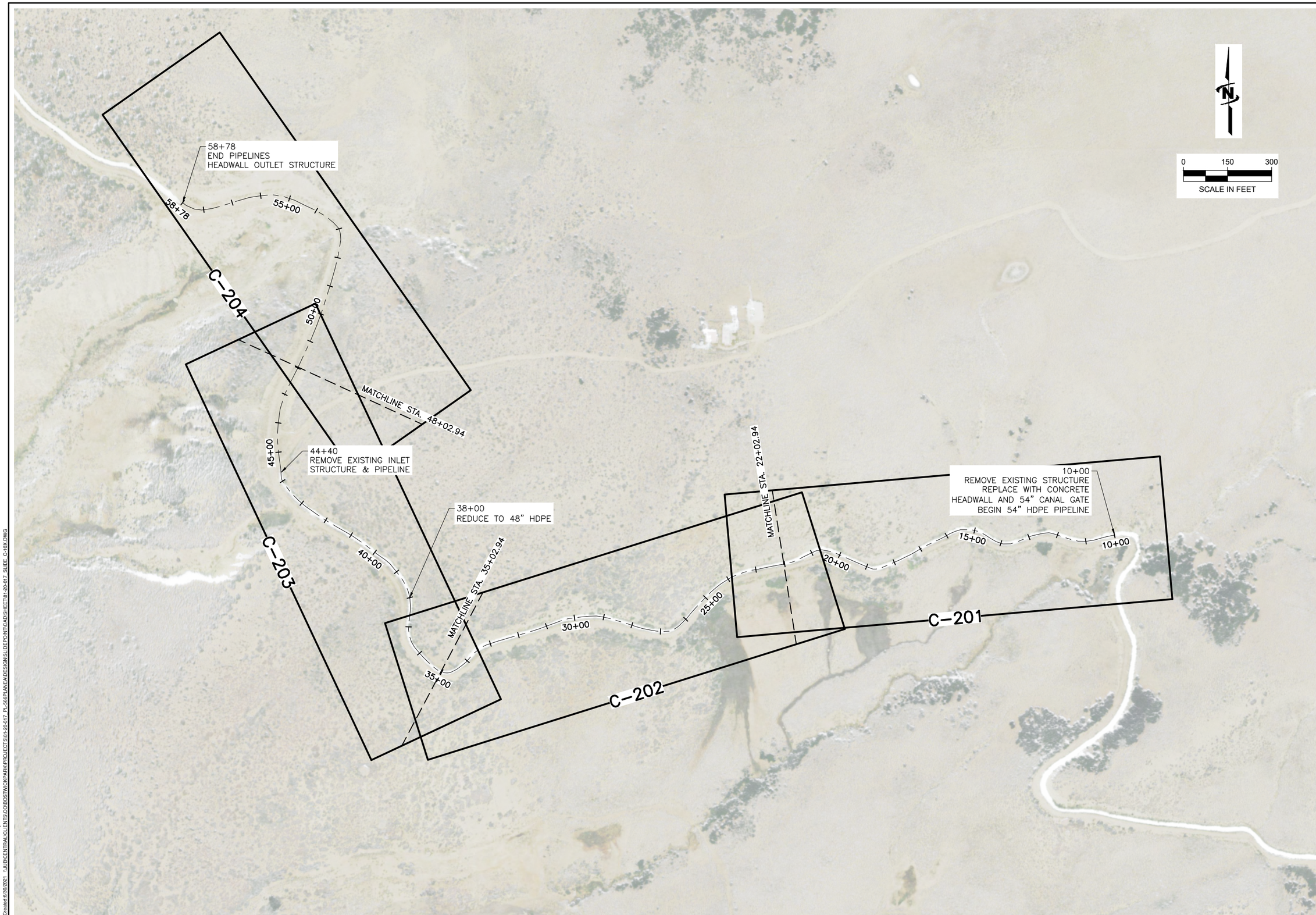

Plot Date:9/18/2023 4:30 PM, Plotted By: Corey Blubaum
Date Created:6/30/2021 \\JUB\CENTRAL\CLIENTS\CO\BOSTWICKPARK\PROJECTS\81-20-017_PL-566PLANEA\DESIGN\SLIDEPOINT\CAD\SHEETS\81-20-017_SLIDE_C-10X.DWG

J-U-B ENGINEERS, INC.

J-U-B ENGINEERS, INC.
305 S. Main Street
Unit 6
Palisade, CO 81526
Phone: 970.208.8508
www.jub.com

PRELIMINARY PLANS

NOT FOR CONSTRUCTION

REUSE OF DRAWINGS
J-U-B SHALL RETAIN ALL COMMON LAW, STATUTORY, COPYRIGHT AND OTHER RESERVED RIGHTS OF THESE DRAWINGS, AND THE SAME SHALL NOT BE REUSED WITHOUT J-U-B'S PRIOR WRITTEN CONSENT. ANY REUSE WITHOUT WRITTEN CONSENT BY J-U-B WILL BE AT CLIENTS SOLE RISK AND WITHOUT LIABILITY OR LEGAL EXPOSURE TO J-U-B.

NO.	DESCRIPTION	BY	APR.	DATE
	REVISION			

BOSTWICK PARK WATER CONSERVANCY DISTRICT
SLIDE POINT PIPING 30% PLANS

SITE PLAN

FILE : 81-20-017_SLIDE_C-10X
JUB PROJ. # : 81-20-017
DRAWN BY: DTF
DESIGN BY: NJE
CHECKED BY: LDG

ONE INCH
AT FULL SIZE, IF NOT ONE INCH, SCALE ACCORDINGLY

LAST UPDATED: 6/30/2021

SHEET NUMBER:
C-101

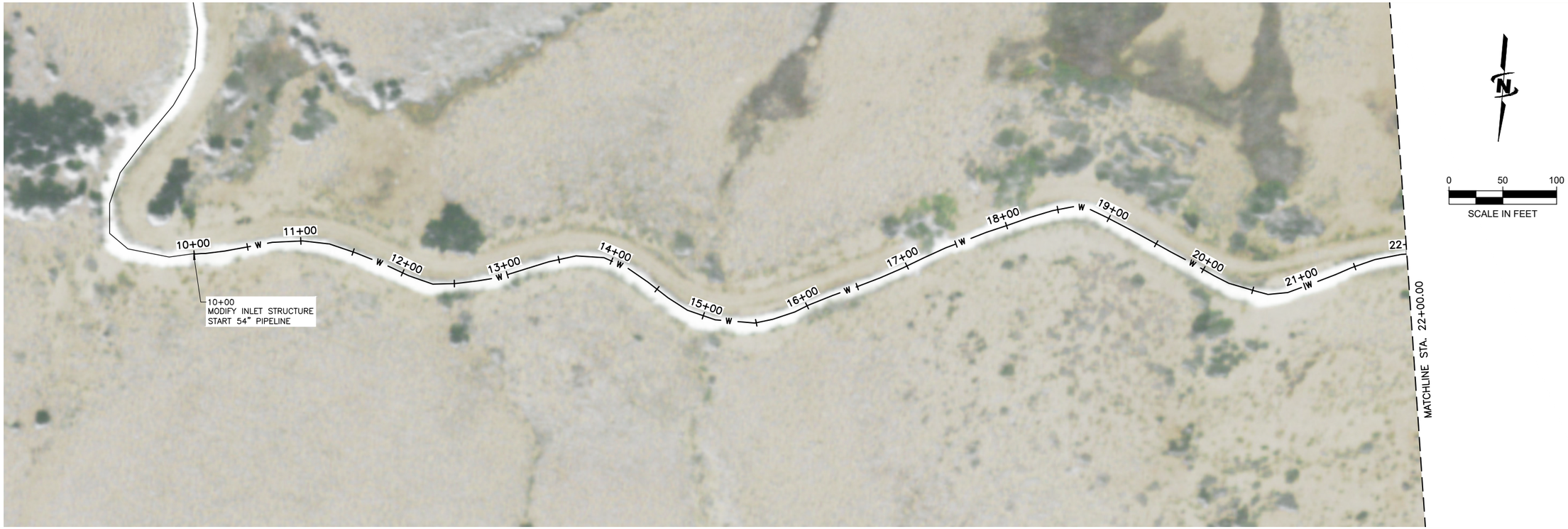

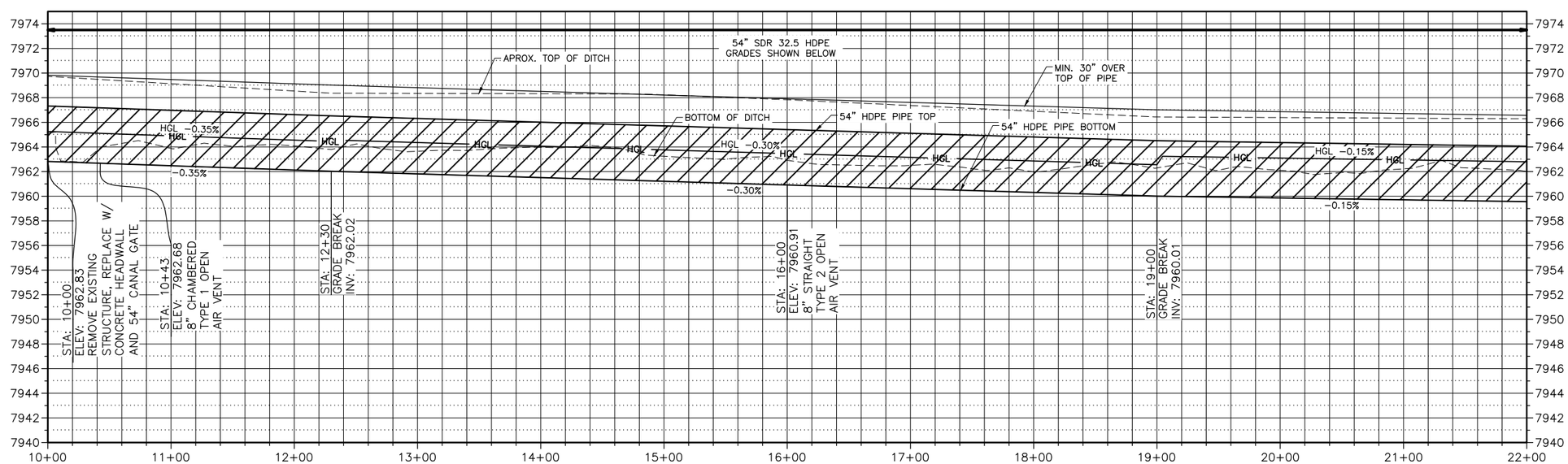

J-U-B ENGINEERS, INC.

J-U-B ENGINEERS, INC.
305 S. Main Street
Unit 6
Palisade, CO 81526
Phone: 970.208.8508
www.jub.com

PRELIMINARY PLANS

NOT FOR CONSTRUCTION

REUSE OF DRAWINGS
J-U-B SHALL RETAIN ALL COMMON LAW, STATUTORY, COPYRIGHT AND OTHER RESERVED RIGHTS OF THESE DRAWINGS, AND THE SAME SHALL NOT BE REUSED WITHOUT J-U-B'S PRIOR WRITTEN CONSENT. ANY REUSE WITHOUT WRITTEN CONSENT BY J-U-B WILL BE AT CLIENTS SOLE RISK AND WITHOUT LIABILITY OR LEGAL EXPOSURE TO J-U-B.

REVISION			
NO.	DESCRIPTION	BY	APR. DATE

BOSTWICK PARK WATER CONSERVANCY DISTRICT SLIDE POINT PIPING 30% PLANS

PLAN AND PROFILE

FILE : 81-20-017_SLIDE_C-20X
JUB PROJ. # : 81-20-017
DRAWN BY: DTF
DESIGN BY: NJE
CHECKED BY: LDG

ONE INCH
AT FULL SIZE, IF NOT ONE INCH, SCALE ACCORDINGLY

LAST UPDATED: 9/18/2023

SHEET NUMBER:

C-201

Plot Date:9/18/2023 4:30 PM Plotted By: Corey Blubaum
Date Created:10/4/2021 \\JUBCENTRAL\CLIENTS\CO\BOSTWICKPARK\PROJECTS\81-20-017_PL-566\PLANE\DESIGN\SLIDEPOINT\CAD\SHEET\81-20-017_SLIDE_C-20X.DWG

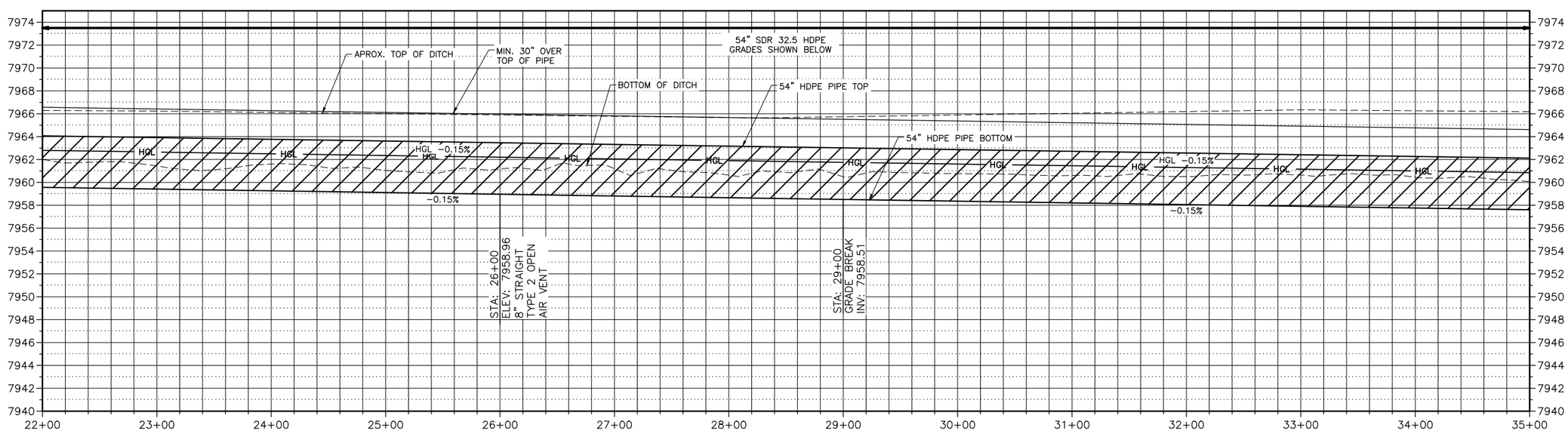

J-U-B ENGINEERS, INC.

J-U-B ENGINEERS, INC.
305 S. Main Street
Unit 6
Palisade, CO 81526
Phone: 970.208.8508
www.jub.com

PRELIMINARY PLANS

NOT FOR CONSTRUCTION

REUSE OF DRAWINGS:
J-U-B SHALL RETAIN ALL COMMON LAW, STATUTORY, COPYRIGHT AND OTHER RESERVED RIGHTS OF THESE DRAWINGS, AND THE SAME SHALL NOT BE REUSED WITHOUT J-U-B'S PRIOR WRITTEN CONSENT. ANY REUSE WITHOUT WRITTEN CONSENT BY J-U-B WILL BE AT CLIENTS SOLE RISK AND WITHOUT LIABILITY OR LEGAL EXPOSURE TO J-U-B.

NO.	DESCRIPTION	BY	APR.	DATE
	REVISION			

BOSTWICK PARK WATER CONSERVANCY DISTRICT
SLIDE POINT PIPING 30% PLANS

PLAN AND PROFILE

FILE : 81-20-017_SLIDE_C-20X
JUB PROJ. # : 81-20-017
DRAWN BY: DTF
DESIGN BY: NJE
CHECKED BY: LDG

ONE INCH
AT FULL SIZE, IF NOT ONE INCH, SCALE ACCORDINGLY

LAST UPDATED: 9/18/2023

SHEET NUMBER:
C-202

Plot Date:9/18/2023 4:30 PM Plotted By: Corey Blubaum
Date Created:10/4/2021 \\JUBCENTRAL\CLIENTS\CO\BOSTWICKPARK\PROJECTS\81-20-017_PL-566\PLANE\DESIGN\SLIDEPOINT\CAD\SHEET\81-20-017_SLIDE_C-20X.DWG

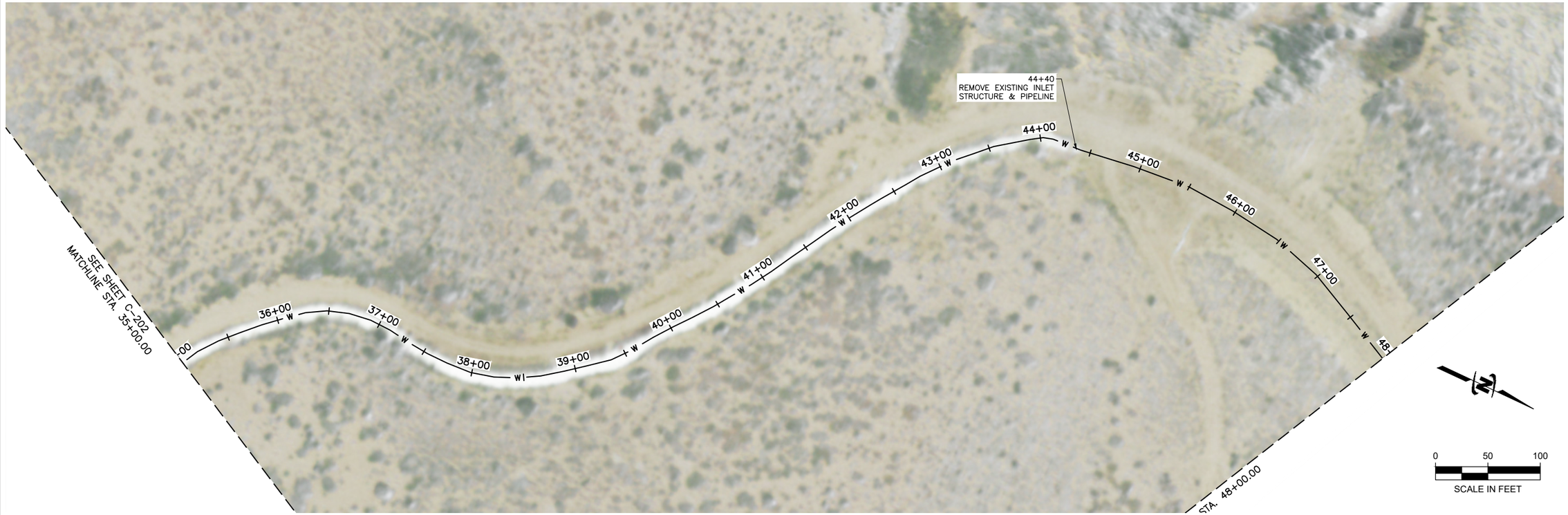

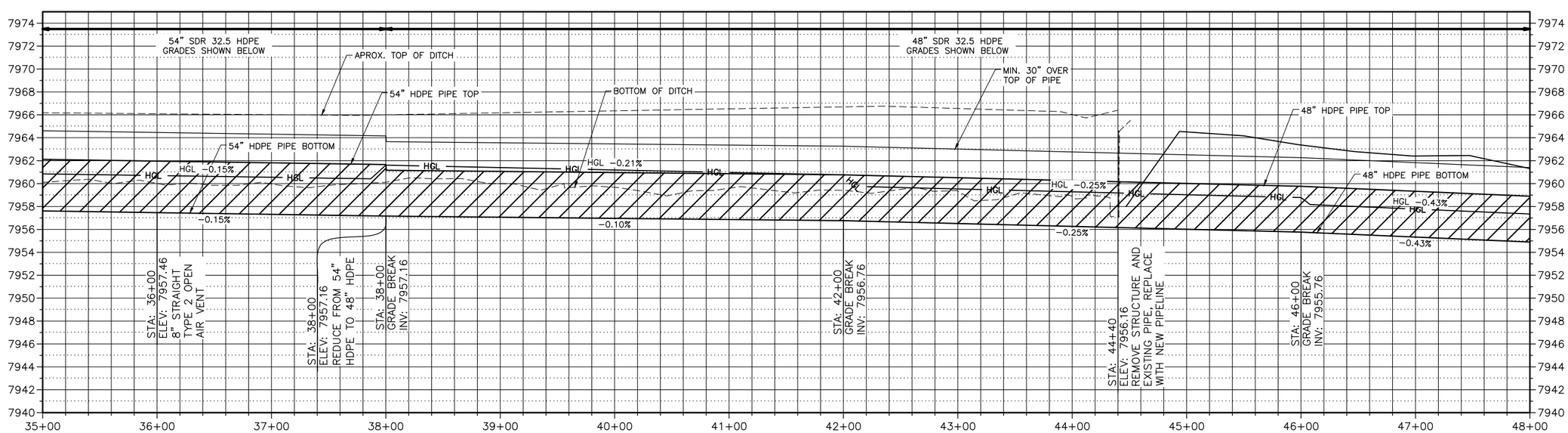

Plot Date:9/18/2023 4:31 PM Plotted By: Corey Blubaum
Date Created:10/4/2021 \\JUBCENTRAL\CLIENTS\CO\BOSTWICKPARK\PROJECTS\81-20-017_PL-566PLANE\DESIGN\SLIDEPOINT\CAD\SHEET\81-20-017_SLIDE_C-20X.DWG

J-U-B ENGINEERS, INC.

J-U-B ENGINEERS, INC.
305 S. Main Street
Unit 6
Palisade, CO 81526
Phone: 970.208.8508
www.jub.com

PRELIMINARY PLANS

NOT FOR CONSTRUCTION

REUSE OF DRAWINGS:
J-U-B SHALL RETAIN ALL COMMON LAW, STATUTORY, COPYRIGHT AND OTHER RESERVED RIGHTS OF THESE DRAWINGS, AND THE SAME SHALL NOT BE REUSED WITHOUT J-U-B'S PRIOR WRITTEN CONSENT. ANY REUSE WITHOUT WRITTEN CONSENT BY J-U-B WILL BE AT CLIENTS SOLE RISK AND WITHOUT LIABILITY OR LEGAL EXPOSURE TO J-U-B.

REVISION			
NO.	DESCRIPTION	BY	APR. DATE

BOSTWICK PARK WATER CONSERVANCY DISTRICT SLIDE POINT PIPING 30% PLANS

PLAN AND PROFILE

FILE: 81-20-017_SLIDE_C-20X
JUB PROJ. #: 81-20-017
DRAWN BY: DTF
DESIGN BY: NJE
CHECKED BY: LDG

ONE INCH
AT FULL SIZE, IF NOT ONE INCH, SCALE ACCORDINGLY

LAST UPDATED: 9/18/2023

SHEET NUMBER:

C-203

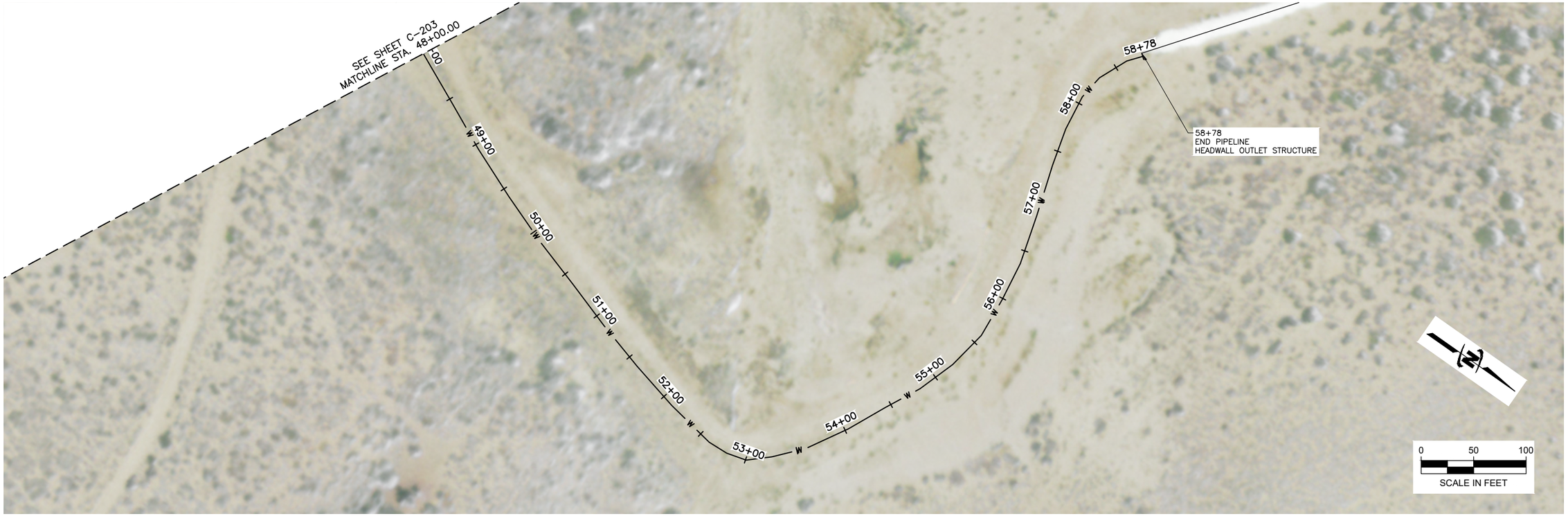

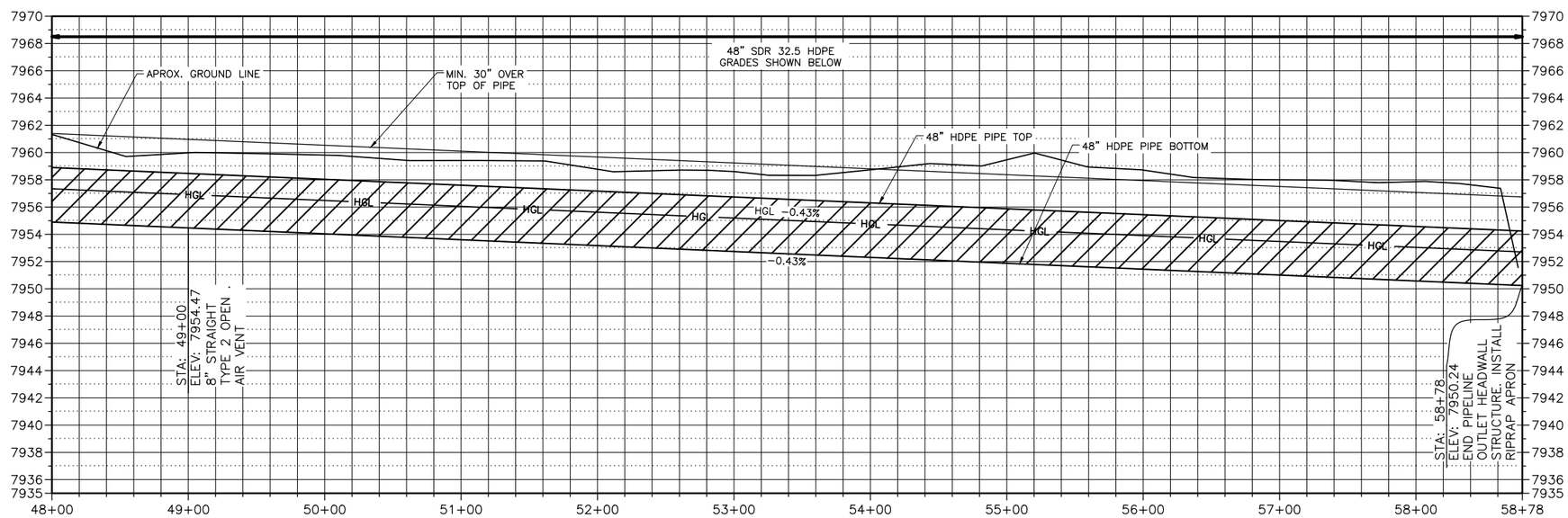

J-U-B ENGINEERS, INC.

J-U-B ENGINEERS, INC.
305 S. Main Street
Unit 6
Palisade, CO 81526
Phone: 970.208.8508
www.jub.com

PRELIMINARY PLANS

NOT FOR CONSTRUCTION

REUSE OF DRAWINGS
J-U-B SHALL RETAIN ALL COMMON LAW, STATUTORY, COPYRIGHT AND OTHER RESERVED RIGHTS OF THESE DRAWINGS, AND THE SAME SHALL NOT BE REUSED WITHOUT J-U-B'S PRIOR WRITTEN CONSENT. ANY REUSE WITHOUT WRITTEN CONSENT BY J-U-B WILL BE AT CLIENTS SOLE RISK AND WITHOUT LIABILITY OR LEGAL EXPOSURE TO J-U-B.

REVISION

NO.	DESCRIPTION	BY	APR.	DATE

BOSTWICK PARK WATER CONSERVANCY DISTRICT
SLIDE POINT PIPING 30% PLANS

PLAN AND PROFILE

FILE: 81-20-017_SLIDE_C-20X
JUB PROJ. #: 81-20-017
DRAWN BY: DTF
DESIGN BY: NJE
CHECKED BY: LDG

ONE INCH
AT FULL SIZE, IF NOT ONE INCH, SCALE ACCORDINGLY

LAST UPDATED: 9/18/2023

SHEET NUMBER:
C-204

Plot Date:9/18/2023 4:31 PM Plotted By: Corey Bluibaum
Date Created:10/4/2021 \\JUBCENTRAL\CLIENTS\CO\BOSTWICKPARK\PROJECTS\81-20-017_PL-566\PLANE\DESIGN\SLIDEPOINT\CAD\SHEET\81-20-017_SLIDE_C-20X.DWG

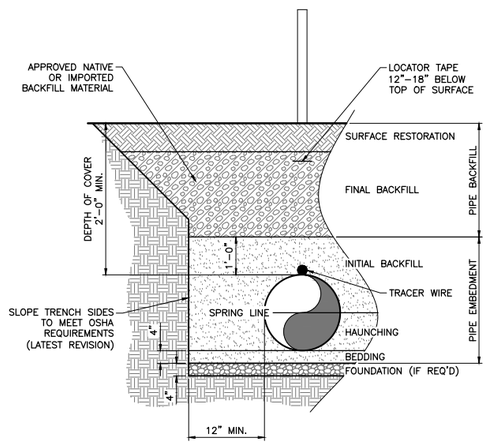

B1 TRENCH EXCAVATION AND BACKFILL
SCALE:N.T.S.

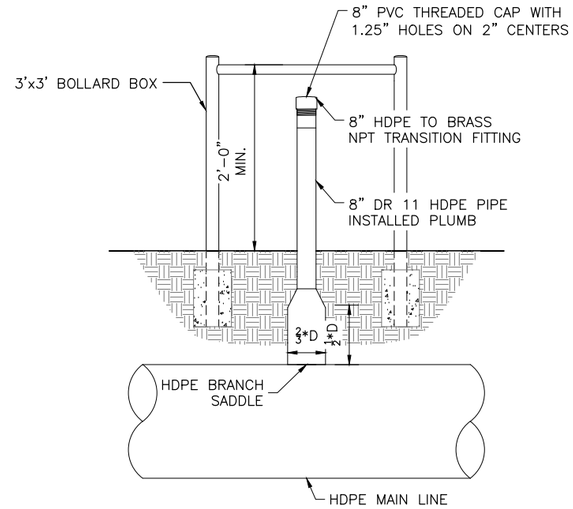

B2 TYPE 1 OPEN AIR VENT
SCALE:N.T.S.

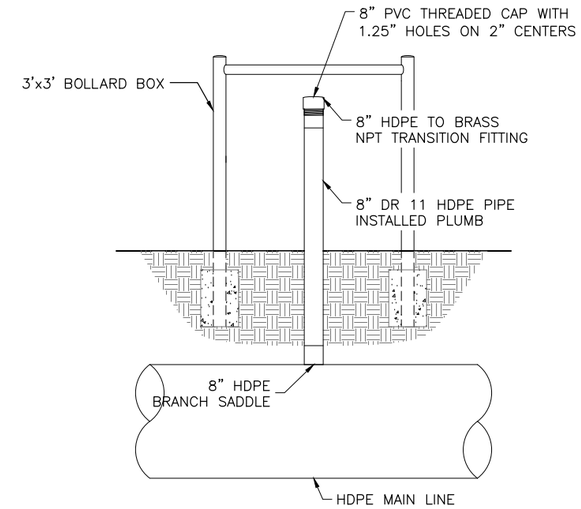

B3 TYPE 2 OPEN AIR VENT
SCALE:N.T.S.

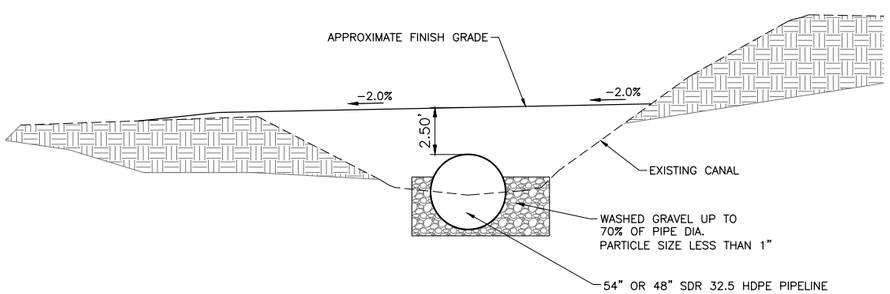

D1 TYPICAL SECTION VIEW
SCALE:N.T.S.

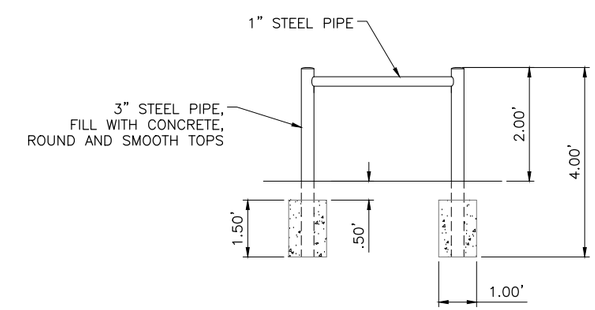

NOTES:
1. BOLLARD BOX TO BE HOT-DIP GALVANIZED AS A SINGLE UNIT PRIOR TO INSTALLATION.
2. TYPICAL FOR OTHER BOLLARD BOX SIZES CALLED OUT IN THE PLANS.

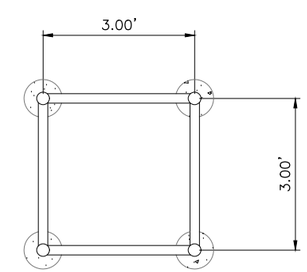

D3 3' BALLARD BOX
SCALE:N.T.S.

J-U-B ENGINEERS, INC.
J-U-B ENGINEERS, INC.
305 S. Main Street
Unit 6
Palisade, CO 81526
Phone: 970.208.8508
www.jub.com

PRELIMINARY PLANS

NOT FOR CONSTRUCTION

REUSE OF DRAWINGS
J-U-B SHALL RETAIN ALL COMMON LAW, STATUTORY, COPYRIGHT AND OTHER RESERVED RIGHTS OF THESE DRAWINGS, AND THE SAME SHALL NOT BE REUSED WITHOUT J-U-B'S PRIOR WRITTEN CONSENT. ANY REUSE WITHOUT WRITTEN CONSENT BY J-U-B WILL BE AT CLIENTS SOLE RISK AND WITHOUT LIABILITY OR LEGAL EXPOSURE TO J-U-B.

NO.	DESCRIPTION	BY	APR.	DATE

REVISION

BOSTWICK PARK WATER CONSERVANCY DISTRICT
SLIDE POINT PIPING 30% PLANS

DETAILS

FILE : 81-20-017_SLIDE_C-50X
JUB PROJ. # : 81-20-017
DRAWN BY: DTF
DESIGN BY: NJE
CHECKED BY: LDG
ONE INCH
AT FULL SIZE, IF NOT ONE INCH, SCALE ACCORDINGLY
LAST UPDATED: 9/18/2023

SHEET NUMBER:
C-501

Plot Date:9/18/2023 4:31 PM Plotted By: Corey Blubaum
Date Created:7/1/2021 \\JUB\CENTRAL\CLIENTS\CO\BOSTWICKPARK\PROJECTS\81-20-017_PL-566\PLANE\DESIGN\SLIDEPOINT\CAD\SHEET\81-20-017_SLIDE_C-50X.DWG

BOSTWICK PARK WATER CONSERVANCY DISTRICT

EAST LATERAL PIPING
30% PLANS

SEPTEMBER 2023

PRELIMINARY NOT FOR CONSTRUCTION

Sheet List Table	
Sheet Number	Sheet Title
G-001	COVER
C-001	SHEET INDEX
C-201	PLAN AND PROFILE
C-202	PLAN AND PROFILE
C-203	PLAN AND PROFILE
C-204	PLAN AND PROFILE
C-205	PLAN AND PROFILE
C-206	PLAN AND PROFILE
C-207	PLAN AND PROFILE
C-208	PLAN AND PROFILE
C-209	PLAN AND PROFILE
C-501	DETAILS
C-502	DETAILS
C-503	DETAILS
C-504	DETAILS

PROJECT NO. 81-20-017

J-U-B ENGINEERS, INC.

305 S. Main Street, Suite 6, Palisade, CO 81526
p 970 208 8508 *w* www.jub.com

OTHER J-U-B COMPANIES THE LANGDON GROUP GATEWAY MAPPING INC.

NOTICE AND DISCLAIMER

THE PLANS AND/OR SPECIFICATIONS (DOCUMENTS) ARE THE PROPERTY OF J–U–B ENGINEERS, INC. ("J–U–B") AND BY USING THE DOCUMENTS YOU AGREE TO BE BOUND BY THE TERMS AND CONDITIONS IN THIS NOTICE AND DISCLAIMER.

THE USE OF THE DOCUMENTS CREATES NO DUTY IN CONTRACT, TORT, EQUITY OR OTHERWISE OF J–U–B TO THE USER. THE USER SHALL NOT (I) DISSEMINATE THE DOCUMENTS, OR ANY PART THEREOF, TO OTHERS WITHOUT THE WRITTEN CONSENT OF J–U–B, OR (II) USE THE DOCUMENTS, OR ANY PART THEREOF, FOR ANY USE OTHER THAN AS DESIGNATED HEREIN FOR THE INTENDED PROJECT. THE DOCUMENTS ARE NOT INTENDED FOR USE IN CREATING DTM FOR GRADING OR EARTHWORK, SURVEY STAKING LAYOUT (UNLESS SPECIFICALLY IDENTIFIED AS SUCH IN THE DOCUMENTS), OR PROPERTY BOUNDARY LAYOUTS.

J–U–B AND ITS AGENTS SHALL NOT BE LIABLE FOR ANY DAMAGES OR CLAIMS ARISING OUT OF THE UNAUTHORIZED USE OR MISUSE OF THE DOCUMENTS , OR ANY PART THEREOF, WHETHER SUCH DAMAGE OR CLAIM IS BASED IN CONTRACT, TORT OR OTHERWISE. THE USER HEREBY RELEASES AND SHALL DEFEND, INDEMNIFY AND HOLD J–U–B AND ITS AGENTS HARMLESS FROM ANY DAMAGES OR CLAIMS ARISING OUT OF, OR RELATED IN ANY WAY TO, THE USER'S UNAUTHORIZED USE OR MISUSE OF THE DOCUMENTS, OR ANY PART THEREOF.

IF THE DOCUMENTS ARE PROVIDED IN ELECTRONIC FORMAT, THE ELECTRONIC DOCUMENTS ARE SUBJECT TO THE PROVISIONS OF J–U–B's "ELECTRONIC DOCUMENT/DATA LIMITED LICENSE" FOUND AT EDOCS.JUB.COM.

LAST UPDATED: 9/18/2023

SHEET NUMBER:

G-001

Plot Date:9/18/2023 \\JUB\CENTRAL\CLIENTS\CO\BOSTWICKPARK\PROJECTS\81-20-017_PL-566PLANE\DESIGN\EASTLATERAL\CAD\SHEET\GENERAL\EASTLAT_COVER.DWG

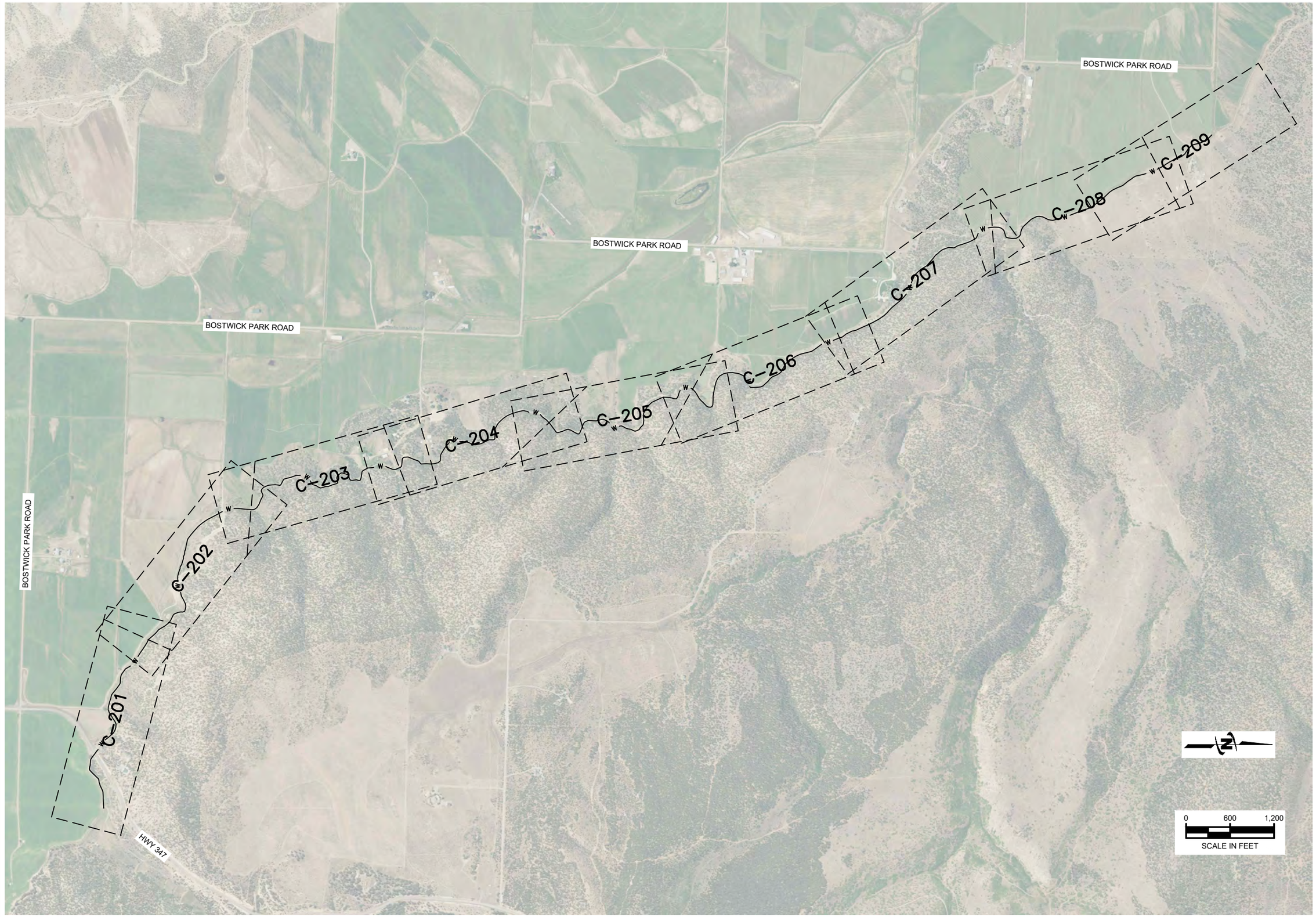

Plot Date:9/18/2023 1:43 PM Plotted By: Corey Blabaum
Date Created:9/23/2020 \\JUB\CENTRAL\CLIENTS\CO\BOSTWICKPARK\PROJECTS\81-20-017_PL-566PLANEA\DESIGN\EASTLATERAL\CAD\SHEET\CIVIL\81-17-028_C-001_KEY_EASTLAT.DWG

J-U-B ENGINEERS, INC.

J-U-B ENGINEERS, INC.
305 Main Street
Palisade, CO 81526
Phone: 970.208.8508
www.jub.com

PRELIMINARY PLANS

NOT FOR CONSTRUCTION

REUSE OF DRAWINGS
J-U-B SHALL RETAIN ALL COMMON LAW, STATUTORY, COPYRIGHT AND OTHER RESERVED RIGHTS OF THESE DRAWINGS, AND THE SAME SHALL NOT BE REUSED WITHOUT J-U-B'S PRIOR WRITTEN CONSENT. ANY REUSE WITHOUT WRITTEN CONSENT BY J-U-B WILL BE AT CLIENT'S SOLE RISK AND WITHOUT LIABILITY OR LEGAL EXPOSURE TO J-U-B.

REVISION

NO.	DESCRIPTION	BY	APR.	DATE

BOSTWICK WATER CONSERVANCY DISTRICT
EAST LATERAL PIPING PROJECT

SHEET INDEX

FILE : 81-17-028_C-001_KEY_EASTLAT
JUB PROJ. # : 81-17-028
DRAWN BY:
DESIGN BY: NJE
CHECKED BY: LDG
ONE INCH
AT FULL SIZE, IF NOT ONE INCH, SCALE ACCORDINGLY
LAST UPDATED: 5/19/2021

SHEET NUMBER:
C-5 C-001

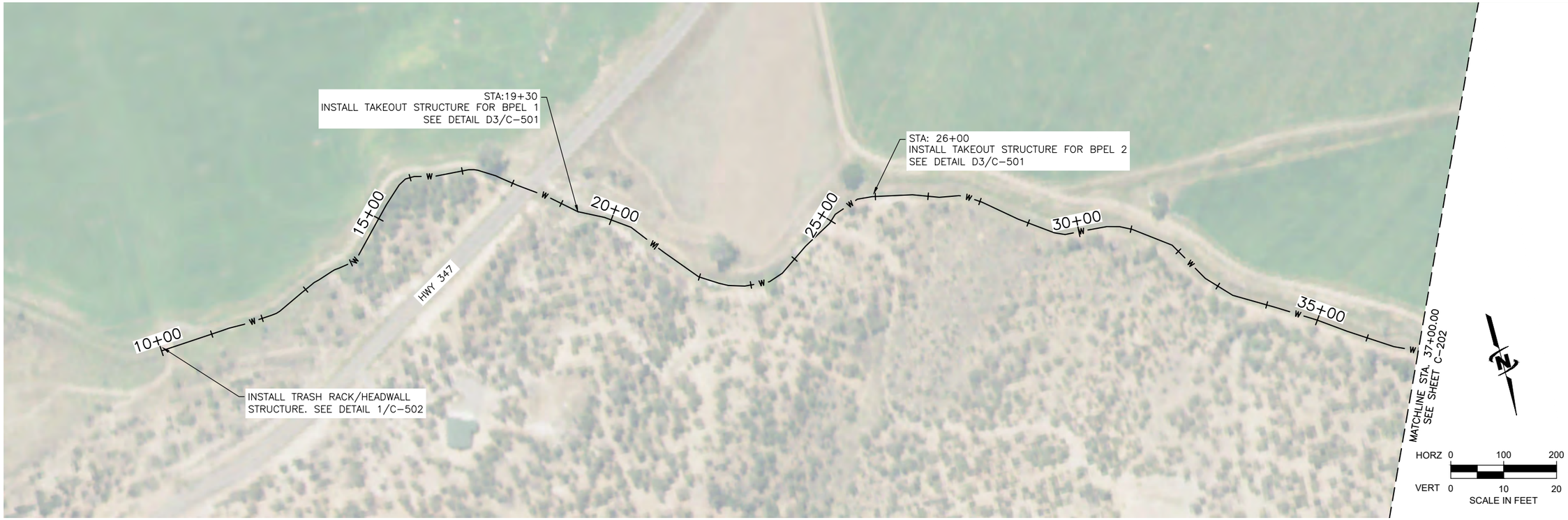

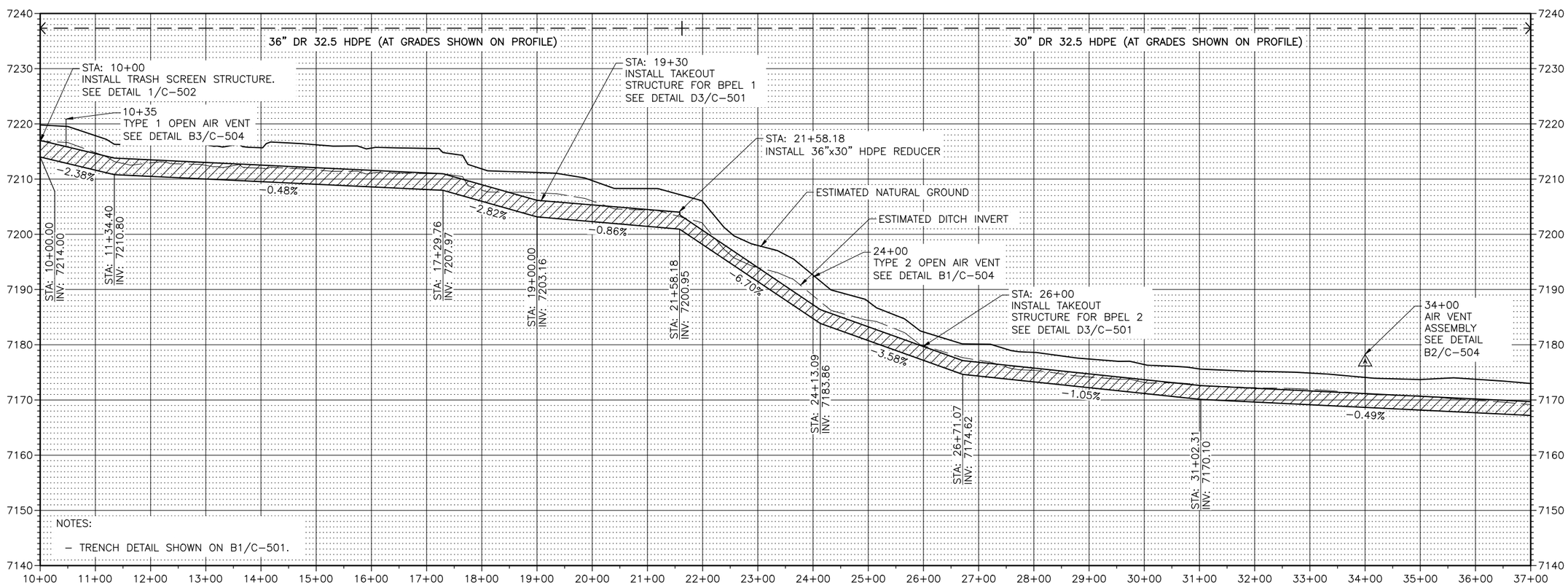

NOTES:

– TRENCH DETAIL SHOWN ON B1/C-501.

J-U-B ENGINEERS, INC.

J-U-B ENGINEERS, INC.
305 Main Street
Palisade, CO 81526
Phone: 970.208.8508
www.jub.com

PRELIMINARY PLANS

NOT FOR CONSTRUCTION

REUSE OF DRAWINGS
J-U-B SHALL RETAIN ALL COMMON LAW, STATUTORY, COPYRIGHT AND OTHER RESERVED RIGHTS OF THESE DRAWINGS, AND THE SAME SHALL NOT BE REUSED WITHOUT J-U-B'S PRIOR WRITTEN CONSENT. ANY REUSE WITHOUT WRITTEN CONSENT BY J-U-B WILL BE AT CLIENTS SOLE RISK AND WITHOUT LIABILITY OR LEGAL EXPOSURE TO J-U-B.

NO.	DESCRIPTION	BY	APR.	DATE

REVISION

BOSTWICK WATER CONSERVANCY DISTRICT EAST LATERAL PIPING PROJECT

PLAN AND PROFILE

FILE : 81-17-028_C-201X_EASTLAT2
JUB PROJ. # : 81-17-028
DRAWN BY: JMM/NJE
DESIGN BY: NJE
CHECKED BY: LDG
ONE INCH
AT FULL SIZE, IF NOT ONE INCH, SCALE ACCORDINGLY
LAST UPDATED: 9/18/2023

SHEET NUMBER:
C-201

Plot Date:9/18/2023 1:43 PM Plotted By: Corey Blubaum
Date Created:5/19/2021 \\JUB\CENTRAL\CLIENTS\CO\BOSTWICKPARK\PROJECTS\81-20-017_PL-566PLANE\DESIGN\EASTLATERAL\CAD\SHEET\CIVIL\81-17-028_C-201X_EASTLAT2.DWG

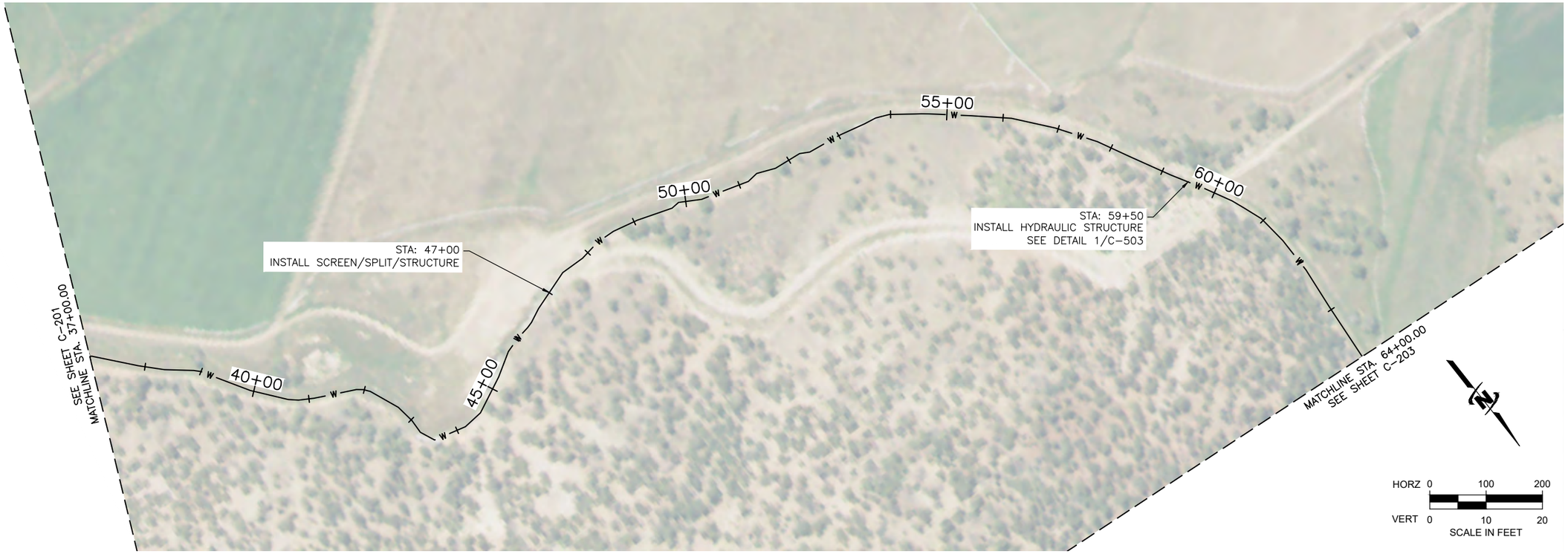

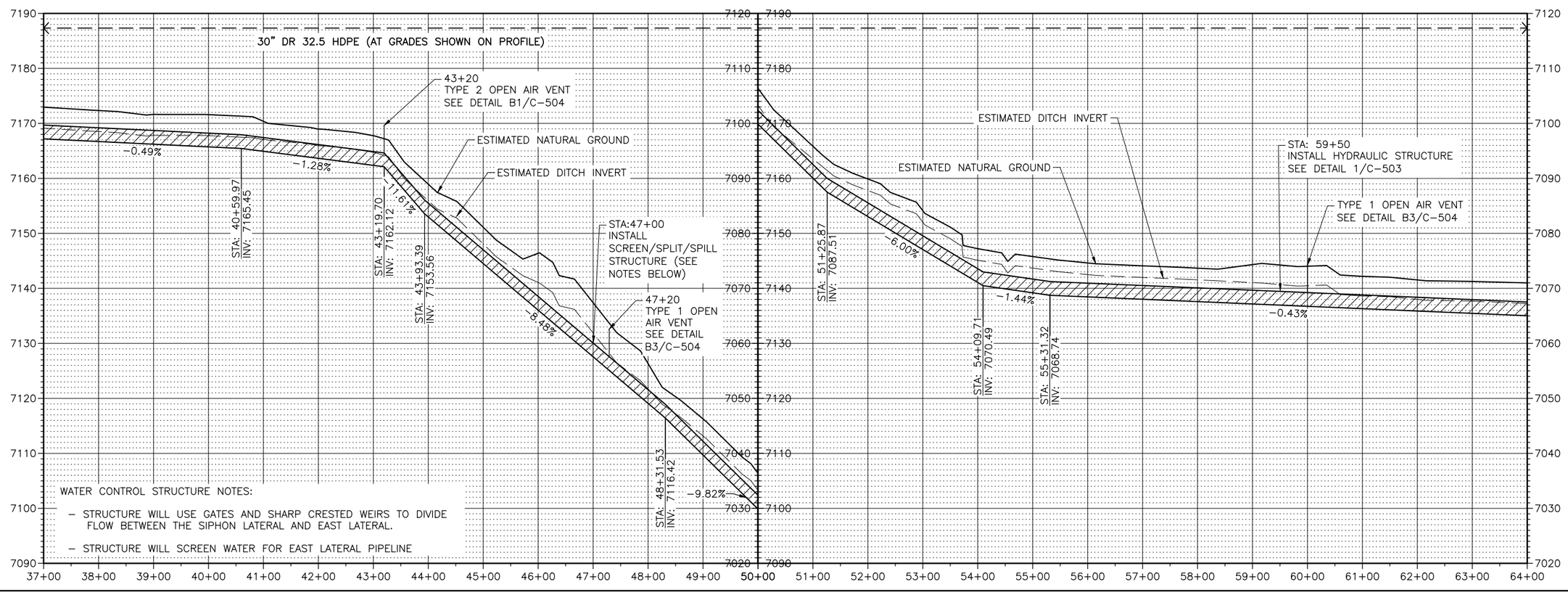

WATER CONTROL STRUCTURE NOTES:

- STRUCTURE WILL USE GATES AND SHARP CRESTED WEIRS TO DIVIDE FLOW BETWEEN THE SIPHON LATERAL AND EAST LATERAL.
- STRUCTURE WILL SCREEN WATER FOR EAST LATERAL PIPELINE

Plot Date:9/18/2023 1:43 PM Plotted By: Corey Blubaum
Date Created:5/19/2021 \\JUB\CENTRAL\CLIENTS\CO\BOSTWICKPARK\PROJECTS\81-20-017_PL-566\PLANE\DESIGN\EASTLATERAL\CAD\SHEET\CIVIL\81-17-028_C-201X_EASTLAT2.DWG

J-U-B ENGINEERS, INC.

J-U-B ENGINEERS, INC.
305 Main Street
Palisade, CO 81526
Phone: 970.208.8508
www.jub.com

PRELIMINARY PLANS

NOT FOR CONSTRUCTION

REUSE OF DRAWINGS
J-U-B SHALL RETAIN ALL COMMON LAW, STATUTORY, COPYRIGHT AND OTHER RESERVED RIGHTS OF THESE DRAWINGS, AND THE SAME SHALL NOT BE REUSED WITHOUT J-U-B'S PRIOR WRITTEN CONSENT. ANY REUSE WITHOUT WRITTEN CONSENT BY J-U-B WILL BE AT CLIENTS SOLE RISK AND WITHOUT LIABILITY OR LEGAL EXPOSURE TO J-U-B.

NO.	REVISION	BY	APR.	DATE

NO.	DESCRIPTION

BOSTWICK WATER CONSERVANCY DISTRICT
EAST LATERAL PIPING PROJECT

PLAN AND PROFILE

FILE : 81-17-028_C-201X_EASTLAT2
JUB PROJ. # : 81-17-028
DRAWN BY: JMM/NJE
DESIGN BY: NJE
CHECKED BY: LDG
ONE INCH
AT FULL SIZE, IF NOT ONE INCH, SCALE ACCORDINGLY
LAST UPDATED: 9/18/2023

SHEET NUMBER:

C-202

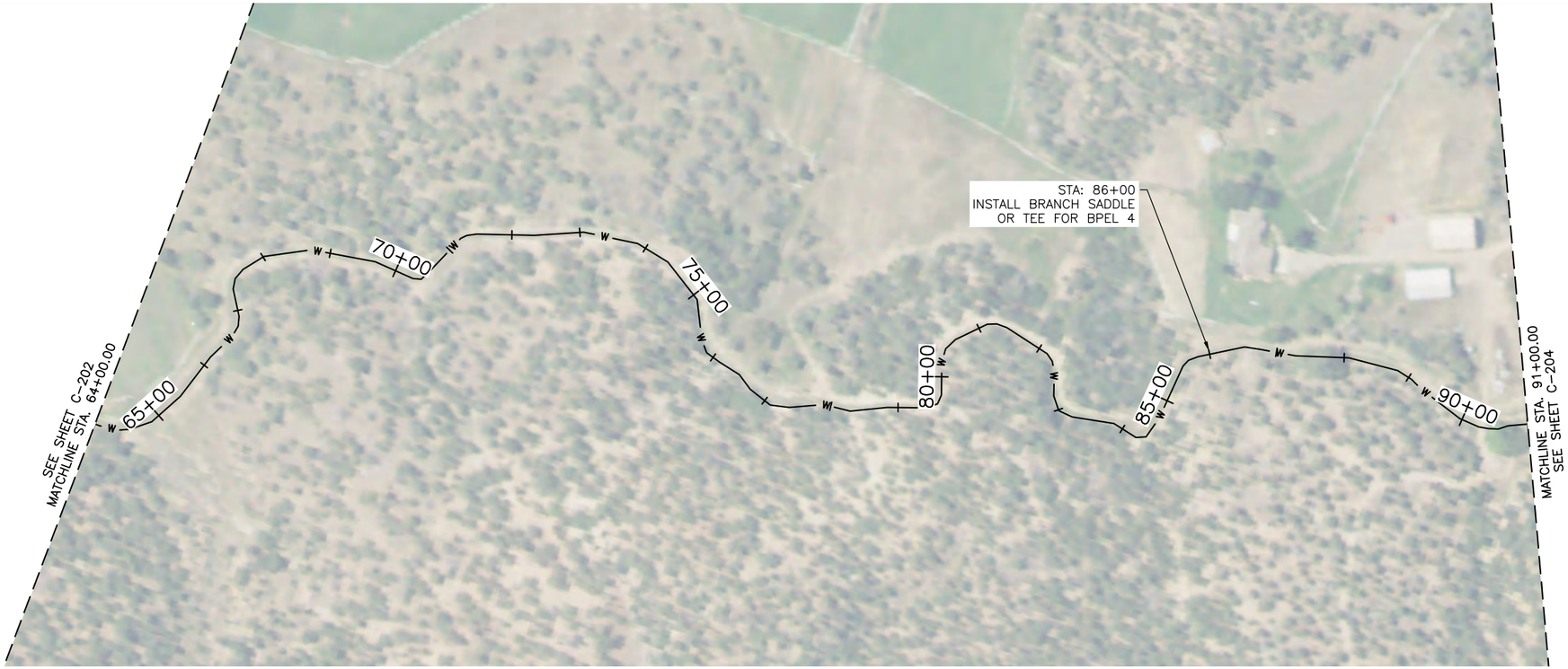

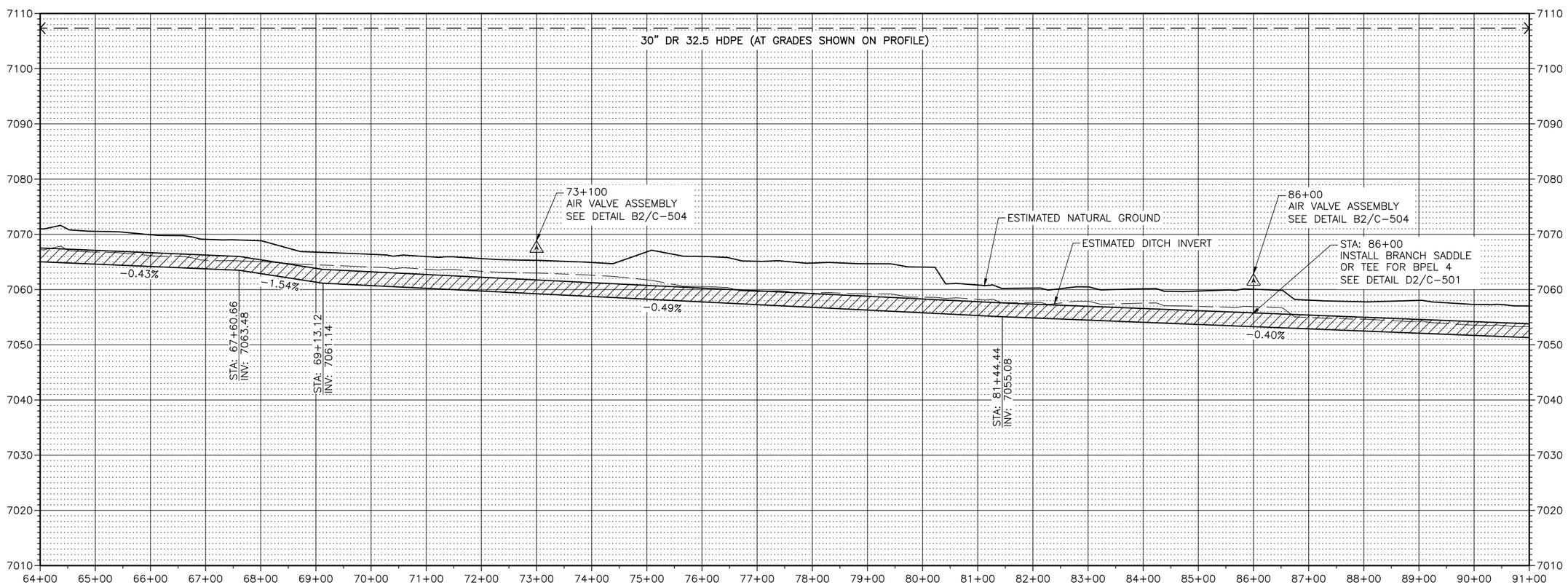

Plot Date:9/18/2023 1:43 PM Plotted By: Corey Blubaum
Date Created:5/19/2021 \\JUB\CENTRAL\CLIENTS\CO\BOSTWICKPARK\PROJECTS\81-20-017_PL-566PLANEA\DESIGNE\EASTLATERAL\CAD\SHEET\CIVIL\81-17-028_C-201X_EASTLAT2.DWG

J-U-B ENGINEERS, INC.

J-U-B ENGINEERS, INC.
305 Main Street
Palisade, CO 81526
Phone: 970.208.8508
www.jub.com

PRELIMINARY PLANS

NOT FOR CONSTRUCTION

REUSE OF DRAWINGS
J-U-B SHALL RETAIN ALL COMMON LAW, STATUTORY, COPYRIGHT AND OTHER RESERVED RIGHTS OF THESE DRAWINGS, AND THE SAME SHALL NOT BE REUSED WITHOUT J-U-B'S PRIOR WRITTEN CONSENT. ANY REUSE WITHOUT WRITTEN CONSENT BY J-U-B WILL BE AT CLIENTS SOLE RISK AND WITHOUT LIABILITY OR LEGAL EXPOSURE TO J-U-B.

NO.	DESCRIPTION	BY	APR.	DATE
	REVISION			

BOSTWICK WATER CONSERVANCY DISTRICT
EAST LATERAL PIPING PROJECT

PLAN AND PROFILE

FILE : 81-17-028_C-201X_EASTLAT2
JUB PROJ. # : 81-17-028
DRAWN BY: JMM/NJE
DESIGN BY: NJE
CHECKED BY: LDG
ONE INCH
AT FULL SIZE, IF NOT ONE INCH, SCALE ACCORDINGLY
LAST UPDATED: 9/18/2023

SHEET NUMBER:
C-203

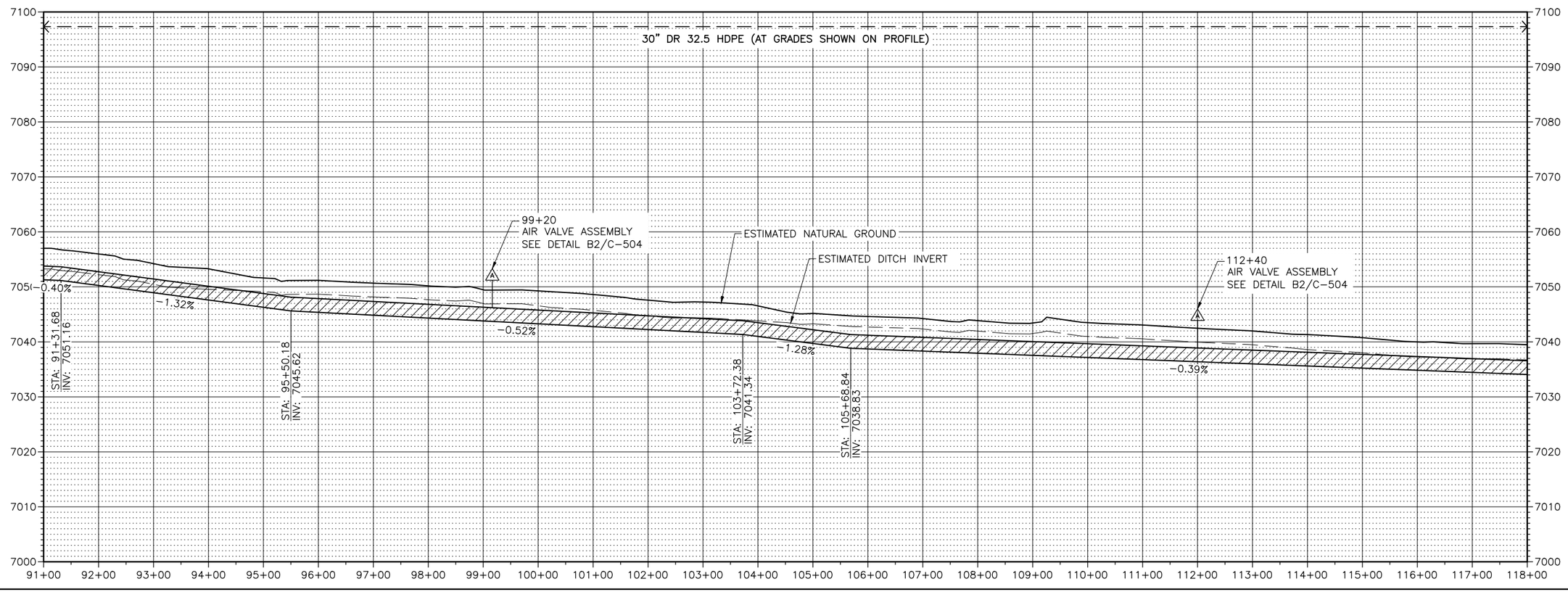

J-U-B ENGINEERS, INC.

J-U-B ENGINEERS, INC.
305 Main Street
Palisade, CO 81526
Phone: 970.208.8508
www.jub.com

PRELIMINARY PLANS

NOT FOR CONSTRUCTION

REUSE OF DRAWINGS
J-U-B SHALL RETAIN ALL COMMON LAW, STATUTORY, COPYRIGHT AND OTHER RESERVED RIGHTS OF THESE DRAWINGS, AND THE SAME SHALL NOT BE REUSED WITHOUT J-U-B'S PRIOR WRITTEN CONSENT. ANY REUSE WITHOUT WRITTEN CONSENT BY J-U-B WILL BE AT CLIENT'S SOLE RISK AND WITHOUT LIABILITY OR LEGAL EXPOSURE TO J-U-B.

NO.	REVISION	BY	APR.	DATE

NO.	DESCRIPTION

BOSTWICK WATER CONSERVANCY DISTRICT
EAST LATERAL PIPING PROJECT

PLAN AND PROFILE

FILE : 81-17-028_C-201X_EASTLAT2
JUB PROJ. # : 81-17-028
DRAWN BY: JMM/NJE
DESIGN BY: NJE
CHECKED BY: LDG
ONE INCH
AT FULL SIZE, IF NOT ONE INCH, SCALE ACCORDINGLY
LAST UPDATED: 9/18/2023

SHEET NUMBER:
C-204

Plot Date:9/18/2023 1:44 PM Plotted By: Corey Blubaum
Date Created:5/19/2021 \\JUB\CENTRAL\CLIENTS\CO\BOSTWICKPARK\PROJECTS\81-20-017_PL-566\PLANE\DESIGN\EASTLATERAL\CAD\SHEET\CIVIL\81-17-028_C-201X_EASTLAT2.DWG

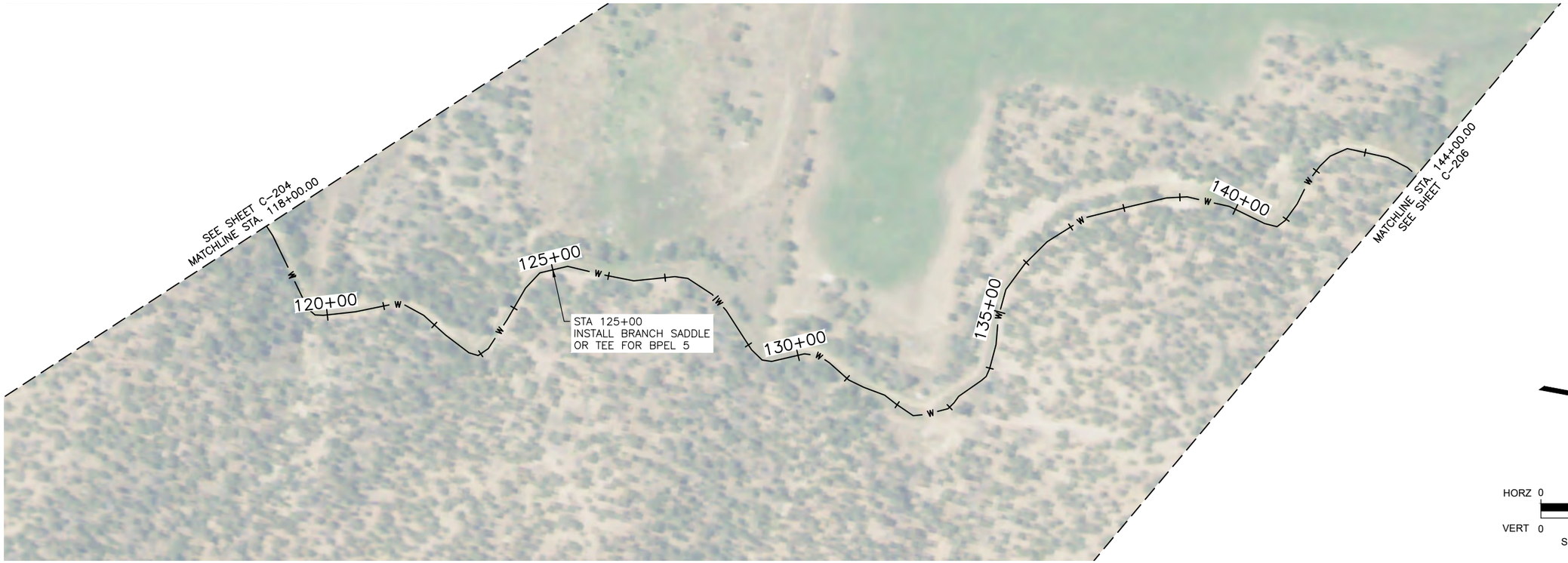

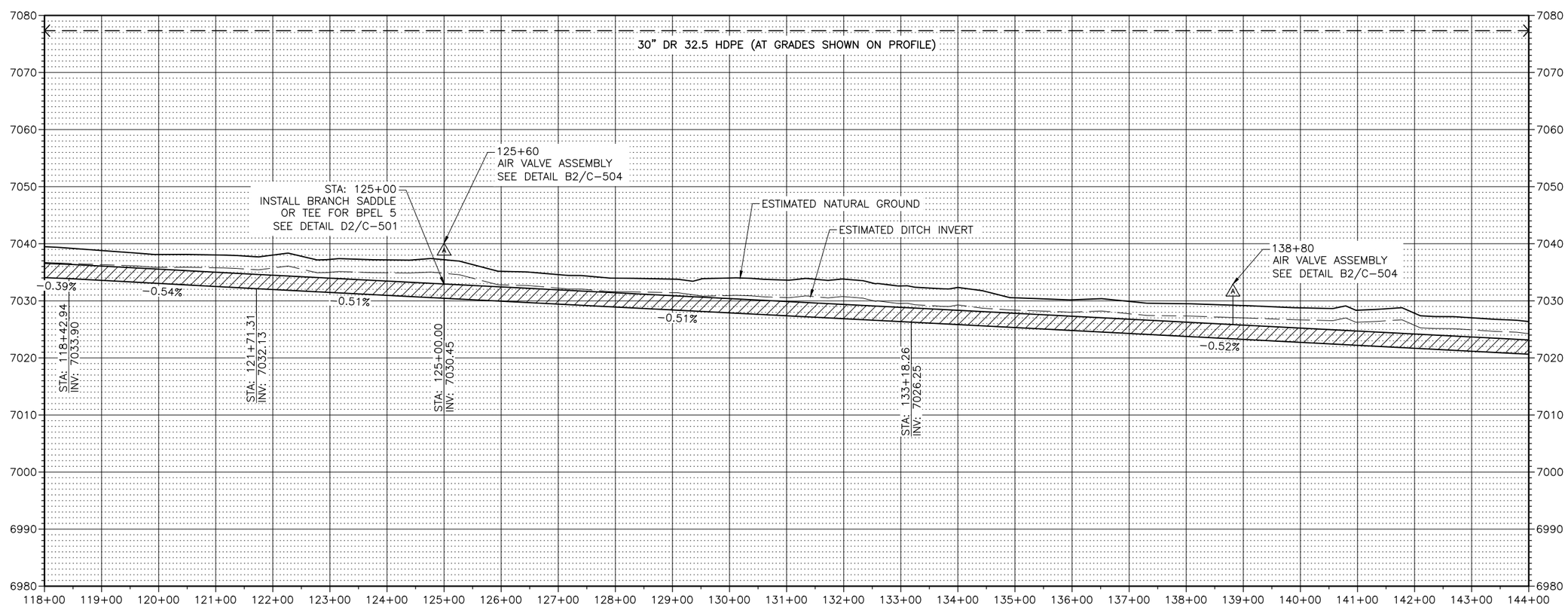

J-U-B ENGINEERS, INC.

J-U-B ENGINEERS, INC.
305 Main Street
Palisade, CO 81526
Phone: 970.208.8508
www.jub.com

PRELIMINARY PLANS

NOT FOR CONSTRUCTION

REUSE OF DRAWINGS
J-U-B SHALL RETAIN ALL COMMON LAW, STATUTORY, COPYRIGHT AND OTHER RESERVED RIGHTS OF THESE DRAWINGS, AND THE SAME SHALL NOT BE REUSED WITHOUT J-U-B'S PRIOR WRITTEN CONSENT. ANY REUSE WITHOUT WRITTEN CONSENT BY J-U-B WILL BE AT CLIENTS SOLE RISK AND WITHOUT LIABILITY OR LEGAL EXPOSURE TO J-U-B.

NO.	DESCRIPTION	BY	APR.	DATE

REVISION

BOSTWICK WATER CONSERVANCY DISTRICT
EAST LATERAL PIPING PROJECT

PLAN AND PROFILE

FILE : 81-17-028_C-201X_EASTLAT2
JUB PROJ. # : 81-17-028
DRAWN BY: JMM/NJE
DESIGN BY: NJE
CHECKED BY: LDG
ONE INCH
AT FULL SIZE, IF NOT ONE INCH, SCALE ACCORDINGLY
LAST UPDATED: 9/18/2023

SHEET NUMBER:
C-205

Plot Date:9/18/2023 1:44 PM Plotted By: Corey Blubaum
Date Created:5/19/2021 \\JUB\CENTRAL\CLIENTS\CO\BOSTWICKPARK\PROJECTS\81-20-017_PL-566PLANE\DESIGNE\EASTLATERAL\CAD\SHEET\CIVIL\81-17-028_C-201X_EASTLAT2.DWG

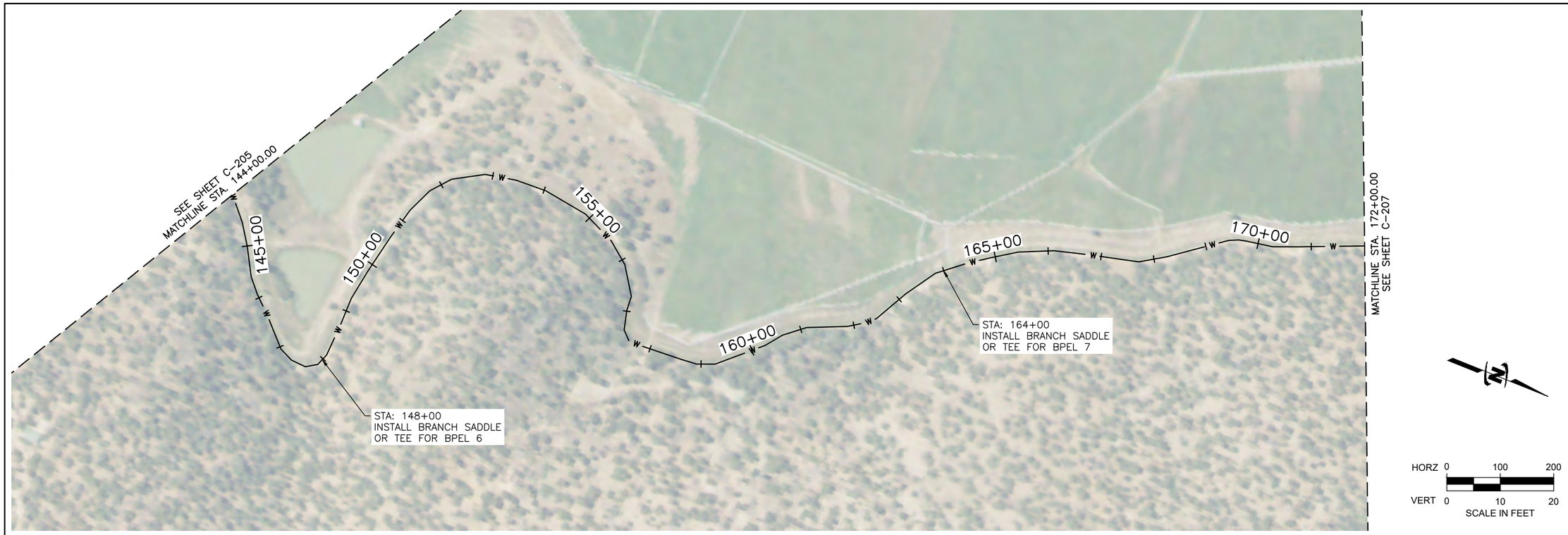

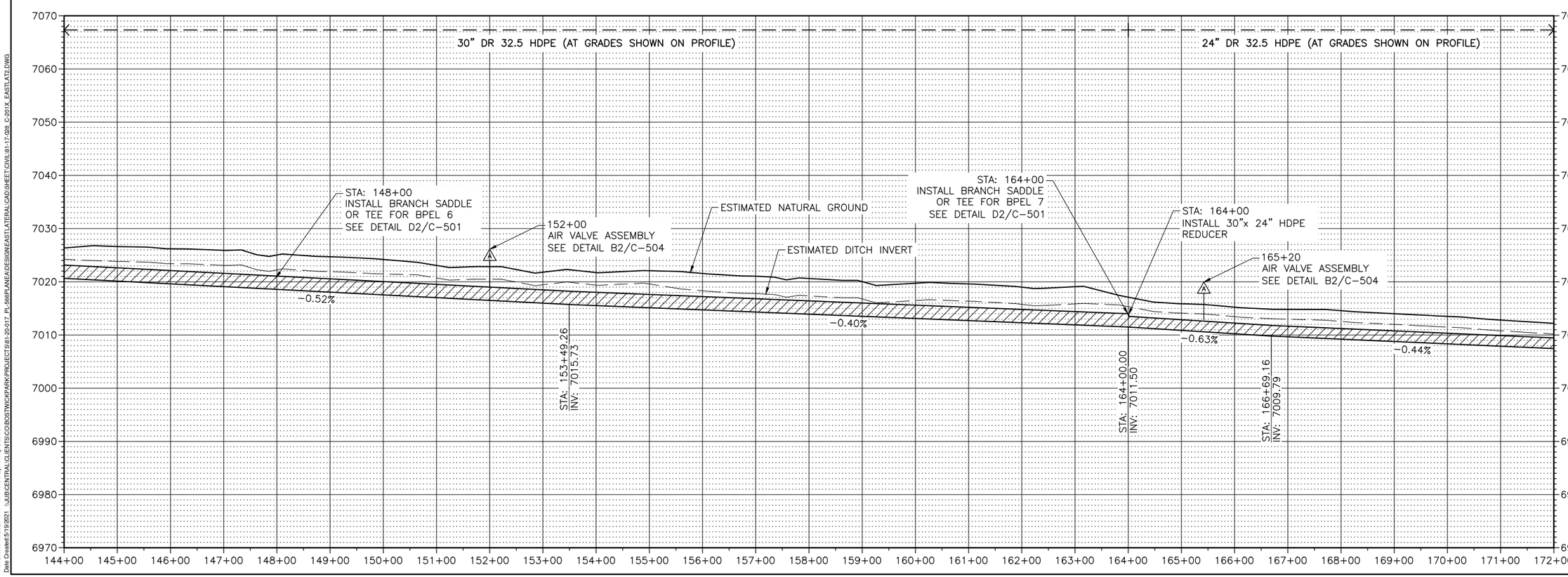

J-U-B ENGINEERS, INC.

J-U-B ENGINEERS, INC.
305 Main Street
Palisade, CO 81526
Phone: 970.208.8508
www.jub.com

PRELIMINARY PLANS

NOT FOR CONSTRUCTION

REUSE OF DRAWINGS
J-U-B SHALL RETAIN ALL COMMON LAW, STATUTORY, COPYRIGHT AND OTHER RESERVED RIGHTS OF THESE DRAWINGS, AND THE SAME SHALL NOT BE REUSED WITHOUT J-U-B'S PRIOR WRITTEN CONSENT. ANY REUSE WITHOUT WRITTEN CONSENT BY J-U-B WILL BE AT CLIENTS SOLE RISK AND WITHOUT LIABILITY OR LEGAL EXPOSURE TO J-U-B.

NO.	DESCRIPTION	BY	APR.	DATE

REVISION

BOSTWICK WATER CONSERVANCY DISTRICT
EAST LATERAL PIPING PROJECT

PLAN AND PROFILE

FILE : 81-17-028_C-201X_EASTLAT2
JUB PROJ. # : 81-17-028
DRAWN BY: JMM/NJE
DESIGN BY: NJE
CHECKED BY: LDG
ONE INCH
AT FULL SIZE, IF NOT ONE INCH, SCALE ACCORDINGLY
LAST UPDATED: 9/18/2023

SHEET NUMBER:
C-206

Plot Date:9/18/2023 1:44 PM Plotted By: Corey Blabaum
Date Created:5/19/2021 \\JUB\CENTRAL\CLIENTS\CO\BOSTWICKPARK\PROJECTS\81-20-017_PL-566PLANE\DESIGN\EASTLATERAL\CAD\SHEET\CIVIL\81-17-028_C-201X_EASTLAT2.DWG

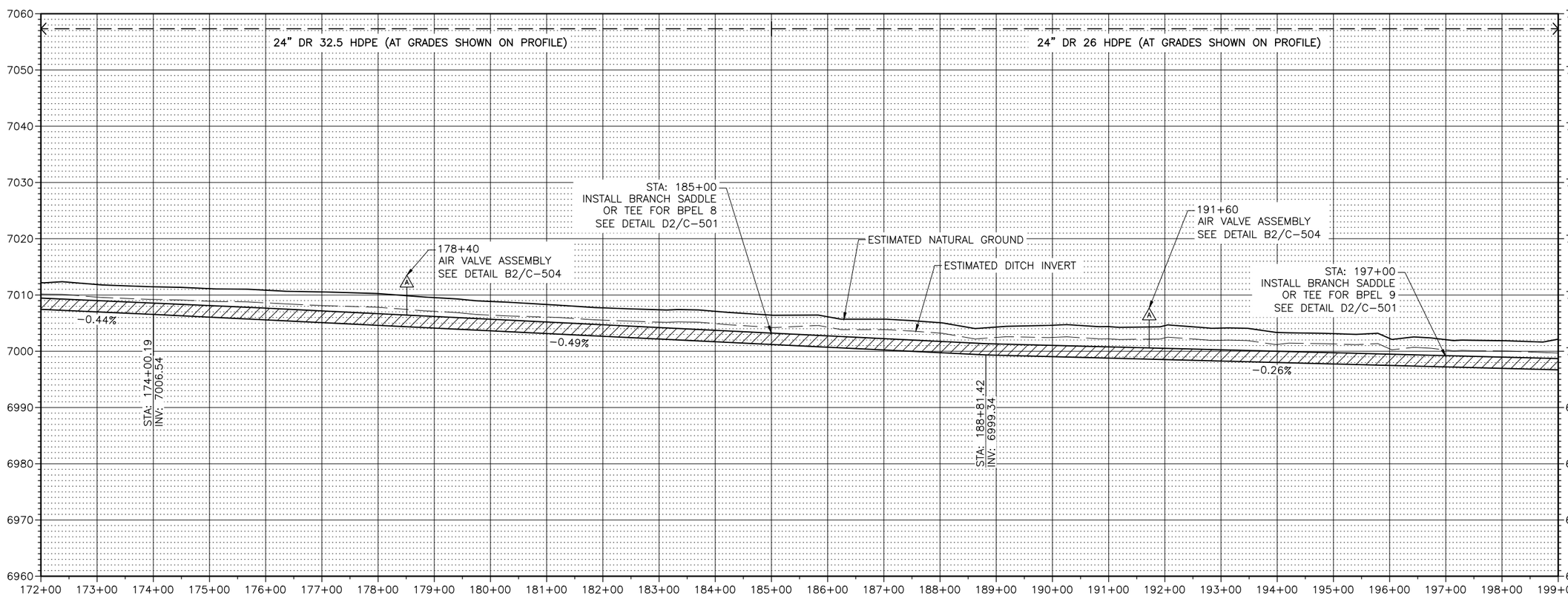

J-U-B ENGINEERS, INC.

J-U-B ENGINEERS, INC.
305 Main Street
Palisade, CO 81526
Phone: 970.208.8508
www.jub.com

PRELIMINARY PLANS

NOT FOR CONSTRUCTION

REUSE OF DRAWINGS

J-U-B SHALL RETAIN ALL COPYRIGHT, OWNERSHIP, AND OTHER RESERVED RIGHTS OF THESE DRAWINGS, AND THE SAME SHALL NOT BE REUSED WITHOUT J-U-B'S PRIOR WRITTEN CONSENT. ANY REUSE WITHOUT WRITTEN CONSENT BY J-U-B WILL BE AT CLIENTS SOLE RISK AND WITHOUT LIABILITY OR LEGAL EXPOSURE TO J-U-B.

NO.	DESCRIPTION	BY	APR.	DATE
	REVISION			

BOSTWICK WATER CONSERVANCY DISTRICT
EAST LATERAL PIPING PROJECT

PLAN AND PROFILE

FILE : 81-17-028_C-201X_EASTLAT2
JUB PROJ. # : 81-17-028
DRAWN BY: JMM/NJE
DESIGN BY: NJE
CHECKED BY: LDG
ONE INCH
AT FULL SIZE, IF NOT ONE INCH, SCALE ACCORDINGLY
LAST UPDATED: 9/18/2023

SHEET NUMBER:
C-207

Plot Date:9/18/2023 1:44 PM Plotted By: Corey Blubaum
Date Created:5/19/2021 \\JUB\CENTRAL\CLIENTS\CO\BOSTWICKPARK\PROJECTS\81-20-017_PL-566PLANE\DESIGN\EASTLATERAL\CAD\SHEET\CIVIL\81-17-028_C-201X_EASTLAT2.DWG

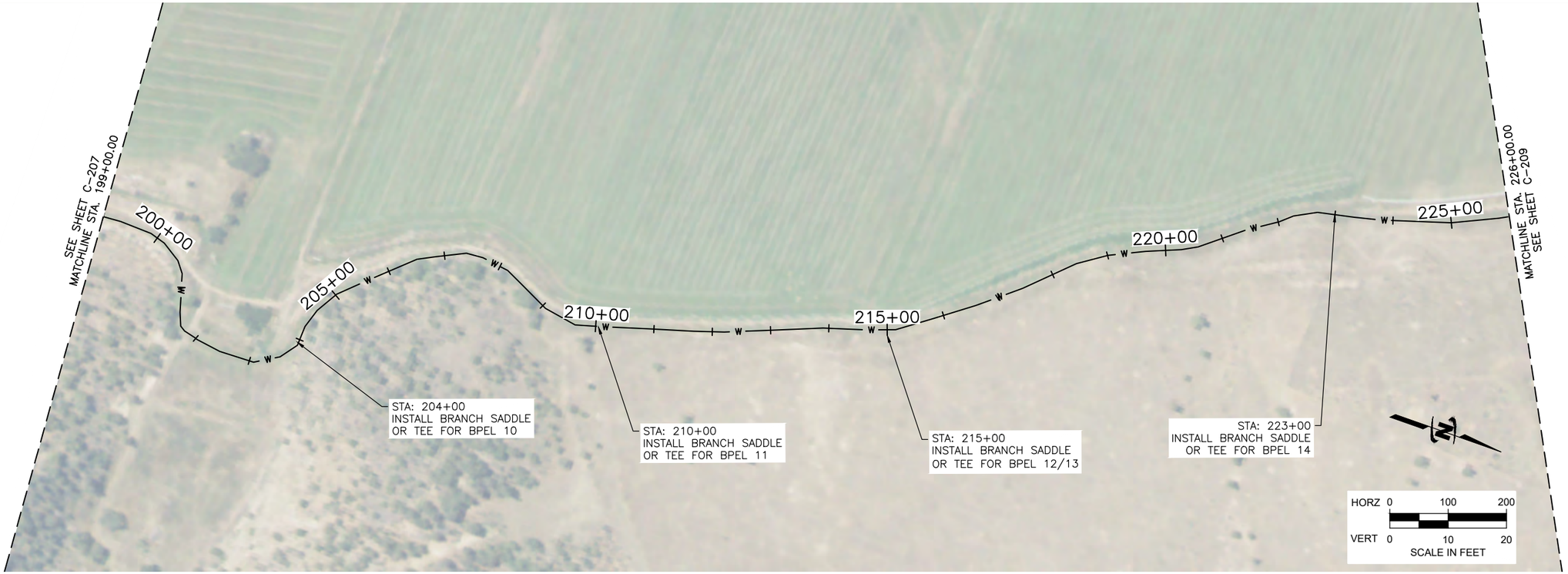

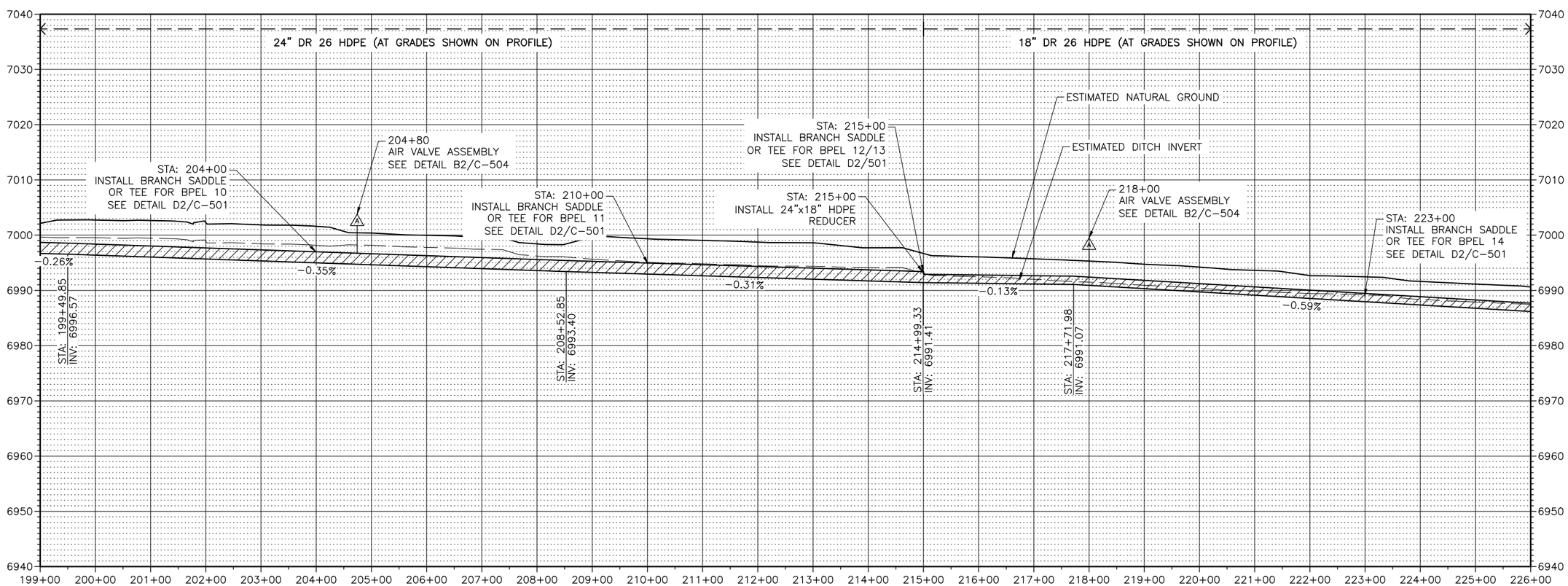

J-U-B ENGINEERS, INC.

J-U-B ENGINEERS, INC.
305 Main Street
Palisade, CO 81526
Phone: 970.208.8508
www.jub.com

PRELIMINARY PLANS

NOT FOR CONSTRUCTION

REUSE OF DRAWINGS
J-U-B SHALL RETAIN ALL COMMON LAW, STATUTORY, COPYRIGHT AND OTHER RESERVED RIGHTS OF THESE DRAWINGS, AND THE SAME SHALL NOT BE REUSED WITHOUT J-U-B'S PRIOR WRITTEN CONSENT. ANY REUSE WITHOUT WRITTEN CONSENT BY J-U-B WILL BE AT CLIENTS SOLE RISK AND WITHOUT LIABILITY OR LEGAL EXPOSURE TO J-U-B.

NO.	DESCRIPTION	BY	APR.	DATE

REVISION

BOSTWICK WATER CONSERVANCY DISTRICT EAST LATERAL PIPING PROJECT

PLAN AND PROFILE

FILE : 81-17-028_C-201X_EASTLAT2
JUB PROJ. # : 81-17-028
DRAWN BY: JMM/NJE
DESIGN BY: NJE
CHECKED BY: LDG
ONE INCH
AT FULL SIZE, IF NOT ONE INCH, SCALE ACCORDINGLY
LAST UPDATED: 9/18/2023

SHEET NUMBER:
C-208

Plot Date:9/18/2023 1:44 PM, Plotted By: Corey Blubaum
Date Created:5/19/2021 \\JUB\CENTRAL\CLIENTS\CO\BOSTWICKPARK\PROJECTS\81-20-017_PL-566PLANE\DESIGNE\EASTLATERAL\CAD\SHEET\CIVIL\81-17-028_C-201X_EASTLAT2.DWG

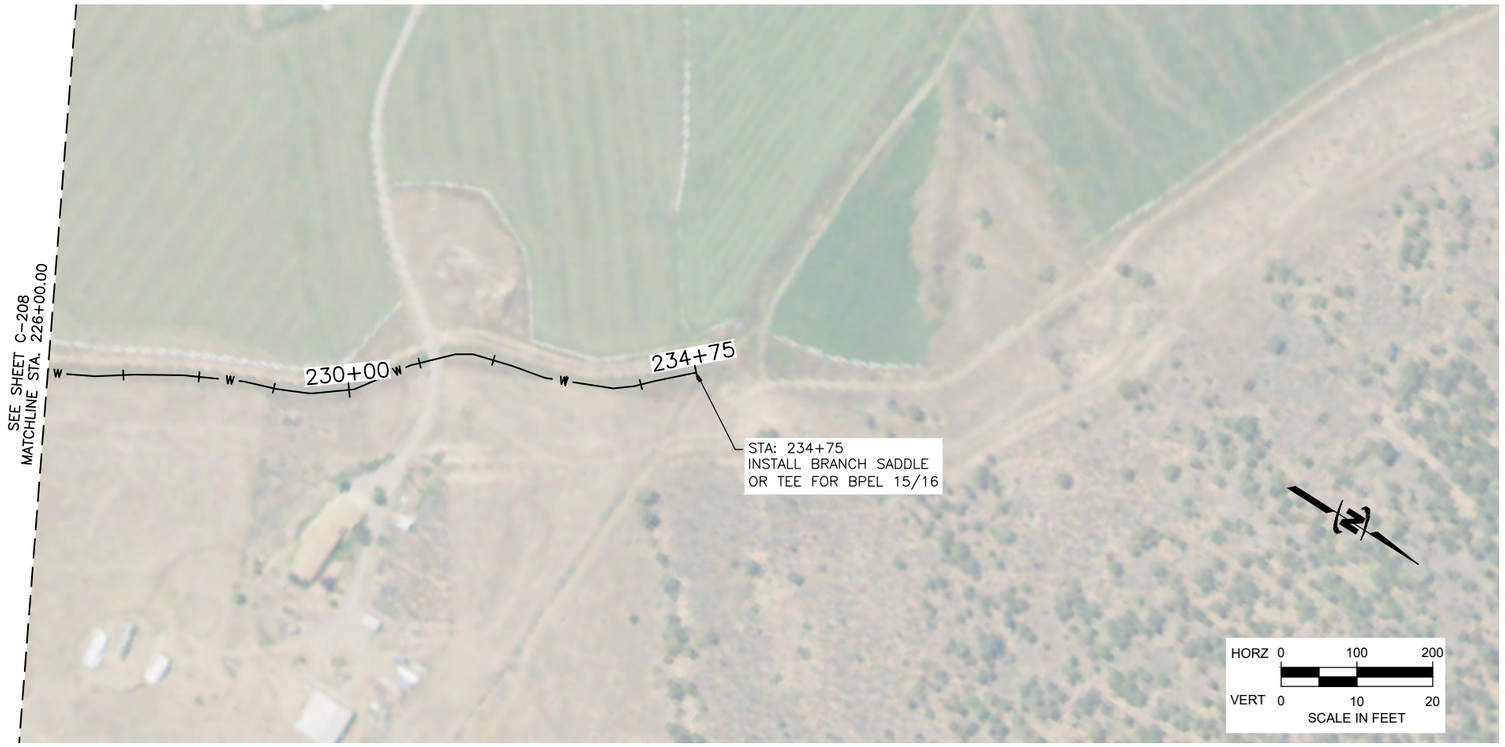

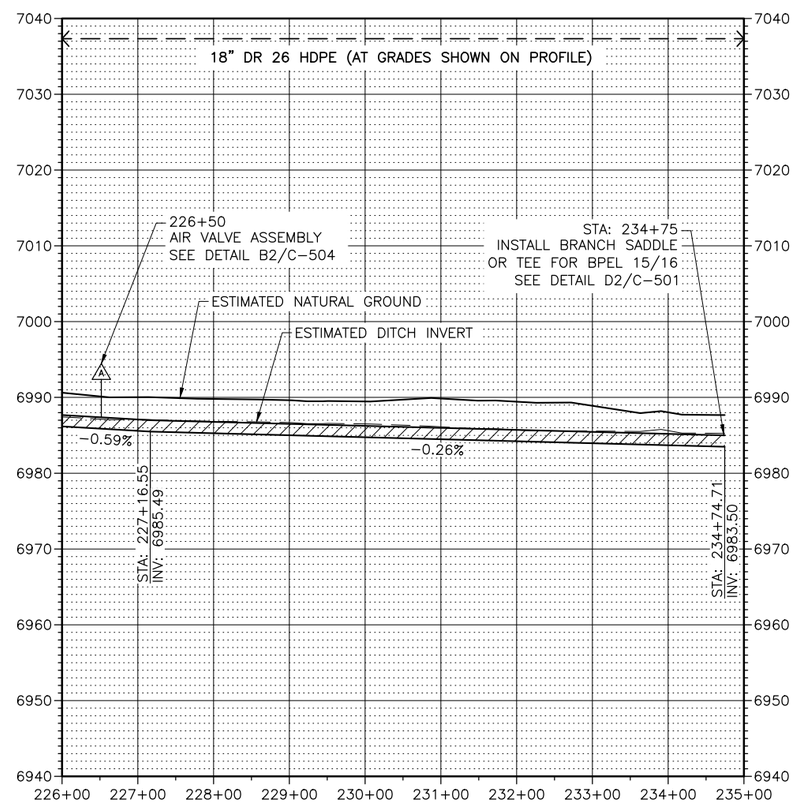

J-U-B ENGINEERS, INC.

J-U-B ENGINEERS, INC.
305 Main Street
Palisade, CO 81526
Phone: 970.208.8508
www.jub.com

PRELIMINARY PLANS

NOT FOR CONSTRUCTION

REUSE OF DRAWINGS
J-U-B SHALL RETAIN ALL COMMON LAW, STATUTORY, COPYRIGHT AND OTHER RESERVED RIGHTS OF THESE DRAWINGS, AND THE SAME SHALL NOT BE REUSED WITHOUT J-U-B'S PRIOR WRITTEN CONSENT. ANY REUSE WITHOUT WRITTEN CONSENT BY J-U-B WILL BE AT CLIENTS SOLE RISK AND WITHOUT LIABILITY OR LEGAL EXPOSURE TO J-U-B.

REVISION

NO.	DESCRIPTION	BY	APR.	DATE

BOSTWICK WATER CONSERVANCY DISTRICT
EAST LATERAL PIPING PROJECT

PLAN AND PROFILE

FILE : 81-17-028_C-201X_EASTLAT2
JUB PROJ. # : 81-17-028
DRAWN BY: JMM/NJE
DESIGN BY: NJE
CHECKED BY: LDG
ONE INCH
AT FULL SIZE, IF NOT ONE INCH, SCALE ACCORDINGLY
LAST UPDATED: 9/18/2023

SHEET NUMBER:
C-209

Plot Date:9/18/2023 1:44 PM Plotted By: Corey Blubaum
Date Created:5/19/2021 \\JUB\CENTRAL\CLIENTS\CO\BOSTWICKPARK\PROJECTS\81-20-017_PL-566PLANEA\DESIGN\EASTLATERAL\CAD\SHEET\CIVIL\81-17-028_C-201X_EASTLAT2.DWG

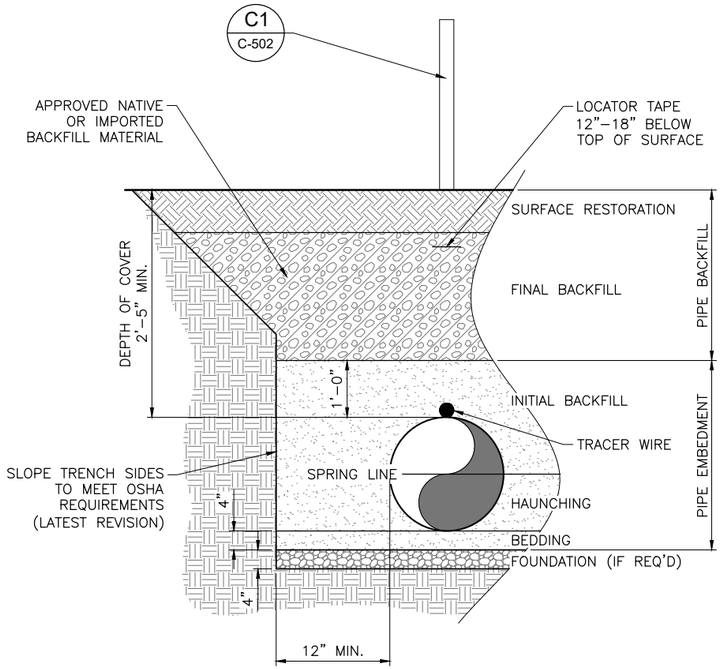

B1 TRENCH EXCAVATION AND BACKFILL
SCALE:N.T.S.

TRENCH BACKFILL NOTES:

1. SURFACE RESTORATION:
   A. USE APPROVED NATIVE OR IMPORTED BACKFILL MATERIAL PER SPEC SECTION 02324.
2. FINAL BACKFILL:
   A. 85% COMPACTION TYPICAL.
   B. 95% COMPACTION IN ROAD RIGHT–OF–WAY AND DRIVE WAYS.
   C. USE ASTM D 1557 MODIFIED PROCTOR FOR COUNTY ROADWAYS.
   D. USE ASTM D 695 STANDARD PROCTOR FOR ALL OTHER AREAS.
   E. SUBSOIL TYPE S1, ONSITE BACKFILL TYPE A2, IMPORTED GRANULAR FILL TYPE A1.
   F. INSTALL MAGNETIC LOCATOR TAPE 12"–18" BELOW FINISHED SURFACE. CENTER TAPE IN TRENCH.
3. EMBEDMENT:
   A. ONSITE EMBEDMENT TYPE A4, IMPORTED EMBEDMENT TYPE A3. LIMIT PARTICLE SIZE TO 1".
   B. INITIAL BACKFILL:
      B.1. 90% COMPACTION
      B.2. FILL VOIDS BETWEEN PIPE AND TRENCH SIDES.
      B.3. USE HAND HELD OR WALK BEHIND COMPACTION EQUIPMENT TO PROTECT PIPE.
      B.4. LIFT THICKNESS: MAX. 8" UNCOMPACTED.
   C. HAUNCHING:
      C.1. 90% COMPACTION
      C.2. SHOVEL–SLICE AND MANUAL TAMP EMBEDMENT MATERIAL TO ASSURE ALL VOIDS BETWEEN THE PIPE AND THE TRENCH BOTTOM AND SIDES ARE FILLED.
      C.3. COMPACT MATERIAL TO PROVIDE COMPLETE CONTACT WITH PIPE BOTTOM.
   D. BEDDING:
      D.1. LEVEL EMBEDMENT MATERIAL OR APPROVED UNDISTURBED NATIVE MATERIAL TO PROVIDE CONTINUOUS FIRM SUPPORT ALONG FULL LENGTH OF PIPE. HIGH SPOTS SHOULD BE SHAVED OFF AND LOW SPOTS FILLED WITH WELL TAMPED SOIL. EXCAVATE A BELL HOLE, IF NECESSARY, TO ASSURE NO UNDUE WEIGHT IS PLACED ON BELL AND THAT THE PIPE BARREL IS SUPPORTED.
4. FOUNDATION:
   A. NATIVE OR IMPORTED FOUNDATION TYPE A5, AS DIRECTED BY ENGINEER.
   B. USE FOUNDATION MATERIAL AS REQUIRED TO PROVIDE STRUCTURAL SUPPORT FOR PIPE.

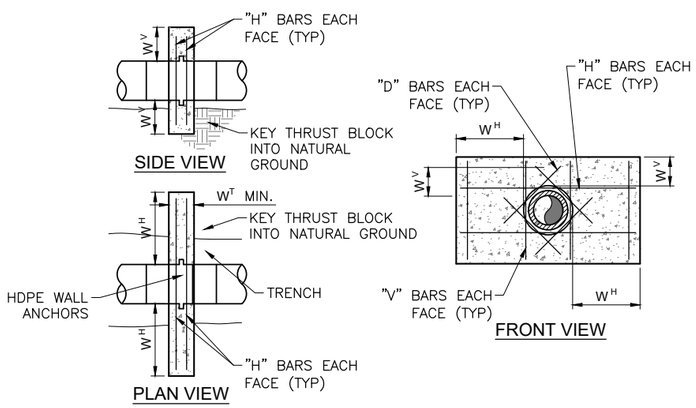

THRUST BLOCK DIMENSIONS									
PIPE SIZE	W^H	W^V	W^T	"H" BARS		"V" BARS		"D" BARS	
				SIZE	NO.	SIZE	NO.	SIZE	NO.
4"–8"	1.5'	0.5'	1.0'	#4	2	#4	4	#4	4
10"–12"	1.5'	1.0'	1.0'	#4	4	#4	4	#4	4
14"–20"	2.0'	1.0'	1.0'	#4	4	#4	6	#4	4
22"–24"	2.5'	1.0'	1.0'	#4	4	#4	6	#4	4
30"	2.75'	1.5'	2.0'	#5	6	#5	8	#5	4
32"	2.75'	1.75'	2.0'	#5	8	#5	8	#5	4
34"	2.75'	2.0'	2.0'	#5	8	#5	8	#5	4
36"	3.0'	2.0'	2.0'	#5	8	#5	8	#5	4

D1 INLINE THRUST BLOCK DIMENSIONS MAINLINE
SCALE:N.T.S.

NOTES:
1. SERVICES TO DRAIN BACK TO MAINLINE.
2. USE BENDS DOWNSTREAM OF METER TO ELEVATE OUTLET 8" TO 12" ABOVE METER ELEVATION TO ENSURE DRAINAGE TO MAINLINE.
3. PRESSURE DISSIPATION MANHOLES WILL REQUIRE DRAIN LINES
4. DIMENSIONS AND EXACT LAYOUTS OF TURNOUTS TO BE EVALUATED ON INDIVIDUAL BASIS

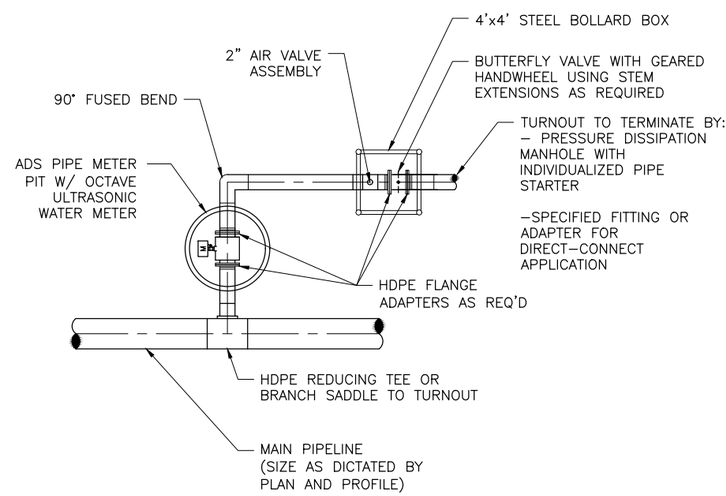

D2 TYPICAL PRESSURIZED TURNOUT CONFIGURATION
SCALE:N.T.S.

NOTES:
1. DIMENSIONS AND EXACT LAYOUTS OF TURNOUTS TO BE EVALUATED ON INDIVIDUAL BASIS

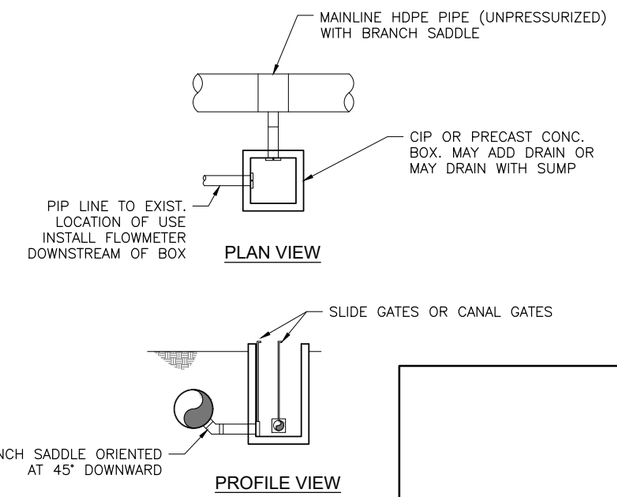

D3 CONCEPTUAL CONFIG. FOR UNPRESSURIZED TURNOUTS
SCALE: N.T.S.

J-U-B ENGINEERS, INC.
J-U-B ENGINEERS, INC.
305 South Main Street
Unit 6
Palisade, CO 84526
Phone: 907.208.8508
www.jub.com

PRELIMINARY PLANS

NOT FOR CONSTRUCTION

REUSE OF DRAWINGS
THIS DOCUMENT, AND THE IDEAS AND DESIGNS INCORPORATED HEREIN, AS AN INSTRUMENT OF PROFESSIONAL SERVICE, IS THE PROPERTY OF J-U-B ENGINEERS, Inc. AND IS NOT TO BE USED, IN WHOLE OR PART, FOR ANY OTHER PROJECT WITHOUT THE EXPRESS WRITTEN AUTHORIZATION OF J-U-B ENGINEERS, Inc.

REVISION		
NO.	DESCRIPTION	BY APR. DATE
1	PRV VAULT, EARLY TERM OF PIPE	NJE LDG 9/18

BOSTWICK WATER CONSERVANCY DISTRICT
EAST LATERAL PIPING PROJECT

DETAILS

FILE : 81-16-001_C-501X_EASTLAT
JUB PROJ. # : 81-17-028
DRAWN BY: JMM/NJE
DESIGN BY: NJE
CHECKED BY: LDG
ONE INCH
AT FULL SIZE, IF NOT ONE INCH, SCALE ACCORDINGLY
LAST UPDATED: 9/18/2023

SHEET NUMBER:
C-501

Plot Date:9/18/2023 1:45 PM Plotted By: Corey Blubaum
Date Created:5/18/2021 \\JUB\CENTRAL\CLIENTS\CO\BOSTWICKPARKPROJECTS\81-20-017_PL-566PLANEADESIGN\EASTLATERAL\CAD\SHEET\CIVIL\81-16-001_C-501X_EASTLAT.DWG

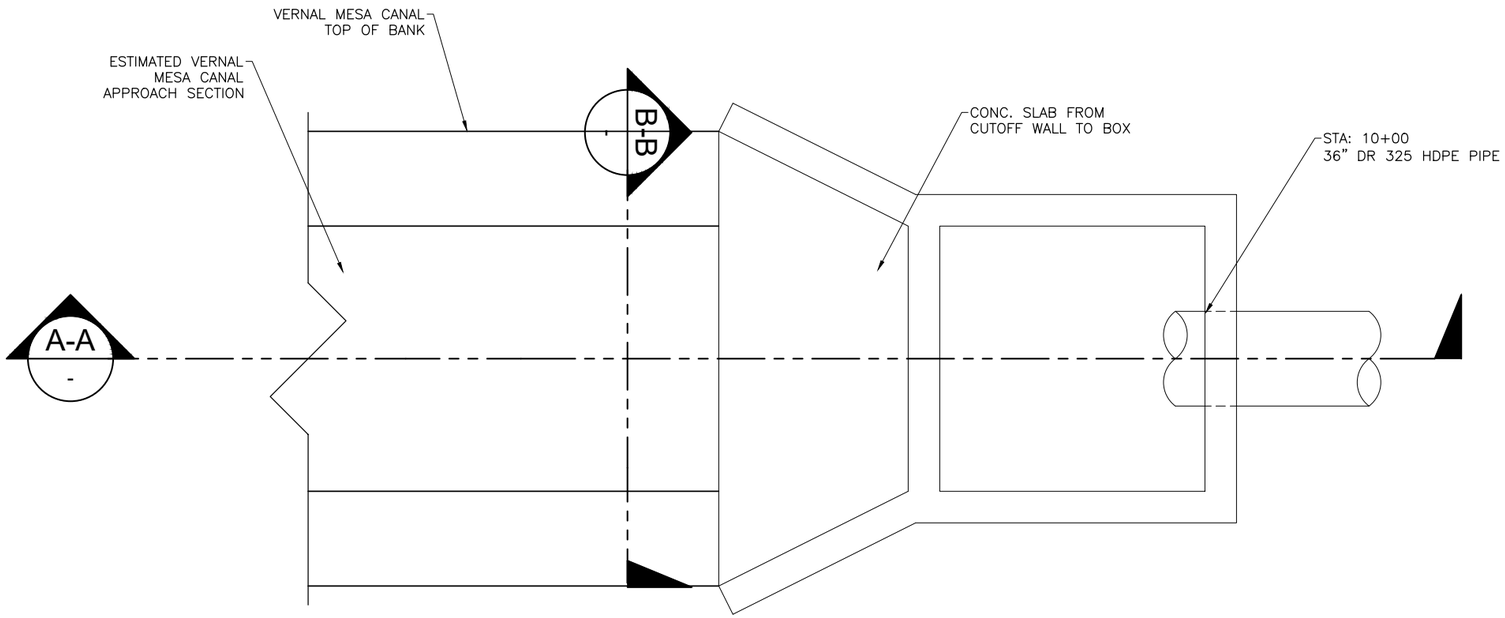

PLAN

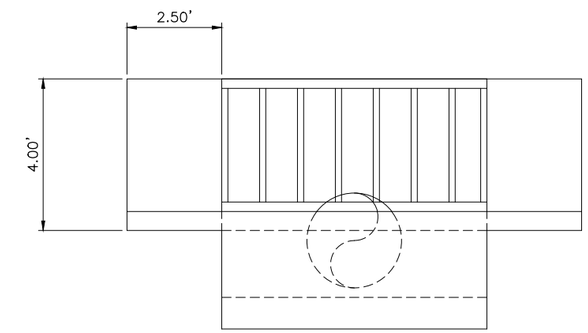

SECTION B-B

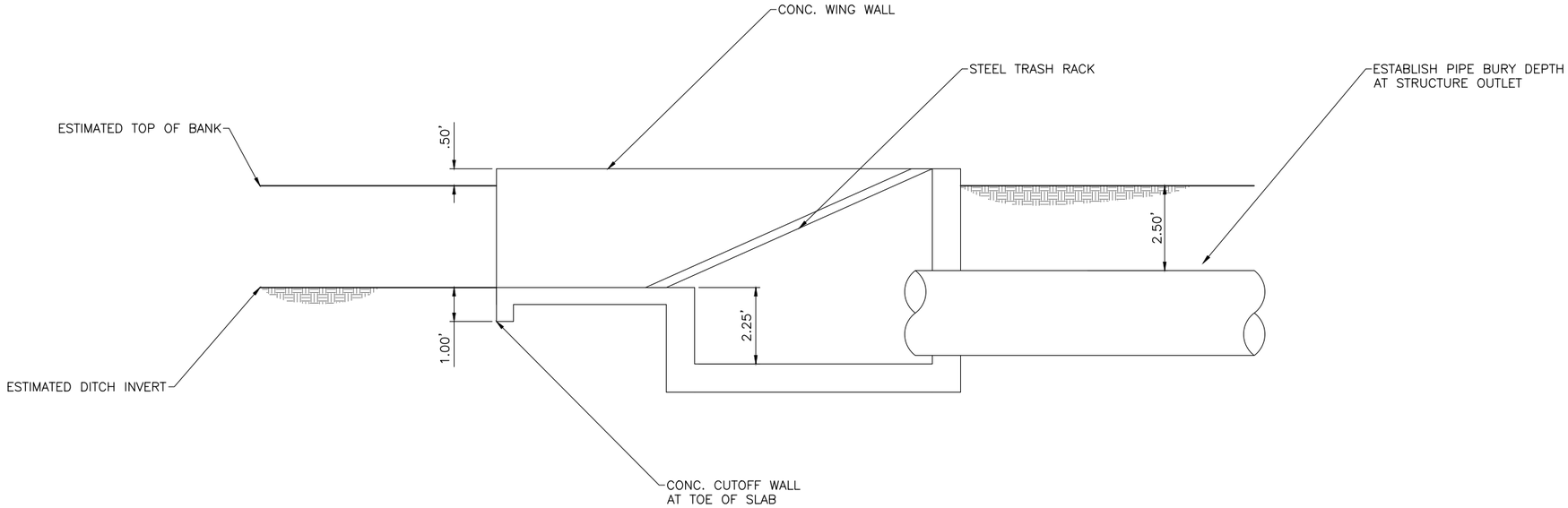

SECTION A-A

1 EAST LATERAL TRASH SCREEN (CONCEPTUAL)
SCALE: N.T.S.

Plot Date:9/18/2023 1:45 PM Plotted By: Corey Blubaum
Date Created:5/18/2021 \\JUB\CENTRAL\CLIENTS\CO\BOSTWICKPARK\PROJECTS\81-20-017_PL-566\PLANE\DESIGNE\EASTLATERAL\CAD\SHEET\CIVIL\81-16-001_C-501X_EASTLAT.DWG

J-U-B ENGINEERS, INC.
J-U-B ENGINEERS, INC.
305 South Main Street
Unit 6
Palisade, CO 84526
Phone: 907.208.8508
www.jub.com

PRELIMINARY PLANS

NOT FOR CONSTRUCTION

REUSE OF DRAWINGS
THIS DOCUMENT, AND THE IDEAS AND DESIGNS INCORPORATED HEREIN, AS AN INSTRUMENT OF PROFESSIONAL SERVICE, IS THE PROPERTY OF **J-U-B ENGINEERS, Inc.** AND IS NOT TO BE USED, IN WHOLE OR PART, FOR ANY OTHER PROJECT WITHOUT THE EXPRESS WRITTEN AUTHORIZATION OF **J-U-B ENGINEERS, Inc.**

REVISION			
NO.	DESCRIPTION	BY	DATE
1	PRV VAULT, EARLY TERM OF PIPE	NJE	LDG 9/18

BOSTWICK WATER CONSERVANCY DISTRICT
EAST LATERAL PIPING PROJECT

DETAILS

FILE : 81-16-001_C-501X_EASTLAT
JUB PROJ. # : 81-17-028
DRAWN BY: JMM/NJE
DESIGN BY: NJE
CHECKED BY: LDG
ONE INCH
AT FULL SIZE, IF NOT ONE INCH, SCALE ACCORDINGLY
LAST UPDATED: 9/18/2023

SHEET NUMBER:
C-65 C-502

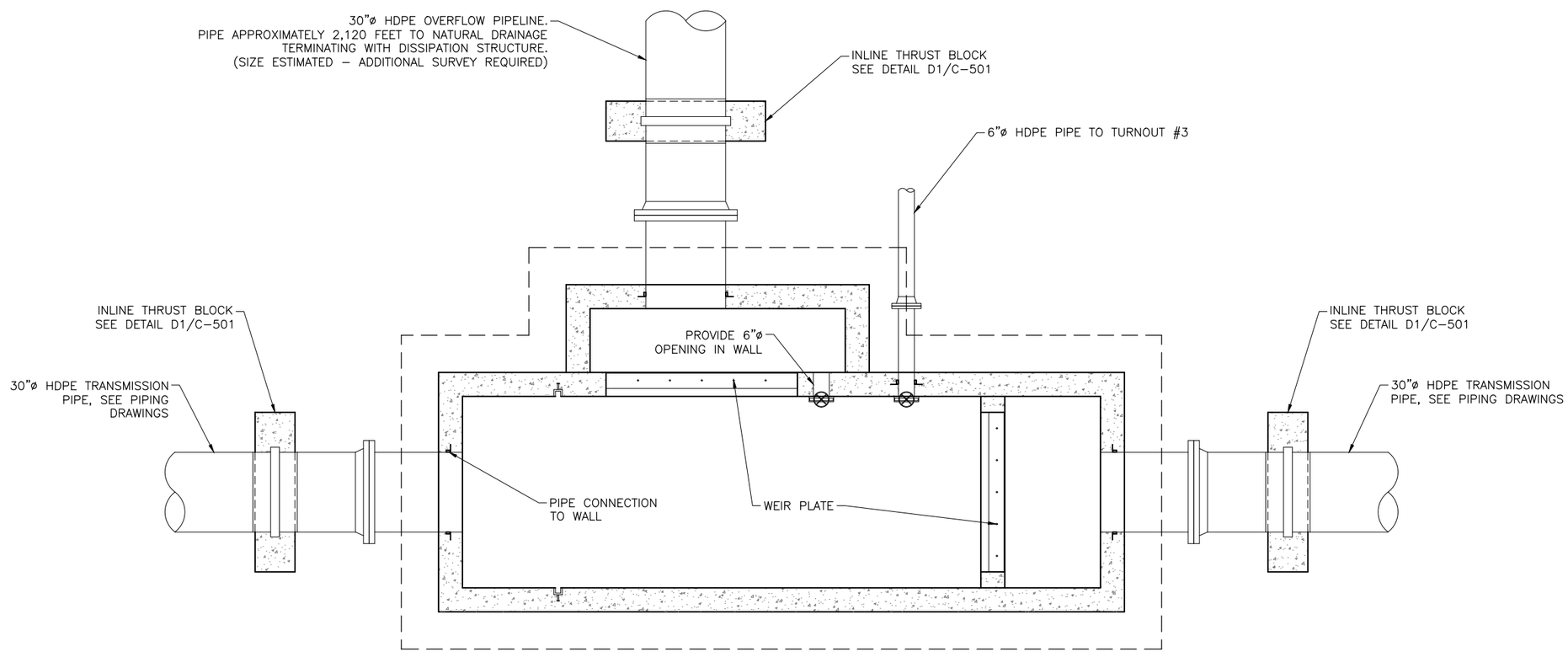

1 HYDRAULIC STRUCTURE FOUNDATION PLAN
SCALE: 1/2" = 1'-0"

J-U-B ENGINEERS, INC.

J-U-B ENGINEERS, INC.
305 South Main Street
Unit 6
Palisade, CO 84526
Phone: 907.208.8508
www.jub.com

PRELIMINARY PLANS

NOT FOR CONSTRUCTION

REUSE OF DRAWINGS
THIS DOCUMENT, AND THE IDEAS AND DESIGNS INCORPORATED HEREIN, AS AN INSTRUMENT OF PROFESSIONAL SERVICE, IS THE PROPERTY OF **J-U-B ENGINEERS, Inc.** AND IS NOT TO BE USED, IN WHOLE OR PART, FOR ANY OTHER PROJECT WITHOUT THE EXPRESS WRITTEN AUTHORIZATION OF **J-U-B ENGINEERS, Inc.**

REVISION			
NO.	DESCRIPTION	BY	APR. DATE
1	PRV VAULT EARLY TERM OF PIPE	NJE	LDG 9/18

BOSTWICK WATER CONSERVANCY DISTRICT
EAST LATERAL PIPING PROJECT

DETAILS

FILE : 81-16-001_C-501X_EASTLAT
JUB PROJ. # : 81-17-028
DRAWN BY: JMM/NJE
DESIGN BY: NJE
CHECKED BY: LDG
ONE INCH
AT FULL SIZE, IF NOT ONE INCH, SCALE ACCORDINGLY
LAST UPDATED: 9/18/2023

SHEET NUMBER:
C-503

Plot Date:9/18/2023 1:45 PM Plotted By: Corey Blabaum
Date Created:5/18/2021 \\JUB\CENTRAL\CLIENTS\CO\BOSTWICKPARK\PROJECTS\81-20-017_PL-566PLANEA\DESIGN\EASTLATERAL\CAD\SHEET\CIVIL\81-16-001_C-501X_EASTLAT.DWG

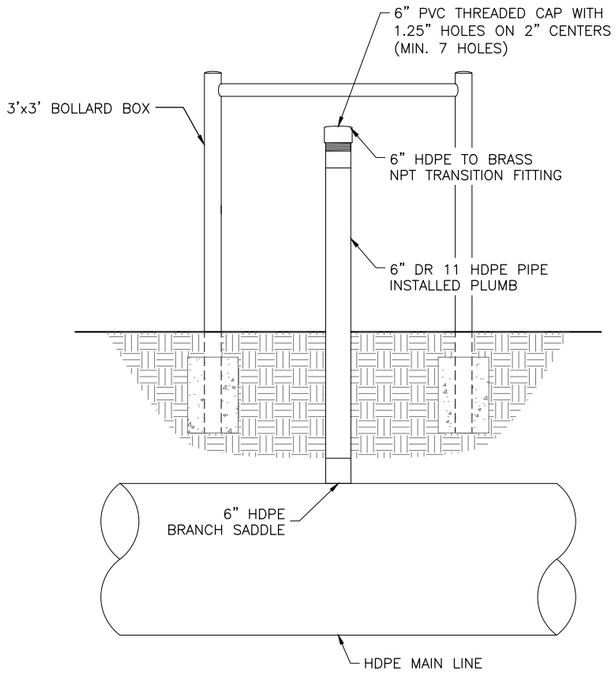

B1 TYPE 2 OPEN AIR VENT
SCALE:N.T.S.

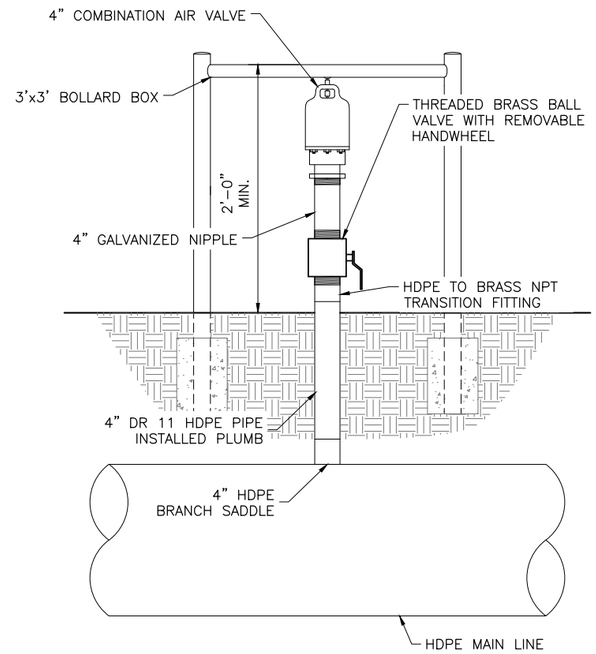

B2 AIR VALVE ASSEMBLY
SCALE:N.T.S.

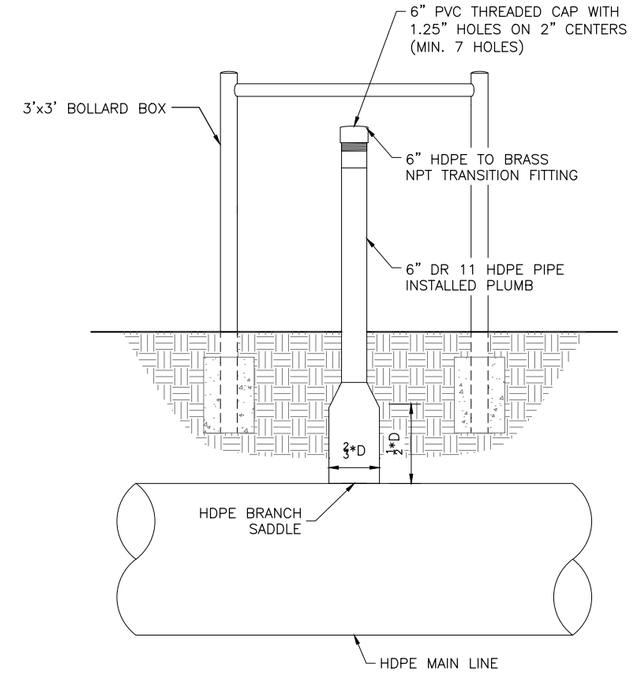

B3 TYPE 1 OPEN AIR VENT
SCALE:N.T.S.

J-U-B ENGINEERS, INC.

J-U-B ENGINEERS, INC.
305 South Main Street
Unit 6
Palisade, CO 84526
Phone: 907.208.8508
www.jub.com

PRELIMINARY PLANS

NOT FOR CONSTRUCTION

REUSE OF DRAWINGS
THIS DOCUMENT, AND THE IDEAS AND DESIGNS INCORPORATED HEREIN, AS AN INSTRUMENT OF PROFESSIONAL SERVICE, IS THE PROPERTY OF **J-U-B ENGINEERS, Inc.** AND IS NOT TO BE USED, IN WHOLE OR PART, FOR ANY OTHER PROJECT WITHOUT THE EXPRESS WRITTEN AUTHORIZATION OF **J-U-B ENGINEERS, Inc.**

REVISION			
NO.	DESCRIPTION	BY	DATE
1	PRV VAULT, EARLY TERM OF PIPE	NJE	LDG 9/18

BOSTWICK WATER CONSERVANCY DISTRICT
EAST LATERAL PIPING PROJECT

DETAILS

FILE : 81-16-001_C-501X_EASTLAT
JUB PROJ. # : 81-17-028
DRAWN BY: JMM/NJE
DESIGN BY: NJE
CHECKED BY: LDG
ONE INCH
AT FULL SIZE, IF NOT ONE INCH, SCALE ACCORDINGLY
LAST UPDATED: 9/18/2023

SHEET NUMBER:
C-504

Plot Date:9/18/2023 1:45 PM Plotted By: Corey Blubaum
Date Created:5/18/2021 \\JUB\CENTRAL\CLIENTS\CO\BOSTWICKPARK\PROJECTS\81-20-017_PL-566\PLANE\DESIGN\EASTLATERAL\CAD\SHEET\CIVIL\81-16-001_C-501X_EASTLAT.DWG

BOSTWICK PARK WATER CONSERVANCY DISTRICT

WEST LATERAL PIPING PHASE 2 - 30% PLANS

SEPTEMBER 2023

PRELIMINARY NOT FOR CONSTRUCTION

Sheet List Table	
Sheet Number	Sheet Title
G-001	COVER
C-001	SHEET INDEX
C-201	PLAN AND PROFILE
C-202	PLAN AND PROFILE
C-203	PLAN AND PROFILE
C-204	PLAN AND PROFILE
C-205	PLAN AND PROFILE
C-206	PLAN AND PROFILE
C-207	PLAN AND PROFILE
C-208	PLAN AND PROFILE
C-501	DETAILS
C-502	DETAILS

PROJECT NO. 81-20-017

J-U-B ENGINEERS, INC.

305 S. Main Street, Suite 6, Palisade, CO 81526
p 970 208 8508 *w* www.jub.com

OTHER J-U-B COMPANIES THE LANGDON GROUP GATEWAY MAPPING INC.

NOTICE AND DISCLAIMER

THE PLANS AND/OR SPECIFICATIONS (DOCUMENTS) ARE THE PROPERTY OF J–U–B ENGINEERS, INC. ("J–U–B") AND BY USING THE DOCUMENTS YOU AGREE TO BE BOUND BY THE TERMS AND CONDITIONS IN THIS NOTICE AND DISCLAIMER.

THE USE OF THE DOCUMENTS CREATES NO DUTY IN CONTRACT, TORT, EQUITY OR OTHERWISE OF J–U–B TO THE USER. THE USER SHALL NOT (I) DISSEMINATE THE DOCUMENTS, OR ANY PART THEREOF, TO OTHERS WITHOUT THE WRITTEN CONSENT OF J–U–B, OR (II) USE THE DOCUMENTS, OR ANY PART THEREOF, FOR ANY USE OTHER THAN AS DESIGNATED HEREIN FOR THE INTENDED PROJECT. THE DOCUMENTS ARE NOT INTENDED FOR USE IN CREATING DTM FOR GRADING OR EARTHWORK, SURVEY STAKING LAYOUT (UNLESS SPECIFICALLY IDENTIFIED AS SUCH IN THE DOCUMENTS), OR PROPERTY BOUNDARY LAYOUTS.

J–U–B AND ITS AGENTS SHALL NOT BE LIABLE FOR ANY DAMAGES OR CLAIMS ARISING OUT OF THE UNAUTHORIZED USE OR MISUSE OF THE DOCUMENTS , OR ANY PART THEREOF, WHETHER SUCH DAMAGE OR CLAIM IS BASED IN CONTRACT, TORT OR OTHERWISE. THE USER HEREBY RELEASES AND SHALL DEFEND, INDEMNIFY AND HOLD J–U–B AND ITS AGENTS HARMLESS FROM ANY DAMAGES OR CLAIMS ARISING OUT OF, OR RELATED IN ANY WAY TO, THE USER'S UNAUTHORIZED USE OR MISUSE OF THE DOCUMENTS, OR ANY PART THEREOF.

IF THE DOCUMENTS ARE PROVIDED IN ELECTRONIC FORMAT, THE ELECTRONIC DOCUMENTS ARE SUBJECT TO THE PROVISIONS OF J–U–B's "ELECTRONIC DOCUMENT/DATA LIMITED LICENSE" FOUND AT EDOCS.JUB.COM.

LAST UPDATED: 9/19/2023

SHEET NUMBER:

G-001

Plot Date:9/19/2023 \\JUB\CENTRAL\CLIENTS\CO\BOSTWICKPARK\PROJECTS\81-20-017_PL-566PLANEA\DESIGN\WESTLATERAL\CAD\SHEETPH2\GENERAL\WESTLAT_PH2_COVER.DWG

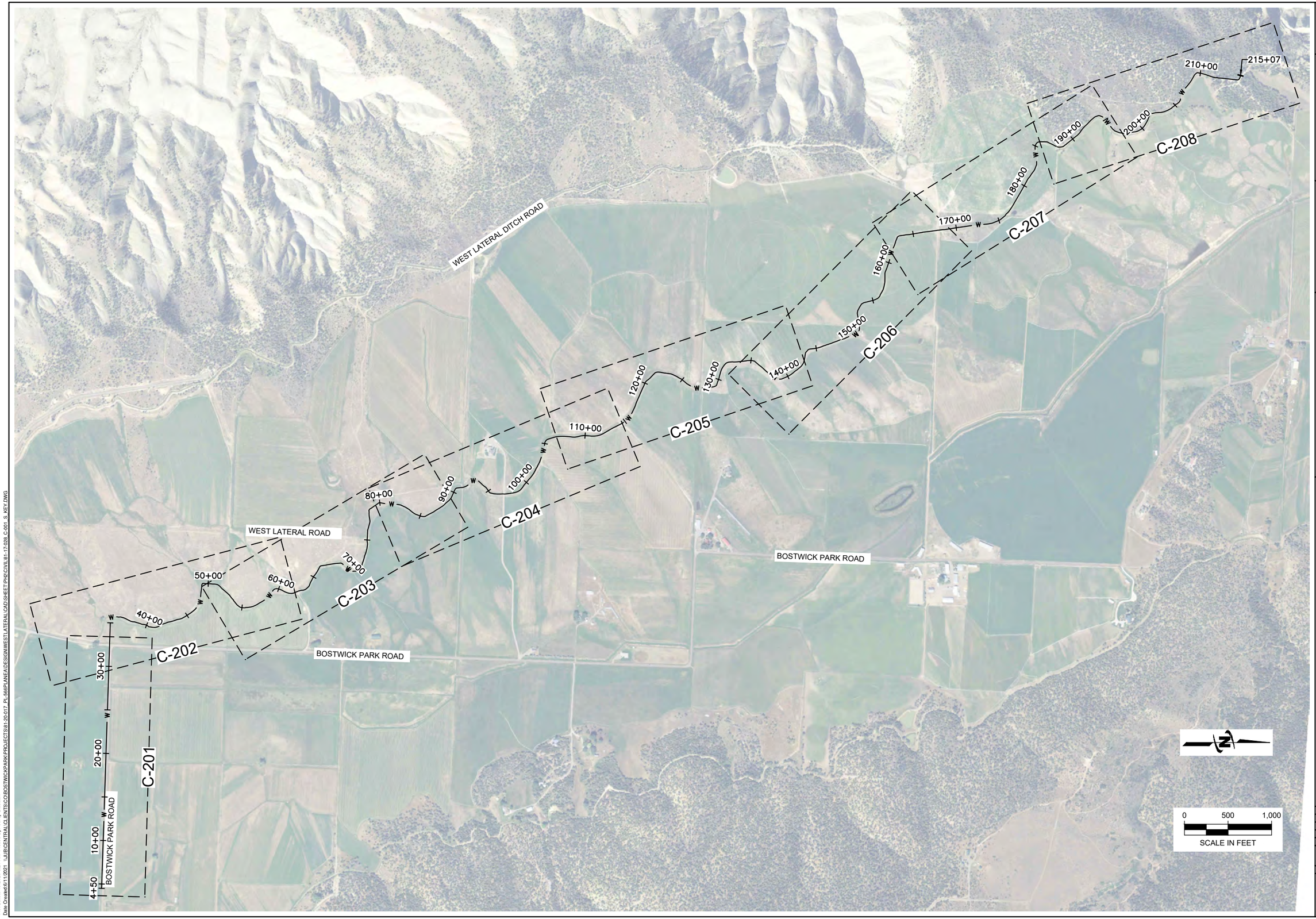

J-U-B ENGINEERS, INC.

J-U-B ENGINEERS, INC.
305 Main Street
Palisade, CO 81526
Phone: 970.208.8508
www.jub.com

PRELIMINARY PLANS

NOT FOR CONSTRUCTION

REUSE OF DRAWINGS

J-U-B SHALL RETAIN ALL OWNERSHIP, HISTORY, COPYRIGHT AND OTHER RESERVED RIGHTS OF THESE DRAWINGS, AND THE SAME SHALL NOT BE REUSED WITHOUT J-U-B'S PRIOR WRITTEN CONSENT. ANY REUSE WITHOUT WRITTEN CONSENT BY J-U-B WILL BE AT CLIENTS SOLE RISK AND WITHOUT LIABILITY OR LEGAL EXPOSURE TO J-U-B.

REVISION

NO.	DESCRIPTION	BY	APR.	DATE

BOSTWICK PARK CONSERVATION DISTRICT
WEST LATERAL PIPING PHASE 2 30% PLANS

SHEET INDEX

FILE : 81-17-028_C-001_S_KEY
JUB PROJ. # : 81-17-028
DRAWN BY: JMM/NJE
DESIGN BY: NJE
CHECKED BY: LDG

ONE INCH
AT FULL SIZE, IF NOT ONE INCH, SCALE ACCORDINGLY

LAST UPDATED: 9/19/2023

SHEET NUMBER:

C-001

Plot Date:9/19/2023 9:21 AM Printed By: Corey Blubaum
Date Created:6/11/2021 \\JUB\CENTRAL\CLIENTS\CO\BOSTWICKPARK\PROJECTS\81-20-017_PL-566\PLANE\DESIGN\WESTLATERAL\CAD\SHEET\PHI\CIVIL\81-17-028_C-001_S_KEY.DWG

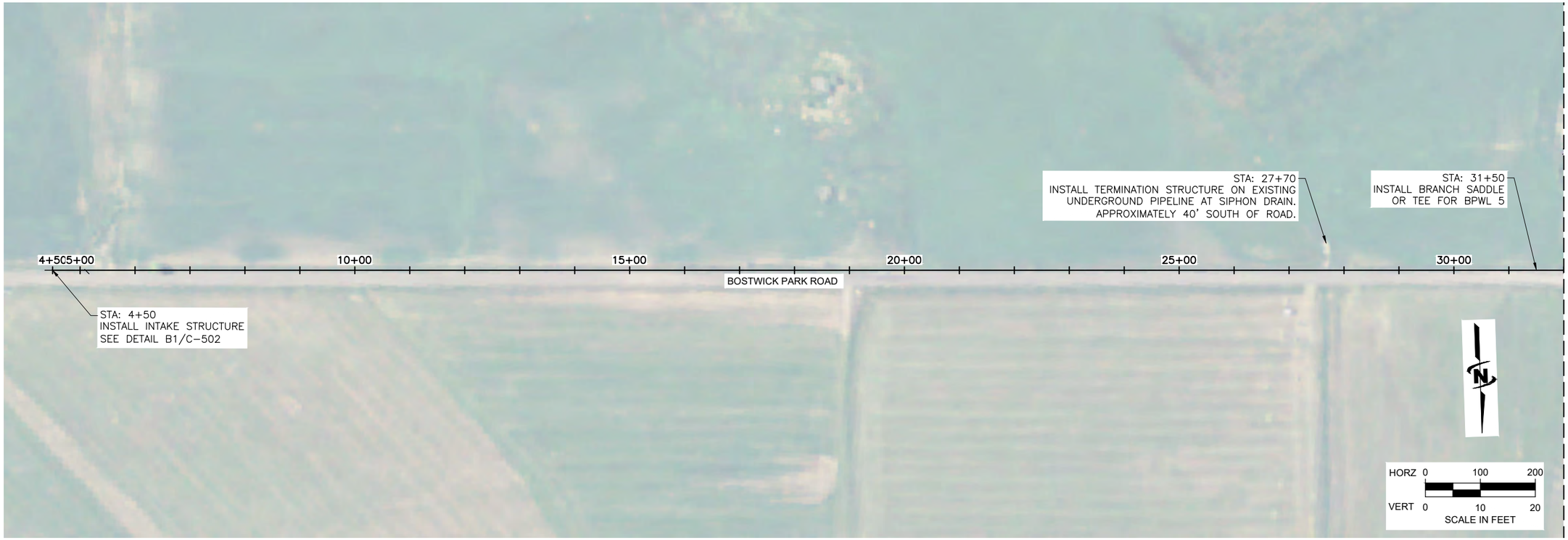

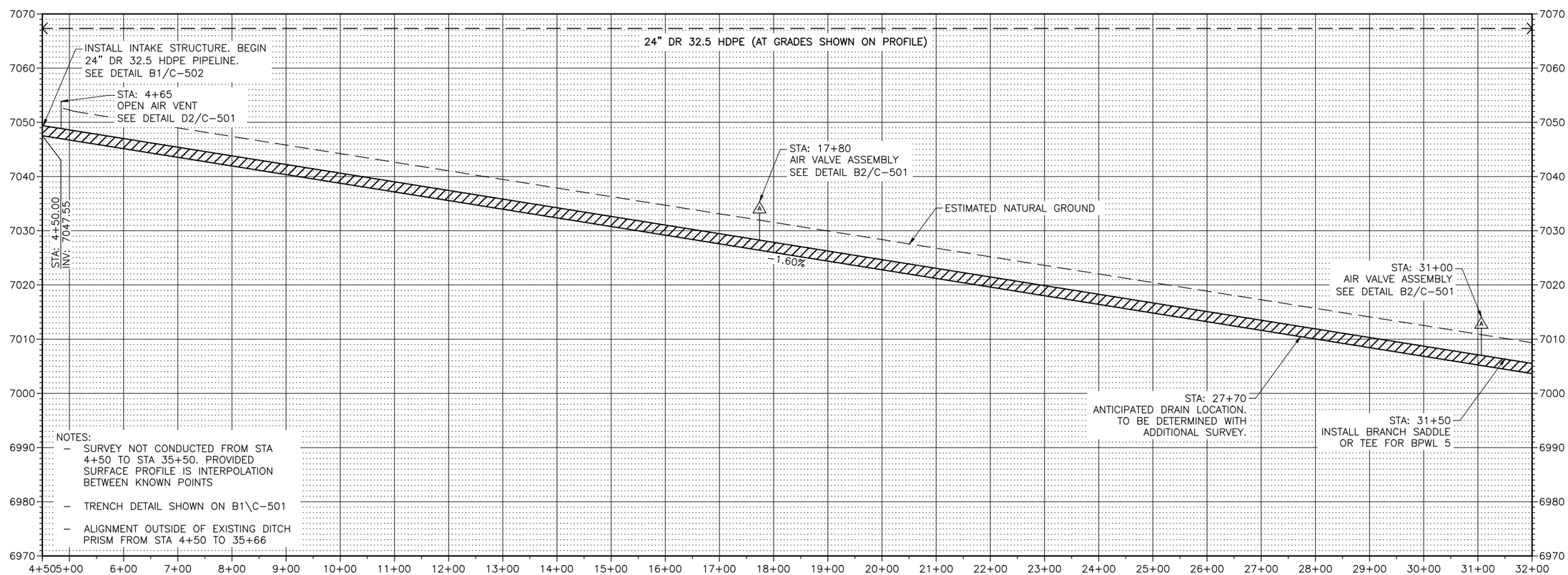

NOTES:

- SURVEY NOT CONDUCTED FROM STA 4+50 TO STA 35+50. PROVIDED SURFACE PROFILE IS INTERPOLATION BETWEEN KNOWN POINTS
- TRENCH DETAIL SHOWN ON B1\C-501
- ALIGNMENT OUTSIDE OF EXISTING DITCH PRISM FROM STA 4+50 TO 35+66

J-U-B ENGINEERS, INC.

J-U-B ENGINEERS, INC.
305 Main Street
Palisade, CO 81526
Phone: 970.208.8508
www.jub.com

PRELIMINARY PLANS

NOT FOR CONSTRUCTION

REUSE OF DRAWINGS
J-U-B SHALL RETAIN ALL COMMON LAW, STATUTORY, COPYRIGHT AND OTHER RESERVED RIGHTS OF THESE DRAWINGS, AND THE SAME SHALL NOT BE REUSED WITHOUT J-U-B'S PRIOR WRITTEN CONSENT. ANY REUSE WITHOUT WRITTEN CONSENT BY J-U-B WILL BE AT CLIENTS SOLE RISK AND WITHOUT LIABILITY OR LEGAL EXPOSURE TO J-U-B.

NO.	DESCRIPTION	BY	APR.	DATE
	REVISION			

BOSTWICK PARK CONSERVATION DISTRICT
WEST LATERAL PIPING PHASE 2 30% PLANS

PLAN AND PROFILE

FILE : 81-17-028_C-201X_WESTLAT_PH2
JUB PROJ. # : 81-17-028
DRAWN BY: JMM/NJE
DESIGN BY: NJE
CHECKED BY: LDG
ONE INCH
AT FULL SIZE, IF NOT ONE INCH, SCALE ACCORDINGLY
LAST UPDATED: 9/19/2023

SHEET NUMBER:
C-201

Plot Date:9/19/2023 9:22 AM Plotted By: Corey Blubaum
Date Created:9/30/2021 \\JUB\CENTRAL\CLIENTS\CO\BOSTWICKPARK\PROJECTS\81-20-017_PL-566PLANE\DESIGN\WESTLATERAL\CAD\SHEET\PH2\CIVIL\81-17-028_C-201X_WESTLAT_PH2.DWG

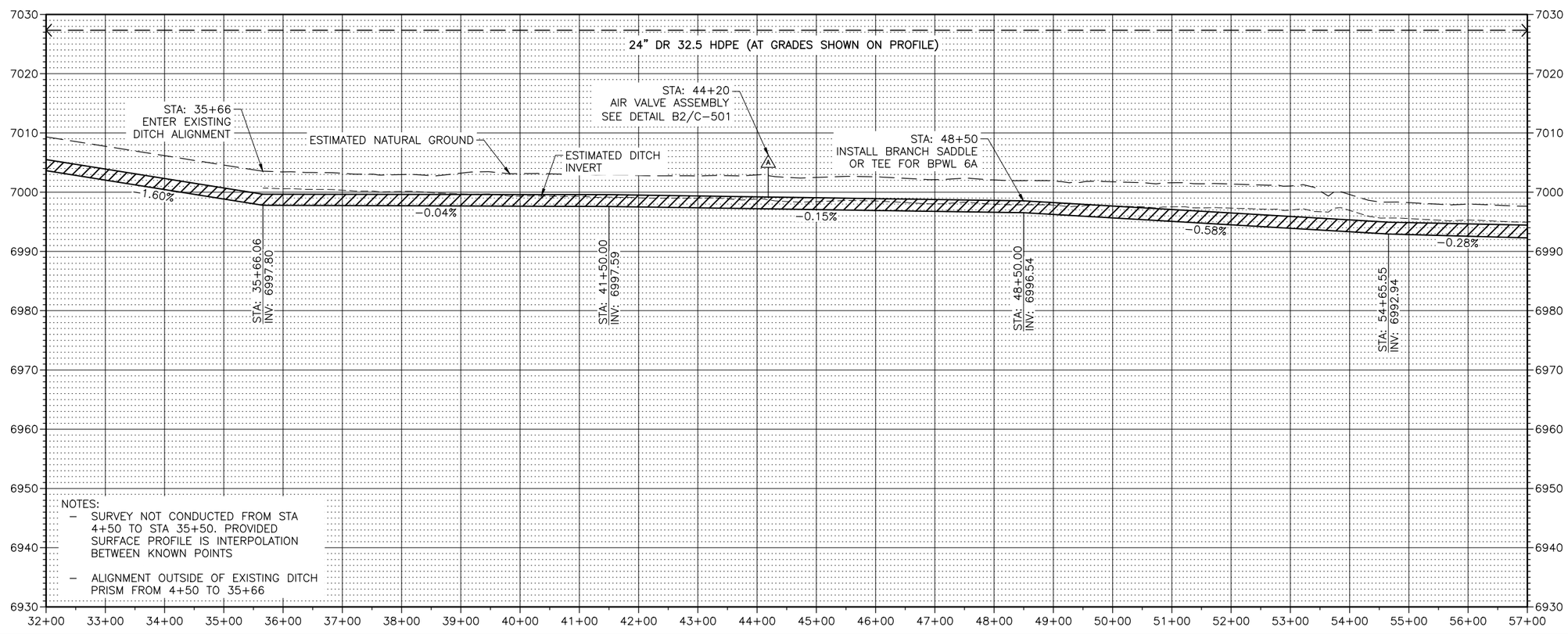

NOTES:
- SURVEY NOT CONDUCTED FROM STA 4+50 TO STA 35+50. PROVIDED SURFACE PROFILE IS INTERPOLATION BETWEEN KNOWN POINTS
- ALIGNMENT OUTSIDE OF EXISTING DITCH PRISM FROM 4+50 TO 35+66

J-U-B ENGINEERS, INC.

J-U-B ENGINEERS, INC.
305 Main Street
Palisade, CO 81526
Phone: 970.208.8508
www.jub.com

PRELIMINARY PLANS

NOT FOR CONSTRUCTION

REUSE OF DRAWINGS
J-U-B SHALL RETAIN ALL COMMON LAW, STATUTORY, COPYRIGHT AND OTHER RESERVED RIGHTS OF THESE DRAWINGS, AND THE SAME SHALL NOT BE REUSED WITHOUT J-U-B'S PRIOR WRITTEN CONSENT. ANY REUSE WITHOUT WRITTEN CONSENT BY J-U-B WILL BE AT CLIENT'S SOLE RISK AND WITHOUT LIABILITY OR LEGAL EXPOSURE TO J-U-B.

NO.	REVISION	BY	APR.	DATE

NO.	DESCRIPTION

BOSTWICK PARK CONSERVATION DISTRICT WEST LATERAL PIPING PHASE 2 30% PLANS

PLAN AND PROFILE

FILE : 81-17-028_C-201X_WESTLAT PH2
JUB PROJ. # : 81-17-028
DRAWN BY: JMM/NJE
DESIGN BY: NJE
CHECKED BY: LDG
ONE INCH
AT FULL SIZE, IF NOT ONE INCH, SCALE ACCORDINGLY
LAST UPDATED: 9/19/2023

SHEET NUMBER:
C-202

Plot Date:9/19/2023 9:22 AM Plotted By: Corey Blubaum
Date Created:9/30/2021 \\JUB\CENTRAL\CLIENTS\CO\BOSTWICKPARK\PROJECTS\81-20-017_PL-566\PLANE\DESIGN\WESTLATERAL\CAD\SHEET\PH2\CIVIL\81-17-028_C-201X_WESTLAT_PH2.DWG

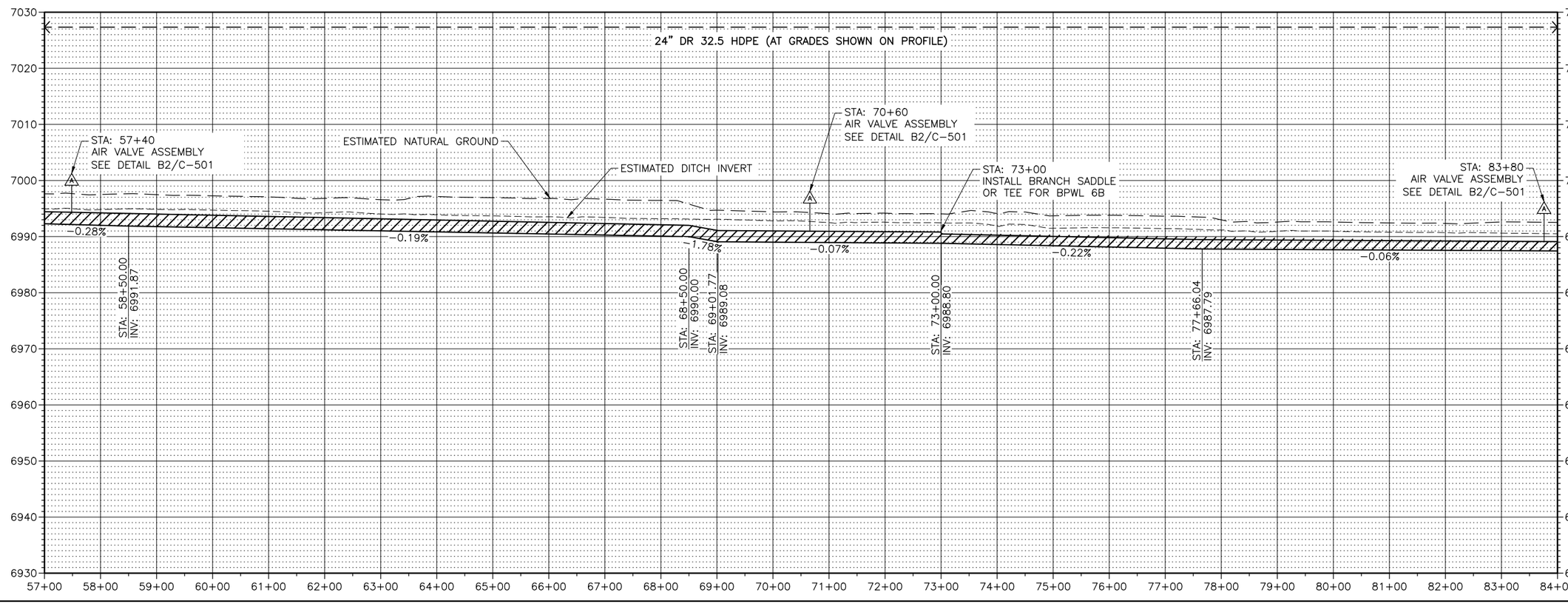

J-U-B ENGINEERS, INC.

J-U-B ENGINEERS, INC.
305 Main Street
Palisade, CO 81526
Phone: 970.208.8508
www.jub.com

PRELIMINARY PLANS

NOT FOR CONSTRUCTION

REUSE OF DRAWINGS: J-U-B SHALL RETAIN ALL COPYRIGHT AND OTHER RESERVED RIGHTS OF THESE DRAWINGS, AND THE SAME SHALL NOT BE REUSED WITHOUT J-U-B'S PRIOR WRITTEN CONSENT. ANY REUSE WITHOUT WRITTEN CONSENT BY J-U-B WILL BE AT CLIENTS SOLE RISK AND WITHOUT LIABILITY OR LEGAL EXPOSURE TO J-U-B.

NO.	DESCRIPTION	BY	APR.	DATE
	REVISION			

BOSTWICK PARK CONSERVATION DISTRICT WEST LATERAL PIPING PHASE 2 30% PLANS

PLAN AND PROFILE

FILE : 81-17-028_C-201X_WESTLAT_PH2
JUB PROJ. # : 81-17-028
DRAWN BY: JMM/NJE
DESIGN BY: NJE
CHECKED BY: LDG
ONE INCH
AT FULL SIZE, IF NOT ONE INCH, SCALE ACCORDINGLY
LAST UPDATED: 9/19/2023

SHEET NUMBER:
C-203

Plot Date:9/19/2023 9:22 AM Plotted By: Corey Blubaum
Date Created:9/30/2021 \\JUB\CENTRAL\CLIENTS\CO\BOSTWICKPARK\PROJECTS\81-20-017_PL-566\PLANE\DESIGN\WESTLATERAL\CAD\SHEET\PH2\CIVIL\81-17-028_C-201X_WESTLAT_PH2.DWG

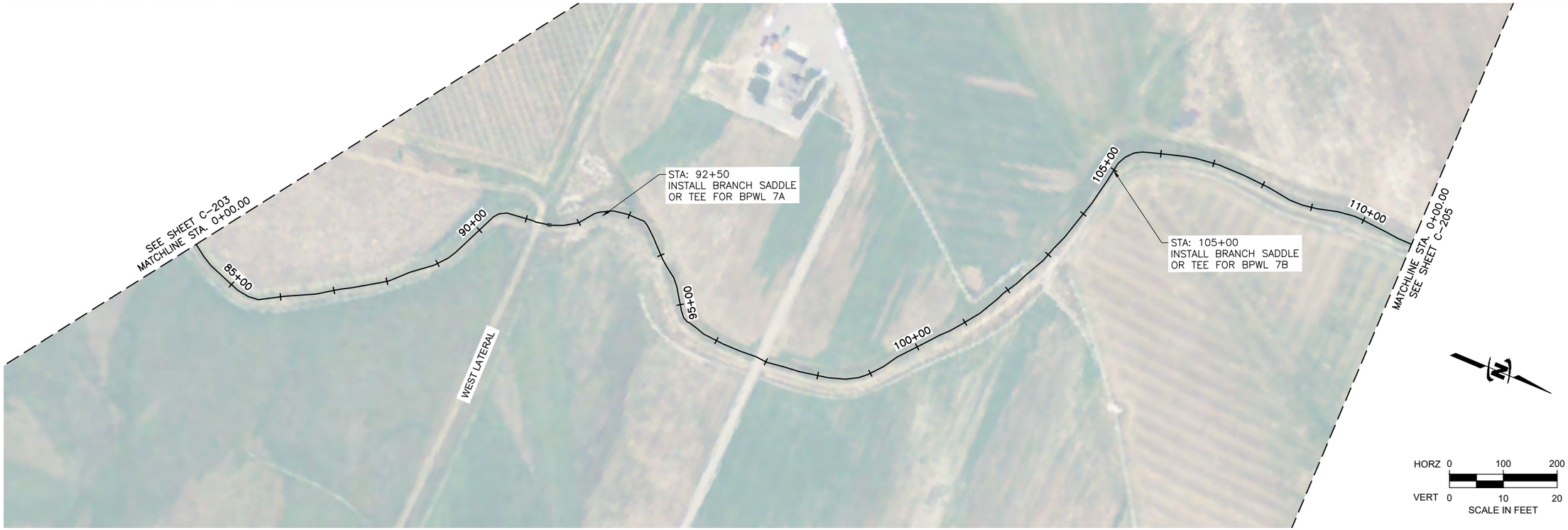

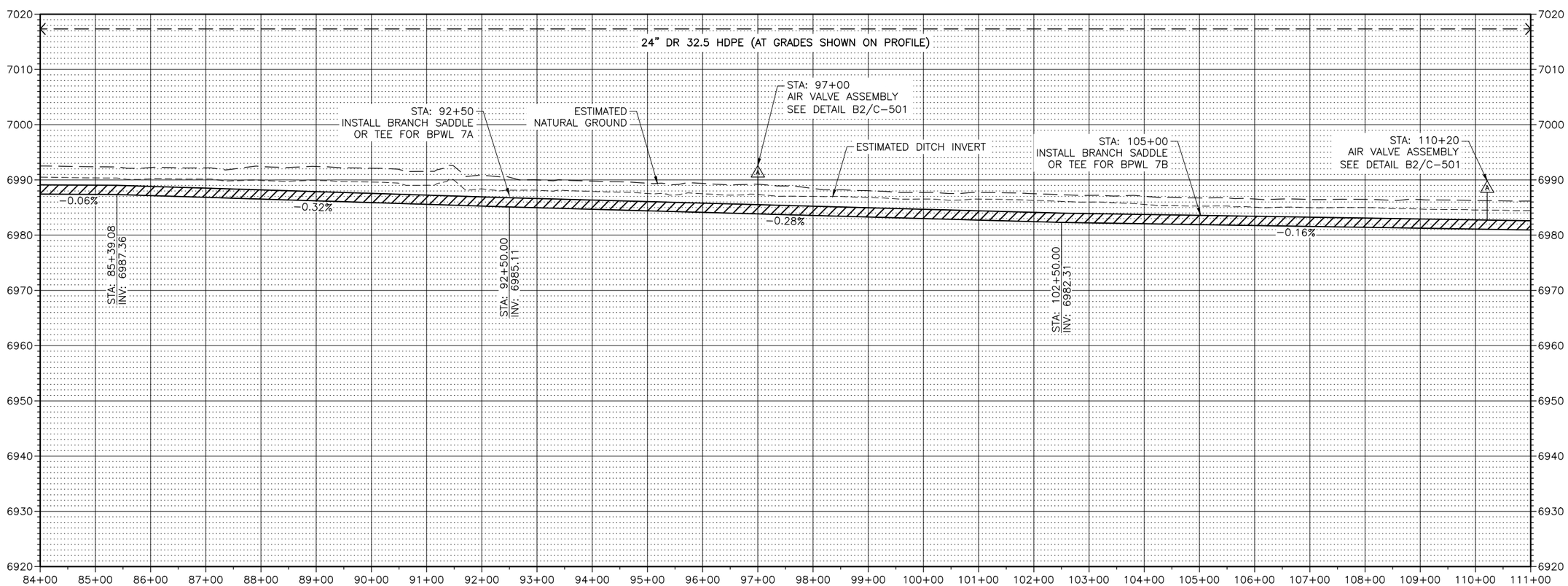

J-U-B ENGINEERS, INC.

J-U-B ENGINEERS, INC.
305 Main Street
Palisade, CO 81526
Phone: 970.208.8508
www.jub.com

PRELIMINARY PLANS

NOT FOR CONSTRUCTION

REUSE OF DRAWINGS
J-U-B SHALL RETAIN ALL COMMON LAW, STATUTORY, COPYRIGHT AND OTHER RESERVED RIGHTS OF THESE DRAWINGS, AND THE SAME SHALL NOT BE REUSED WITHOUT J-U-B'S PRIOR WRITTEN CONSENT. ANY REUSE WITHOUT WRITTEN CONSENT BY J-U-B WILL BE AT CLIENTS SOLE RISK AND WITHOUT LIABILITY OR LEGAL EXPOSURE TO J-U-B.

NO.	DESCRIPTION	BY	APR.	DATE

REVISION

BOSTWICK PARK CONSERVATION DISTRICT
WEST LATERAL PIPING PHASE 2 30% PLANS

PLAN AND PROFILE

FILE : 81-17-028_C-201X_WESTLAT PH2
JUB PROJ. # : 81-17-028
DRAWN BY: JMM/NJE
DESIGN BY: NJE
CHECKED BY: LDG
ONE INCH
AT FULL SIZE, IF NOT ONE INCH, SCALE ACCORDINGLY
LAST UPDATED: 9/19/2023

SHEET NUMBER:
C-204

Plot Date:9/19/2023 9:22 AM Plotted By: Corey Blubaum
Date Created:9/30/2021 \\JUB\CENTRAL\CLIENTS\CO\BOSTWICKPARK\PROJECTS\81-20-017_PL-566PLANE\DESIGN\WESTLATERAL\CAD\SHEET\PH2\CIVIL\81-17-028_C-201X_WESTLAT_PH2.DWG

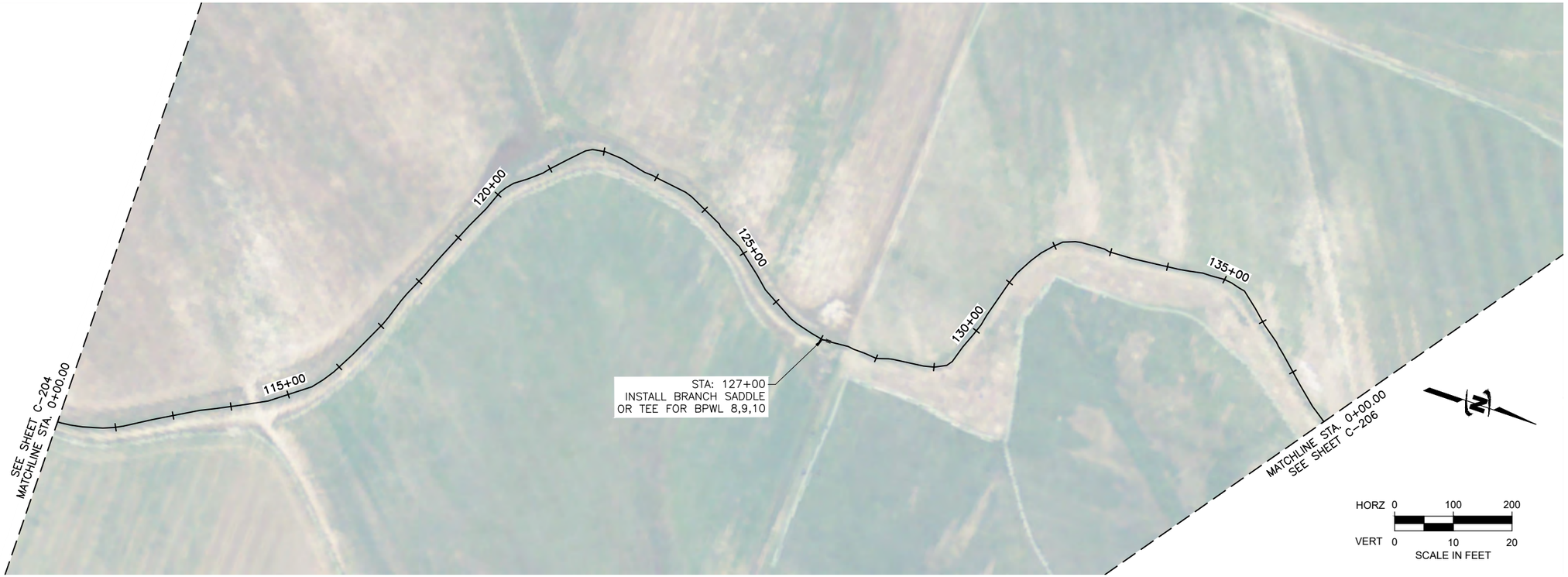

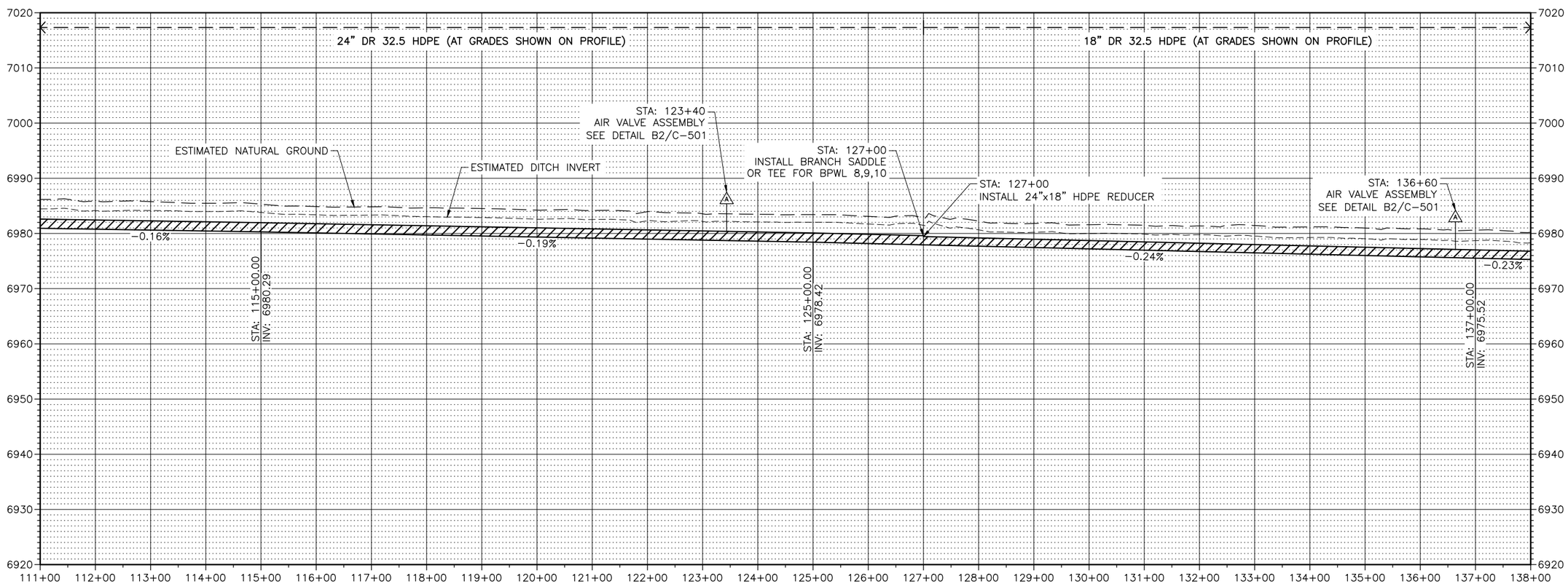

J-U-B ENGINEERS, INC.

J-U-B ENGINEERS, INC.
305 Main Street
Palisade, CO 81526
Phone: 970.208.8508
www.jub.com

PRELIMINARY PLANS

NOT FOR CONSTRUCTION

REUSE OF DRAWINGS

J-U-B SHALL RETAIN ALL COMMON LAW, STATUTORY, COPYRIGHT AND OTHER RESERVED RIGHTS OF THESE DRAWINGS, AND THE SAME SHALL NOT BE REUSED WITHOUT J-U-B'S PRIOR WRITTEN CONSENT. ANY REUSE WITHOUT WRITTEN CONSENT BY J-U-B WILL BE AT CLIENTS SOLE RISK AND WITHOUT LIABILITY OR LEGAL EXPOSURE TO J-U-B.

NO.	DESCRIPTION	BY	APR.	DATE

REVISION

BOSTWICK PARK CONSERVATION DISTRICT WEST LATERAL PIPING PHASE 2 30% PLANS

PLAN AND PROFILE

FILE : 81-17-028_C-201X_WESTLAT_PH2
JUB PROJ. # : 81-17-028
DRAWN BY: JMM/NJE
DESIGN BY: NJE
CHECKED BY: LDG
ONE INCH
AT FULL SIZE, IF NOT ONE INCH, SCALE ACCORDINGLY
LAST UPDATED: 9/19/2023

SHEET NUMBER:
C-205

Plot Date:9/19/2023 9:22 AM Plotted By: Corey Blubaum
Date Created:9/30/2021 \\JUB\CENTRAL\CLIENTS\CO\BOSTWICKPARK\PROJECTS\81-20-017_PL-566PLANE\DESIGN\WESTLATERAL\CAD\SHEET\PH2\CIVIL\81-17-028_C-201X_WESTLAT_PH2.DWG

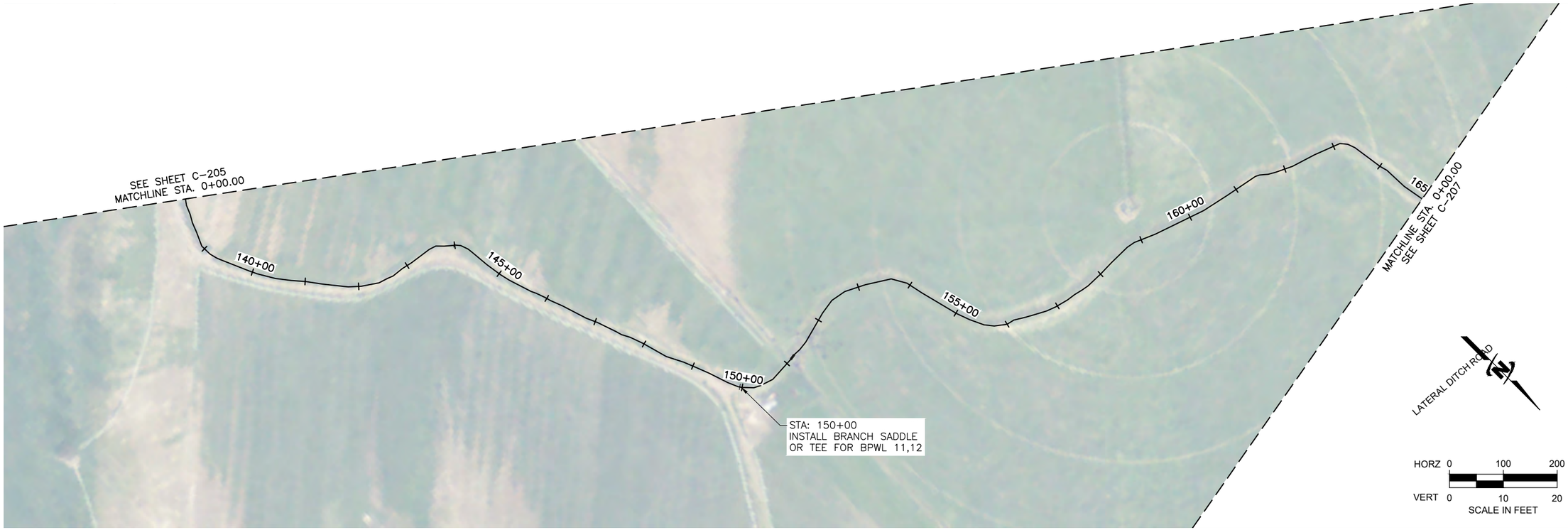

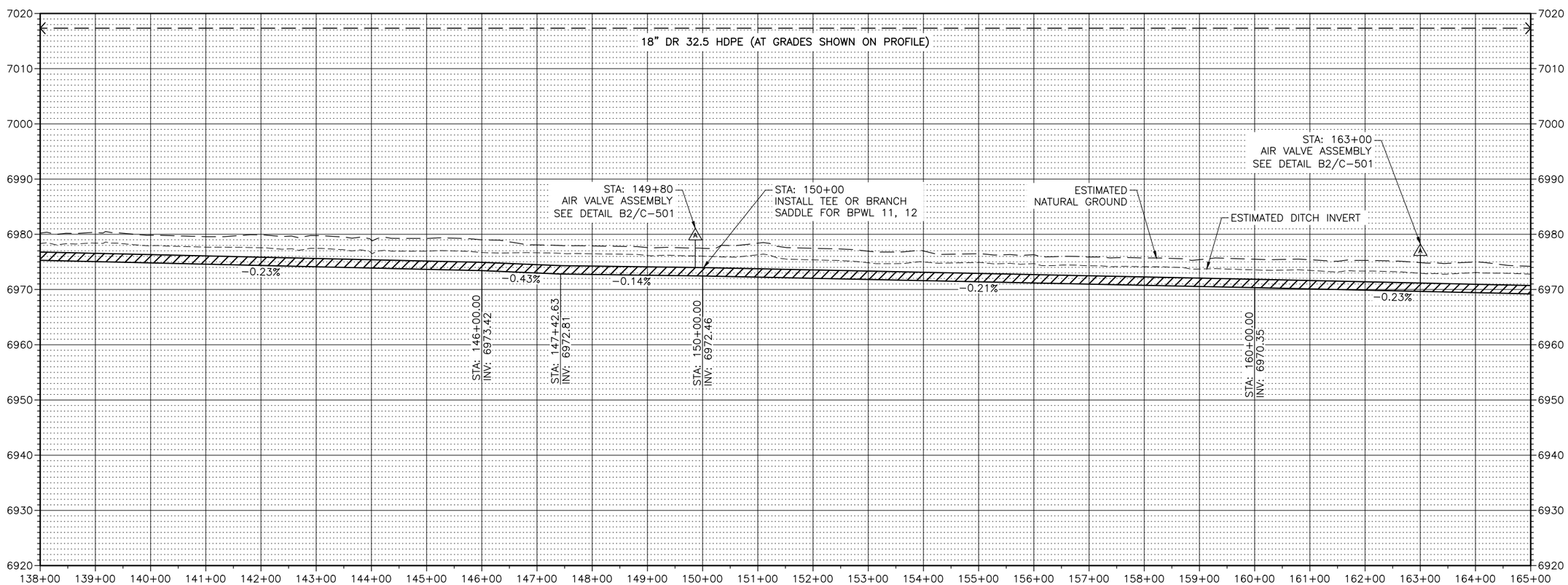

J-U-B ENGINEERS, INC.

J-U-B ENGINEERS, INC.
305 Main Street
Palisade, CO 81526
Phone: 970.208.8508
www.jub.com

PRELIMINARY PLANS

NOT FOR CONSTRUCTION

REUSE OF DRAWINGS
J-U-B SHALL RETAIN ALL COMMON LAW, STATUTORY, COPYRIGHT AND OTHER RESERVED RIGHTS OF THESE DRAWINGS, AND THE SAME SHALL NOT BE REUSED WITHOUT J-U-B'S PRIOR WRITTEN CONSENT. ANY REUSE WITHOUT WRITTEN CONSENT BY J-U-B WILL BE AT CLIENTS SOLE RISK AND WITHOUT LIABILITY OR LEGAL EXPOSURE TO J-U-B.

NO.	DESCRIPTION	BY	APR.	DATE

REVISION

BOSTWICK PARK CONSERVATION DISTRICT WEST LATERAL PIPING PHASE 2 30% PLANS

PLAN AND PROFILE

FILE : 81-17-028_C-201X_WESTLAT PH2
JUB PROJ. # : 81-17-028
DRAWN BY: JMM/NJE
DESIGN BY: NJE
CHECKED BY: LDG
ONE INCH
AT FULL SIZE, IF NOT ONE INCH, SCALE ACCORDINGLY
LAST UPDATED: 9/19/2023

SHEET NUMBER:
C-206

Plot Date:9/19/2023 9:22 AM Plotted By: Corey Blubaum
Date Created:9/30/2021 \\JUB\CENTRAL\CLIENTS\CO\BOSTWICKPARK\PROJECTS\81-20-017_PL-566PLANE\DESIGN\WEST_LATERAL\CAD\SHEET\PH2\CIVIL\81-17-028_C-201X_WESTLAT_PH2.DWG

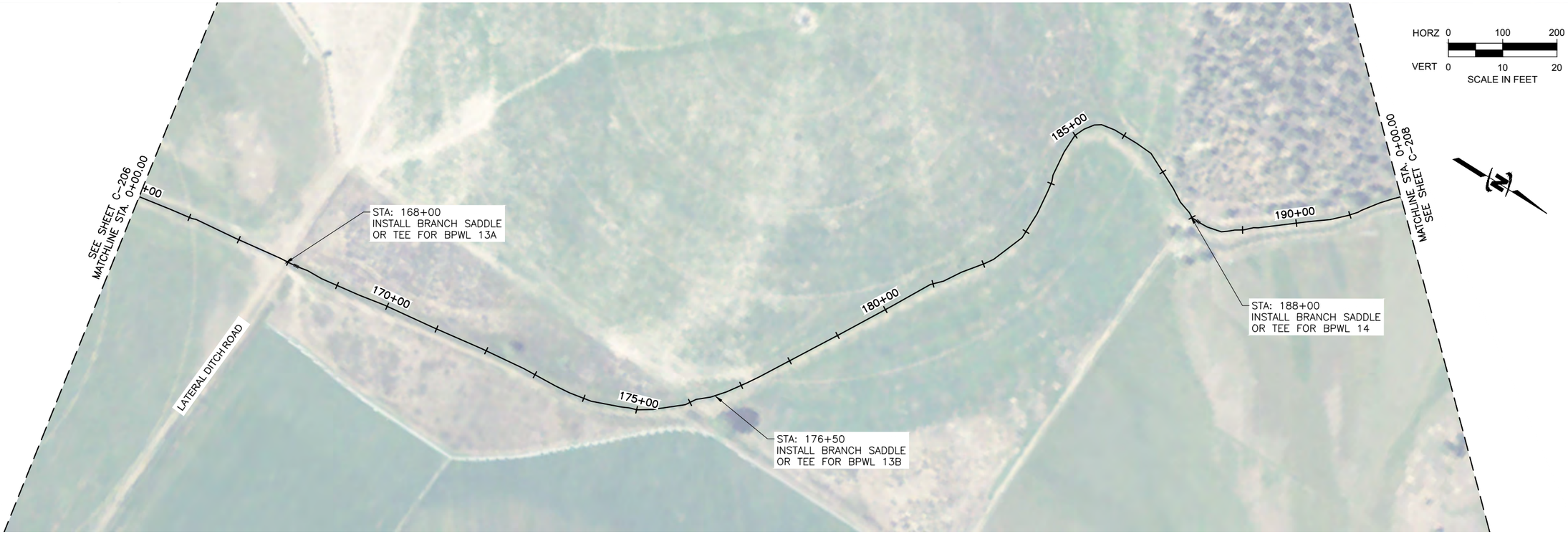

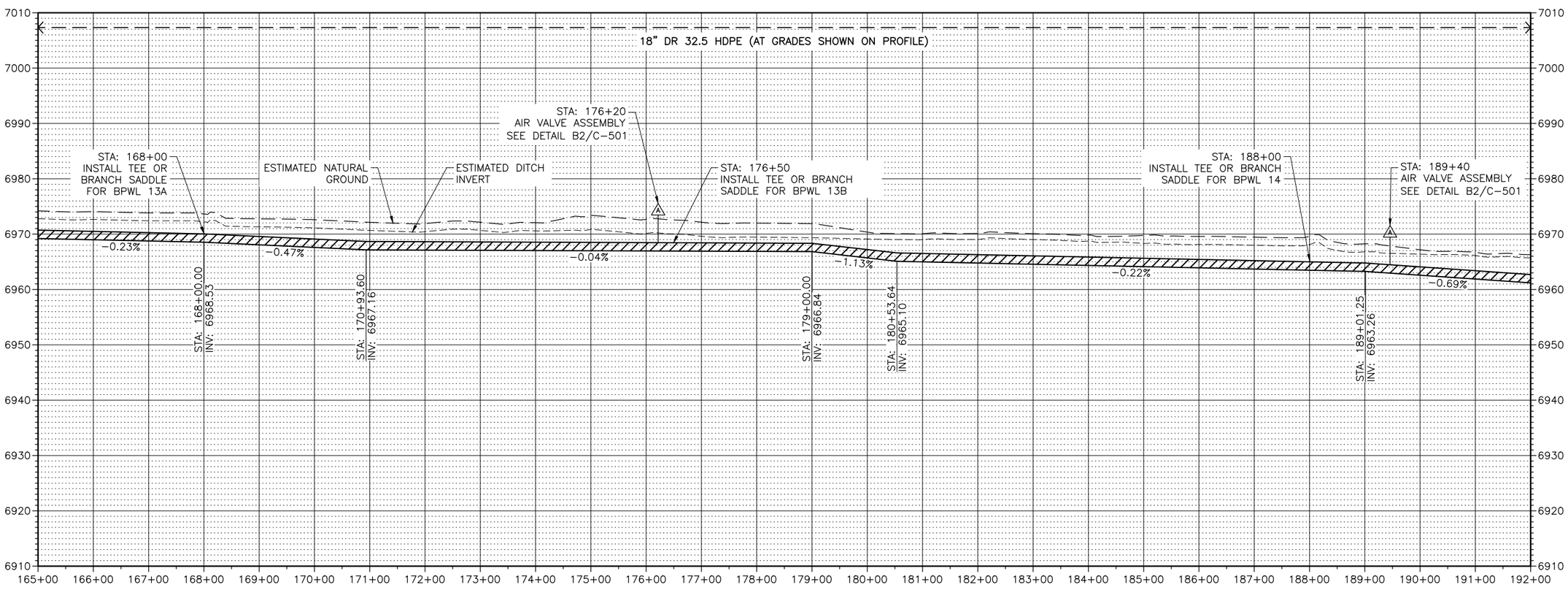

J-U-B ENGINEERS, INC.
305 Main Street
Palisade, CO 81526
Phone: 970.208.8508
www.jub.com

PRELIMINARY PLANS

NOT FOR CONSTRUCTION

REUSE OF DRAWINGS
J-U-B SHALL RETAIN ALL COMMON LAW, STATUTORY, COPYRIGHT AND OTHER RESERVED RIGHTS OF THESE DRAWINGS, AND THE SAME SHALL NOT BE REUSED WITHOUT J-U-B'S PRIOR WRITTEN CONSENT. ANY REUSE WITHOUT WRITTEN CONSENT BY J-U-B WILL BE AT CLIENTS SOLE RISK AND WITHOUT LIABILITY OR LEGAL EXPOSURE TO J-U-B.

NO.	DESCRIPTION	BY	APR.	DATE

REVISION

BOSTWICK PARK CONSERVATION DISTRICT
WEST LATERAL PIPING PHASE 2 30% PLANS

PLAN AND PROFILE

FILE : 81-17-028_C-201X_WESTLAT_PH2
JUB PROJ. # : 81-17-028
DRAWN BY: JMM/NJE
DESIGN BY: NJE
CHECKED BY: LDG
ONE INCH
AT FULL SIZE, IF NOT ONE INCH, SCALE ACCORDINGLY
LAST UPDATED: 9/19/2023

SHEET NUMBER:
C-207

Plot Date:9/19/2023 9:22 AM Plotted By: Corey Blubaum
Date Created:9/30/2021 \\JUB\CENTRAL\CLIENTS\CO\BOSTWICKPARK\PROJECTS\81-20-017_PL-566\PLANE\DESIGN\WESTLATERAL\CAD\SHEET\PH2\CIVIL\81-17-028_C-201X_WESTLAT_PH2.DWG

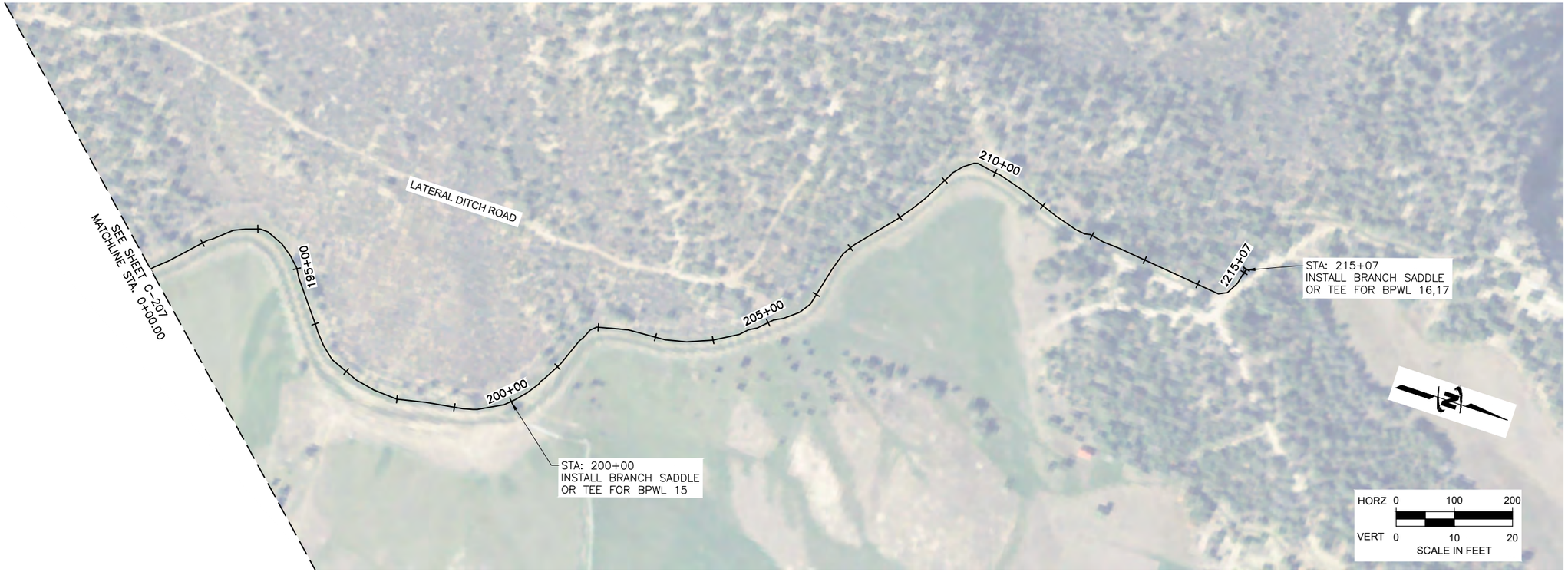

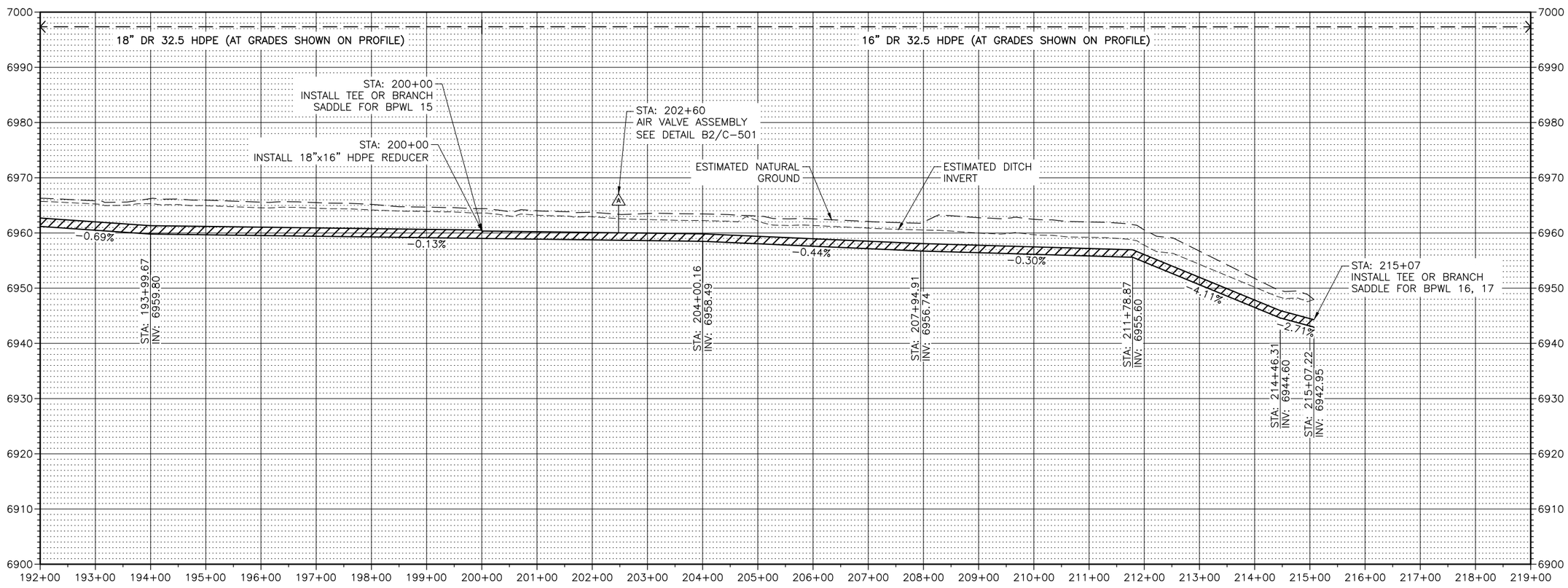

Plot Date:9/19/2023 9:22 AM Plotted By: Corey Blubaum
Date Created:9/30/2021 \\JUB\CENTRAL\CLIENTS\CO\BOSTWICKPARK\PROJECTS\81-20-017_PL-565PLANE\DESIGN\WESTLATERAL\CAD\SHEET\PH2\CIVIL\81-17-028_C-201X_WESTLAT_PH2.DWG

J-U-B ENGINEERS, INC.

J-U-B ENGINEERS, INC.
305 Main Street
Palisade, CO 81526
Phone: 970.208.8508
www.jub.com

PRELIMINARY PLANS

NOT FOR CONSTRUCTION

REUSE OF DRAWINGS
J-U-B SHALL RETAIN ALL COMMON LAW, STATUTORY, COPYRIGHT AND OTHER RESERVED RIGHTS OF THESE DRAWINGS, AND THE SAME SHALL NOT BE REUSED WITHOUT J-U-B'S PRIOR WRITTEN CONSENT. ANY REUSE WITHOUT WRITTEN CONSENT BY J-U-B WILL BE AT CLIENTS SOLE RISK AND WITHOUT LIABILITY OR LEGAL EXPOSURE TO J-U-B.

NO.	DESCRIPTION	BY	APR.	DATE
	REVISION			

BOSTWICK PARK CONSERVATION DISTRICT
WEST LATERAL PIPING PHASE 2 30% PLANS

PLAN AND PROFILE

FILE : 81-17-028_C-201X_WESTLAT_PH2
JUB PROJ. # : 81-17-028
DRAWN BY: JMM/NJE
DESIGN BY: NJE
CHECKED BY: LDG
ONE INCH
AT FULL SIZE, IF NOT ONE INCH, SCALE ACCORDINGLY
LAST UPDATED: 9/19/2023

SHEET NUMBER:
C-208

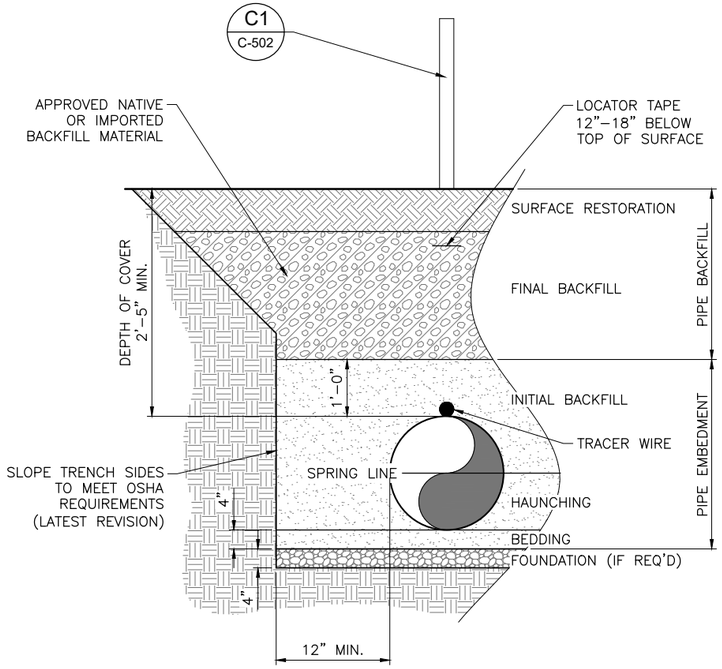

B1 TRENCH EXCAVATION AND BACKFILL
SCALE:N.T.S.

TRENCH BACKFILL NOTES:

1. SURFACE RESTORATION:
   A. USE APPROVED NATIVE OR IMPORTED BACKFILL MATERIAL PER SPEC SECTION 02324.
2. FINAL BACKFILL:
   A. 85% COMPACTION TYPICAL.
   B. 95% COMPACTION IN ROAD RIGHT–OF–WAY AND DRIVE WAYS.
   C. USE ASTM D 1557 MODIFIED PROCTOR FOR COUNTY ROADWAYS.
   D. USE ASTM D 695 STANDARD PROCTOR FOR ALL OTHER AREAS.
   E. SUBSOIL TYPE S1, ONSITE BACKFILL TYPE A2, IMPORTED GRANULAR FILL TYPE A1.
   F. INSTALL MAGNETIC LOCATOR TAPE 12"–18" BELOW FINISHED SURFACE. CENTER TAPE IN TRENCH.
3. EMBEDMENT:
   A. ONSITE EMBEDMENT TYPE A4, IMPORTED EMBEDMENT TYPE A3. LIMIT PARTICLE SIZE TO 1".
   B. INITIAL BACKFILL:
      B.1. 90% COMPACTION
      B.2. FILL VOIDS BETWEEN PIPE AND TRENCH SIDES.
      B.3. USE HAND HELD OR WALK BEHIND COMPACTION EQUIPMENT TO PROTECT PIPE.
      B.4. LIFT THICKNESS: MAX. 8" UNCOMPACTED.
   C. HAUNCHING:
      C.1. 90% COMPACTION
      C.2. SHOVEL–SLICE AND MANUAL TAMP EMBEDMENT MATERIAL TO ASSURE ALL VOIDS BETWEEN THE PIPE AND THE TRENCH BOTTOM AND SIDES ARE FILLED.
      C.3. COMPACT MATERIAL TO PROVIDE COMPLETE CONTACT WITH PIPE BOTTOM.
   D. BEDDING:
      D.1. LEVEL EMBEDMENT MATERIAL OR APPROVED UNDISTURBED NATIVE MATERIAL TO PROVIDE CONTINUOUS FIRM SUPPORT ALONG FULL LENGTH OF PIPE. HIGH SPOTS SHOULD BE SHAVED OFF AND LOW SPOTS FILLED WITH WELL TAMPED SOIL. EXCAVATE A BELL HOLE, IF NECESSARY, TO ASSURE NO UNDUE WEIGHT IS PLACED ON BELL AND THAT THE PIPE BARREL IS SUPPORTED.
4. FOUNDATION:
   A. NATIVE OR IMPORTED FOUNDATION TYPE A5, AS DIRECTED BY ENGINEER.
   B. USE FOUNDATION MATERIAL AS REQUIRED TO PROVIDE STRUCTURAL SUPPORT FOR PIPE.

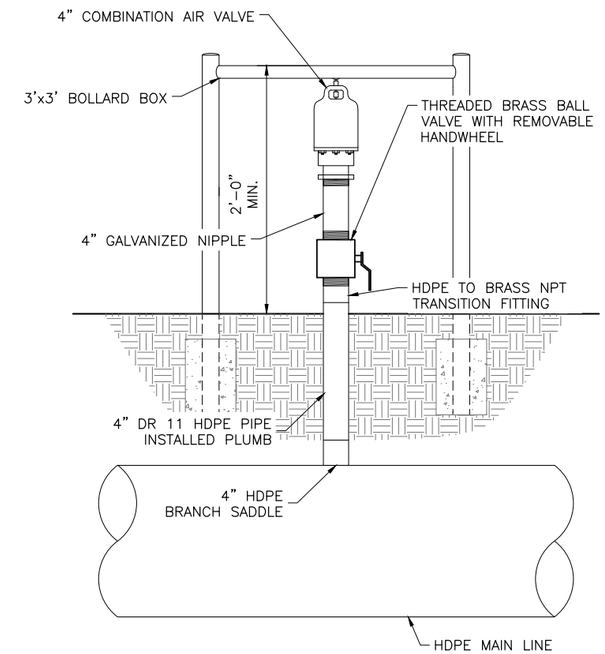

B2 AIR VALVE ASSEMBLY
SCALE:N.T.S.

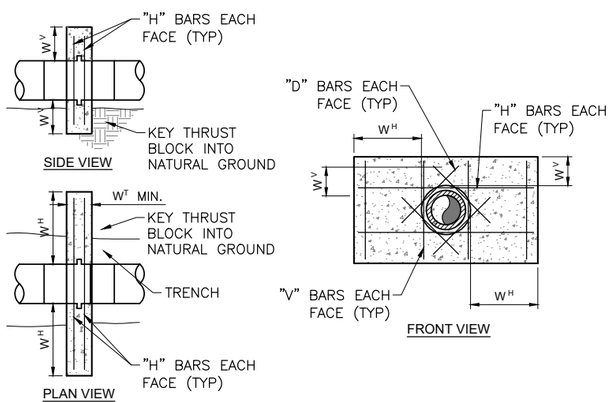

THRUST BLOCK DIMENSIONS									
PIPE SIZE	W^H	W^V	W^T	"H" BARS		"V" BARS		"D" BARS	
				SIZE	NO.	SIZE	NO.	SIZE	NO.
4"–8"	1.5'	0.5'	1.0'	#4	2	#4	4	#4	4
10"–12"	1.5'	1.0'	1.0'	#4	4	#4	4	#4	4
14"–20"	2.0'	1.0'	1.0'	#4	4	#4	6	#4	4
22"–24"	2.5'	1.0'	1.0'	#4	4	#4	6	#4	4
30"	2.75'	1.5'	2.0'	#5	6	#5	8	#5	4
32"	2.75'	1.75'	2.0'	#5	8	#5	8	#5	4
34"	2.75'	2.0'	2.0'	#5	8	#5	8	#5	4
36"	3.0'	2.0'	2.0'	#5	8	#5	8	#5	4

D1 INLINE THRUST BLOCK DIMENSIONS MAINLINE
SCALE:N.T.S.

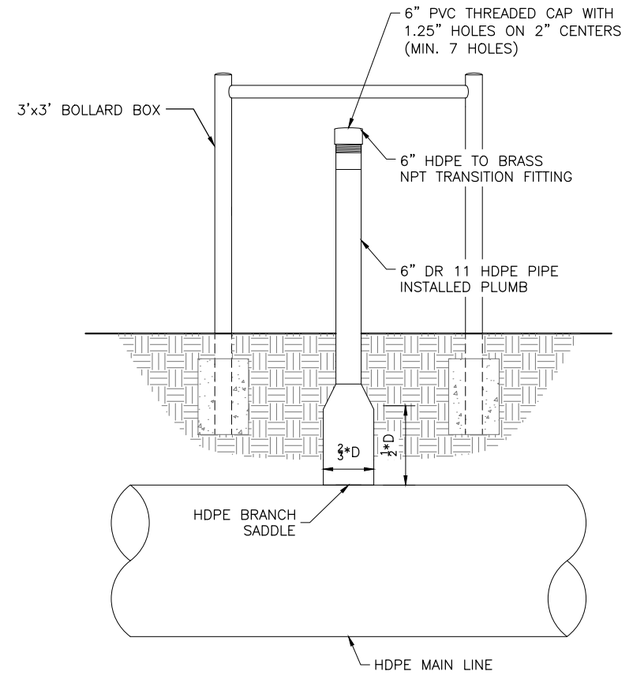

D2 OPEN AIR VENT
SCALE:N.T.S.

NOTES:
1. SERVICES TO DRAIN BACK TO MAINLINE.
2. USE BENDS DOWNSTREAM OF METER TO ELEVATE OUTLET 8" TO 12" ABOVE METER ELEVATION TO ENSURE DRAINAGE TO MAINLINE.
3. PRESSURE DISSIPATION MANHOLES WILL REQUIRE DRAIN LINES
4. DIMENSIONS AND EXACT LAYOUTS OF TURNOUTS TO BE EVALUATED ON INDIVIDUAL BASIS

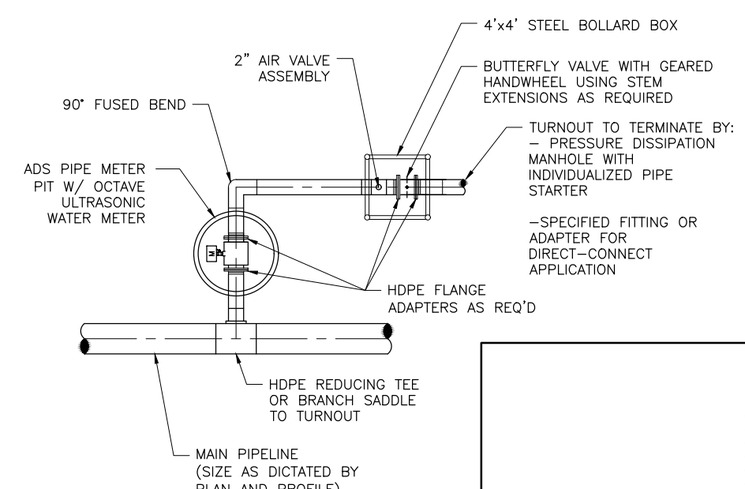

D3 TYPICAL PRESSURIZED TURNOUT CONFIGURATION
SCALE: N.T.S.

J-U-B ENGINEERS, INC.
J-U-B ENGINEERS, INC.
305 South Main Street
Unit 6
Palisade, CO 84526
Phone: 907.208.8508
www.jub.com

PRELIMINARY PLANS

NOT FOR CONSTRUCTION

REUSE OF DRAWINGS
THIS DOCUMENT, AND THE IDEAS AND DESIGNS INCORPORATED HEREIN, AS AN INSTRUMENT OF PROFESSIONAL SERVICE, IS THE PROPERTY OF J-U-B ENGINEERS, Inc. AND IS NOT TO BE USED, IN WHOLE OR PART, FOR ANY OTHER PROJECT WITHOUT THE EXPRESS WRITTEN AUTHORIZATION OF J-U-B ENGINEERS, Inc.

REVISION		
NO.	DESCRIPTION	BY APR. DATE
1	PRV VAULT, EARLY TERM OF PIPE	NJE LDG 9/18

BOSTWICK PARK CONSERVATION DISTRICT
WEST LATERAL PIPING PHASE 2 30% PLANS

DETAILS

FILE : 81-16-001_C-501X_WESTLAT_PH2
JUB PROJ. # : 81-17-028
DRAWN BY: JMM/NJE
DESIGN BY: NJE
CHECKED BY: LDG
ONE INCH
AT FULL SIZE, IF NOT ONE INCH, SCALE ACCORDINGLY
LAST UPDATED: 6/11/2021

SHEET NUMBER:
C-501

Plot Date:9/19/2023 9:22 AM Printed By: Corey Bubaum
Date Created:6/11/2021 \\JUB\CENTRAL\CLIENTS\CO\BOSTWICKPARK\PROJECTS\81-20-017_PL_566\PLANA\DESIGN\WESTLATERAL\CAD\SHEET\PH2\CIVIL\81-16-001_C-501X_WESTLAT_PH2.DWG

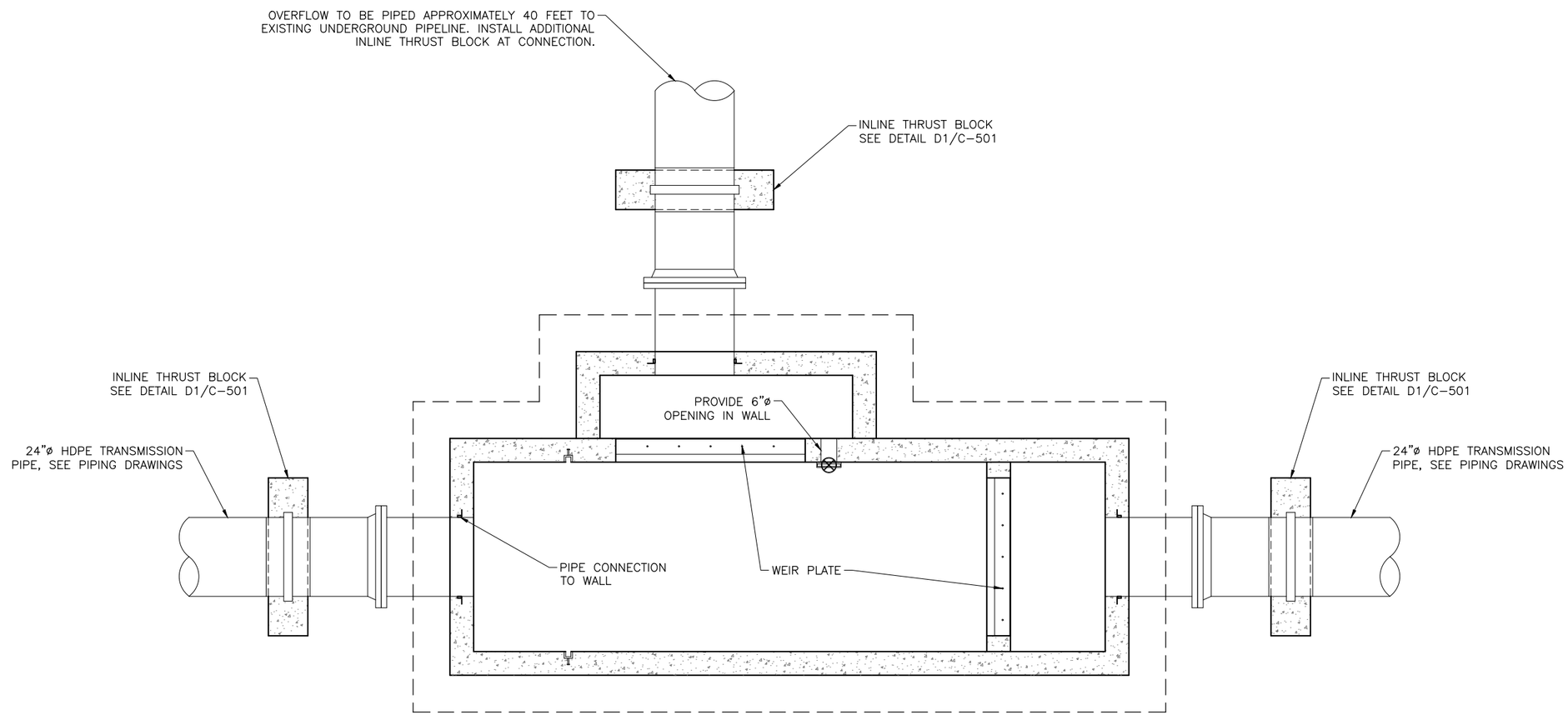

B1 INTAKE STRUCTURE FOUNDATION PLAN
SCALE: 1/2" = 1'-0"

Plot Date:9/19/2023 9:22 AM Plotted By: Corey Blabaum
Date Created:6/11/2021 \\JUB/CENTRAL\CLIENTS\CO\BOSTWICKPARK\PROJECTS\81-20-017_PL-566PLANE\DESIGN\WESTLATERAL\CAD\SHEETS\PH2\CIVIL\81-16-001_C-501X_WESTLAT_PH2.DWG

J-U-B ENGINEERS, INC.

J-U-B ENGINEERS, INC.
305 South Main Street
Unit 6
Palisade, CO 84526
Phone: 907.208.8508
www.jub.com

PRELIMINARY PLANS

NOT FOR CONSTRUCTION

REUSE OF DRAWINGS
THIS DOCUMENT, AND THE IDEAS AND DESIGNS INCORPORATED HEREIN, AS AN INSTRUMENT OF PROFESSIONAL SERVICE, IS THE PROPERTY OF **J-U-B ENGINEERS, Inc.** AND IS NOT TO BE USED, IN WHOLE OR PART, FOR ANY OTHER PROJECT WITHOUT THE EXPRESS WRITTEN AUTHORIZATION OF **J-U-B ENGINEERS, Inc.**

REVISION			
NO.	DESCRIPTION	BY	APR. DATE
1	PRV VAULT, EARLY TERM OF PIPE	NJE	LDG 9/18

BOSTWICK PARK CONSERVATION DISTRICT
WEST LATERAL PIPING PHASE 2 30% PLANS

DETAILS

FILE : 81-16-001_C-501X_WESTLAT_PH2
JUB PROJ. # : 81-20-017
DRAWN BY: JMM/NJE
DESIGN BY: NJE
CHECKED BY: LDG
ONE INCH
AT FULL SIZE, IF NOT ONE INCH, SCALE ACCORDINGLY
LAST UPDATED: 6/11/2021

SHEET NUMBER:
C-502

UNCOMPAHGRE VALLEY WATER USERS ASSOCIATION

M&D CANAL
30% DESIGN

September 2023

PRELIMINARY PLANS NOT FOR CONSTRUCTION

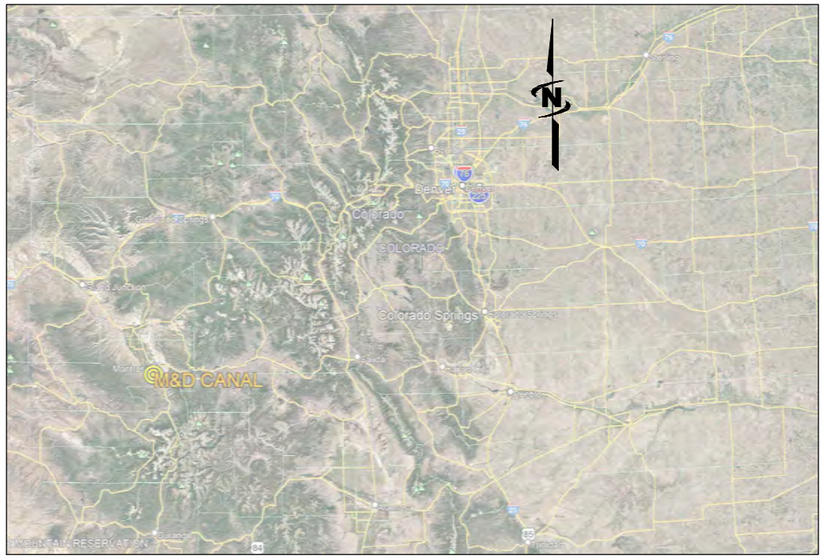

AREA MAP

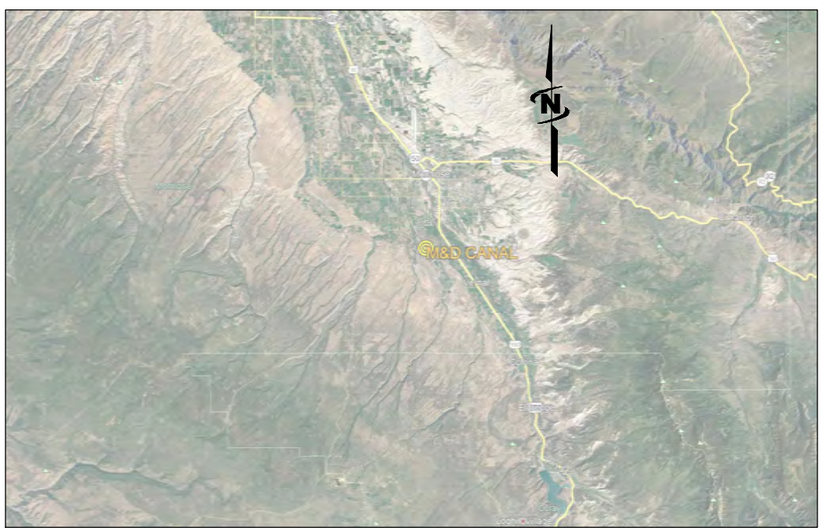

VICINITY MAP

PROJECT NO. 81-20-017

J-U-B ENGINEERS, INC.

305 Main Street, Palisade, CO 81526
p 970 208 8508 w www.jub.com

THE LANGDON GROUP

GATEWAY MAPPING INC.

J-U-B FAMILY OF COMPANIES

REUSE OF DOCUMENTS

J-U-B grants to CLIENT a nonexclusive, non-transferable license to use the Drawings, Specifications and/or Contract Documents (Documents) as follows:

CLIENT may make and retain copies of the Documents for reference, but J-U-B shall retain all common law, statutory and other reserved rights, including the copyright thereto, and the same shall not be reused on this Project or any other Project without J-U-B's prior written consent. Distribution of Documents to meet regulatory or permitting requirements, or for similar purposes, in connection with the Project, including but not limited to distribution to contractors or subcontractors for the performance of their work, is not to be construed as publication adversely affecting the reserved rights of J-U-B. The Documents are not intended for use in creating dtm for grading or earthwork, survey staking layout (unless specifically identified as such in the documents), or property boundary layouts.

Any reuse without written consent by J-U-B, or without verification or adoption by J-U-B for the specific purpose intended by the reuse, will be at CLIENT's sole risk and without liability or legal exposure to J-U-B. The CLIENT shall release, defend, indemnify, and hold J-U-B harmless from any claims, damages, actions or causes of action, losses, and expenses, including reasonable attorneys' and expert fees, arising out of or resulting from such reuse.

If the Documents are provided in electronic format, the electronic documents are subject to the provisions of J-U-B's "electronic document/data limited license" found at edocs.jub.com

LAST UPDATED: 9/18/2023

SHEET NUMBER:

G-001

Plot Date:9/18/2023 \\JUB\CENTRAL\CLIENTS\CO\BOSTWICKPARK\PROJECTS\81-20-017_PL-566PLANEA\DESIGN\M&DCANAL\CAD\SHEET\81-20-017_G_00X.DWG

Plot Date:9/18/2023 3:59 PM Plotted By: Corey Blubaum
Date Created:8/18/2022 \\JUB\CENTRAL\CLIENTS\CO\BOSTWICKPARK\PROJECTS\81-20-017_PL-566PLANEA\DESIGN\M&DCANAL\CAD\SHEET\81-20-017_C_101.DWG

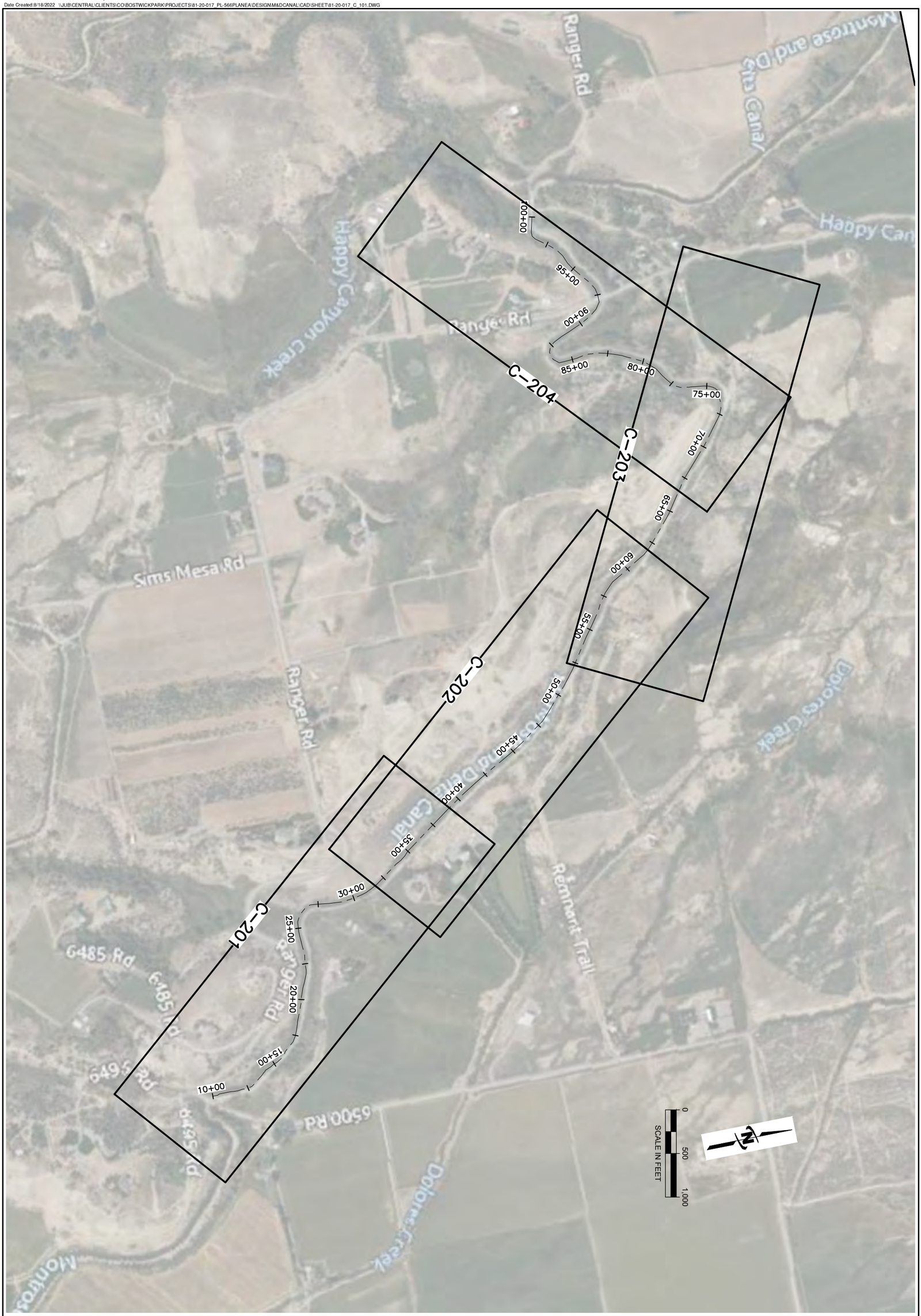

SHEET NUMBER: C-101	M&D CANAL CANAL LINING AND HILL STABILIZATION UNCOMPAHGRE VALLEY WATER USERS ASSOCIATION	**REUSE OF DRAWINGS** J-U-B SHALL RETAIN ALL COMMON LAW, STATUTORY, COPYRIGHT AND OTHER RESERVED RIGHTS OF THESE DRAWINGS, AND THE SAME SHALL NOT BE REUSED WITHOUT J-U-B'S PRIOR WRITTEN CONSENT. ANY REUSE WITHOUT WRITTEN CONSENT BY J-U-B WILL BE AT CLIENT'S SOLE RISK AND WITHOUT LIABILITY OR LEGAL EXPOSURE TO J-U-B.	PRELIMINARY PLANS
	ALIGNMENT	REVISION NO. / DESCRIPTION / BY / APR. / DATE	NOT FOR CONSTRUCTION

FILE: 81-20-017 C-101
JUB PROJ. #: 81-20-017
DRAWN BY: DTF
CHECKED BY: NJE
ONE INCH
AT FULL SIZE, IF NOT ONE INCH, SCALE ACCORDINGLY
LAST UPDATED: 9/18/2023

J-U-B ENGINEERS, INC.
305 S. Main Street
Unit 6
Palisade, CO 81526
Phone: 970.208.8508
www.jub.com

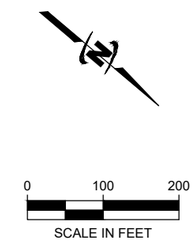

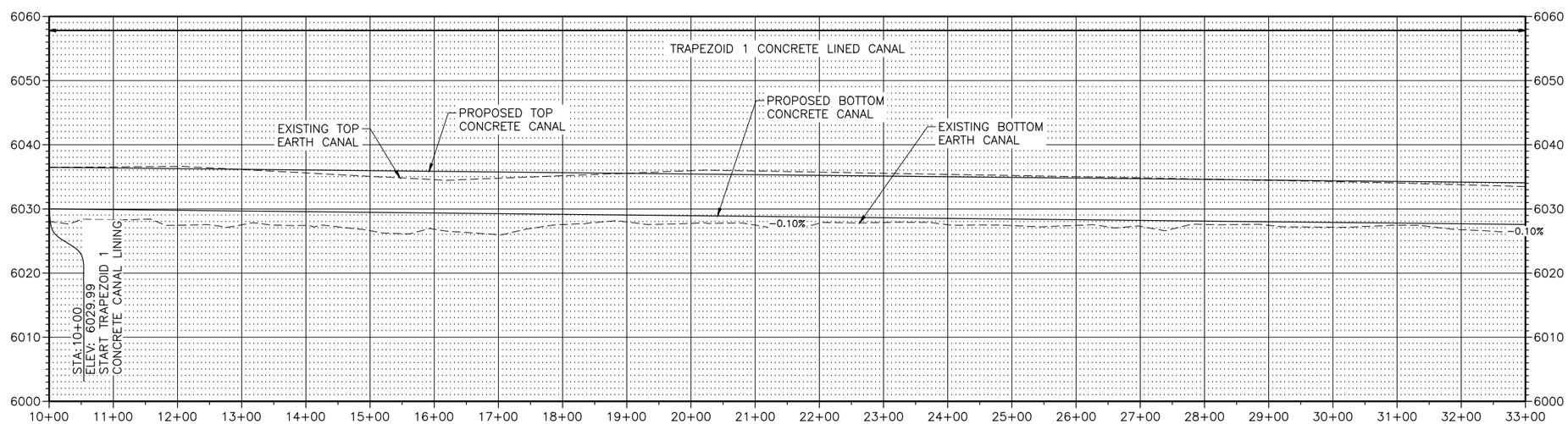

J-U-B ENGINEERS, INC.

J-U-B ENGINEERS, INC.
305 S. Main Street
Unit 6
Palisade, CO 81526
Phone: 970.208.8508
www.jub.com

PRELIMINARY PLANS

NOT FOR CONSTRUCTION

REUSE OF DRAWINGS
J-U-B SHALL RETAIN ALL COMMON LAW, STATUTORY, COPYRIGHT AND OTHER RESERVED RIGHTS OF THESE DRAWINGS, AND THE SAME SHALL NOT BE REUSED WITHOUT J-U-B'S PRIOR WRITTEN CONSENT. ANY REUSE WITHOUT WRITTEN CONSENT BY J-U-B WILL BE AT CLIENTS SOLE RISK AND WITHOUT LIABILITY OR LEGAL EXPOSURE TO J-U-B.

REVISION

NO.	DESCRIPTION	BY	APR.	DATE

M&D CANAL CANAL LINING AND HILL STABILIZATION
UNCOMPAHGRE VALLEY WATER USERS ASSOCIATION

PLAN AND PROFILE

FILE : 81-20-017_C_201
JUB PROJ. # : 81-20-017
DRAWN BY: DTF / RW
DESIGN BY: RW / NE
CHECKED BY: ----

ONE INCH
AT FULL SIZE, IF NOT ONE INCH, SCALE ACCORDINGLY

LAST UPDATED: 9/18/2023

SHEET NUMBER:

C-201

Plot Date:9/18/2023 3:59 PM Plotted By: Corey Blubaum
Date Created:10/18/2021 \\JUB\CENTRAL\CLIENTS\CO\BOSTWICKPARK\PROJECTS\81-20-017_PL-566\PLANE\DESIGN\M&D\CANAL\CAD\SHEETS\81-20-017_C_201.DWG

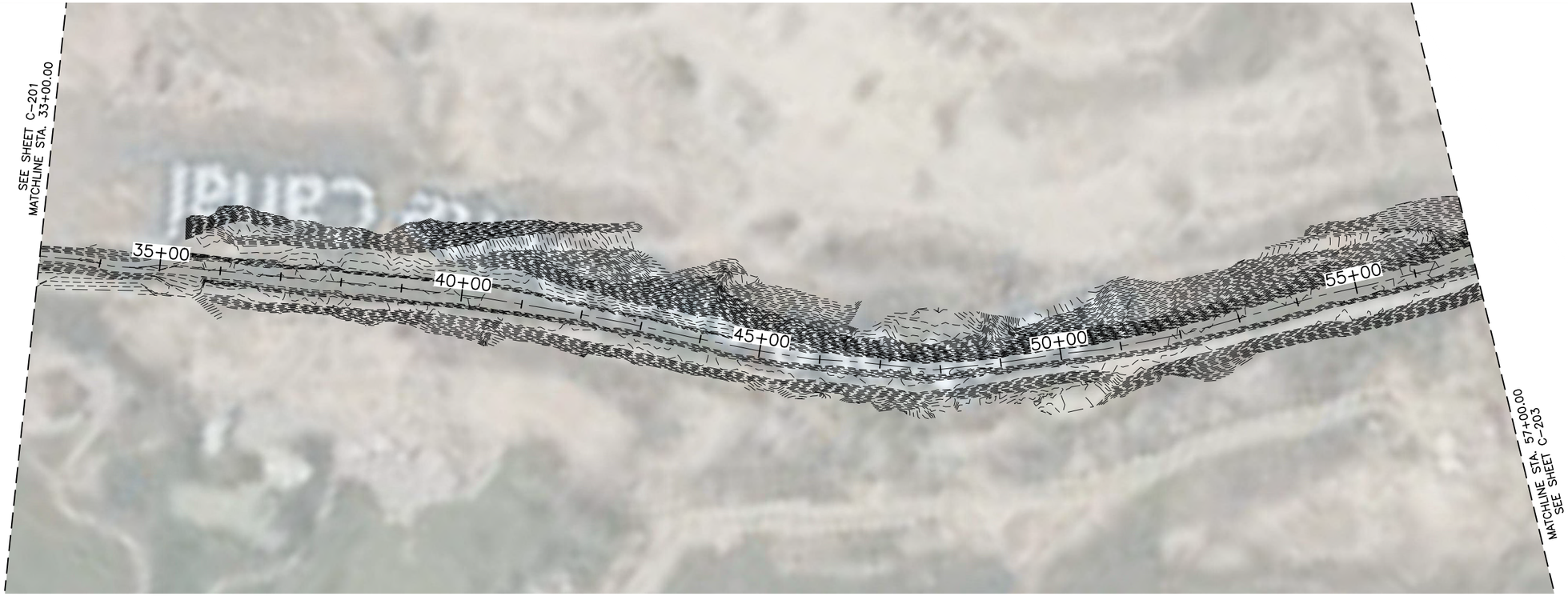

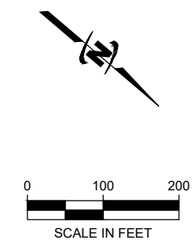

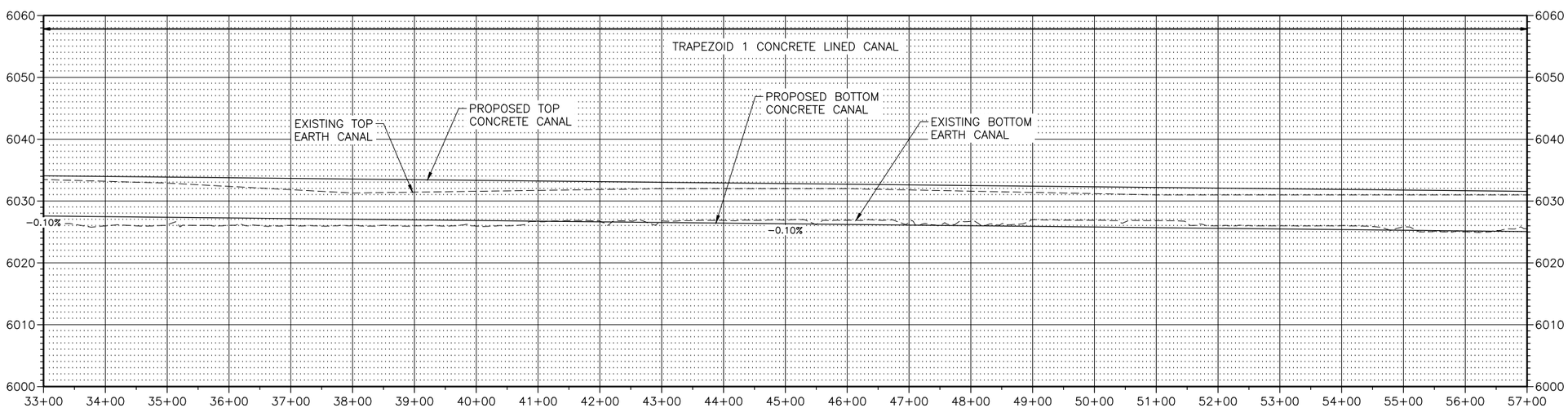

J-U-B ENGINEERS, INC.

J-U-B ENGINEERS, INC.
305 S. Main Street
Unit 6
Palisade, CO 81526
Phone: 970.208.8508
www.jub.com

PRELIMINARY PLANS

NOT FOR CONSTRUCTION

REUSE OF DRAWINGS
J-U-B SHALL RETAIN ALL COMMON LAW, STATUTORY, COPYRIGHT AND OTHER RESERVED RIGHTS OF THESE DRAWINGS, AND THE SAME SHALL NOT BE REUSED WITHOUT J-U-B'S PRIOR WRITTEN CONSENT. ANY REUSE WITHOUT WRITTEN CONSENT BY J-U-B WILL BE AT CLIENTS SOLE RISK AND WITHOUT LIABILITY OR LEGAL EXPOSURE TO J-U-B.

REVISION

NO.	DESCRIPTION	BY	APR.	DATE

M&D CANAL CANAL LINING AND HILL STABILIZATION
UNCOMPAHGRE VALLEY WATER USERS ASSOCIATION

PLAN AND PROFILE

FILE : 81-20-017_C_201
JUB PROJ. # : 81-20-017
DRAWN BY: ----
DESIGN BY: ----
CHECKED BY: ----

ONE INCH
AT FULL SIZE, IF NOT ONE INCH, SCALE ACCORDINGLY

LAST UPDATED: 9/18/2023

SHEET NUMBER:
C-202

Plot Date:9/18/2023 3:59 PM Plotted By: Corey Blubaum
Date Created:10/18/2021 \\JUB\CENTRAL\CLIENTS\CO\BOSTWICKPARK\PROJECTS\81-20-017_PL-566\PLANE\DESIGN\M&DCANAL\CAD\SHEETS\81-20-017_C_201.DWG

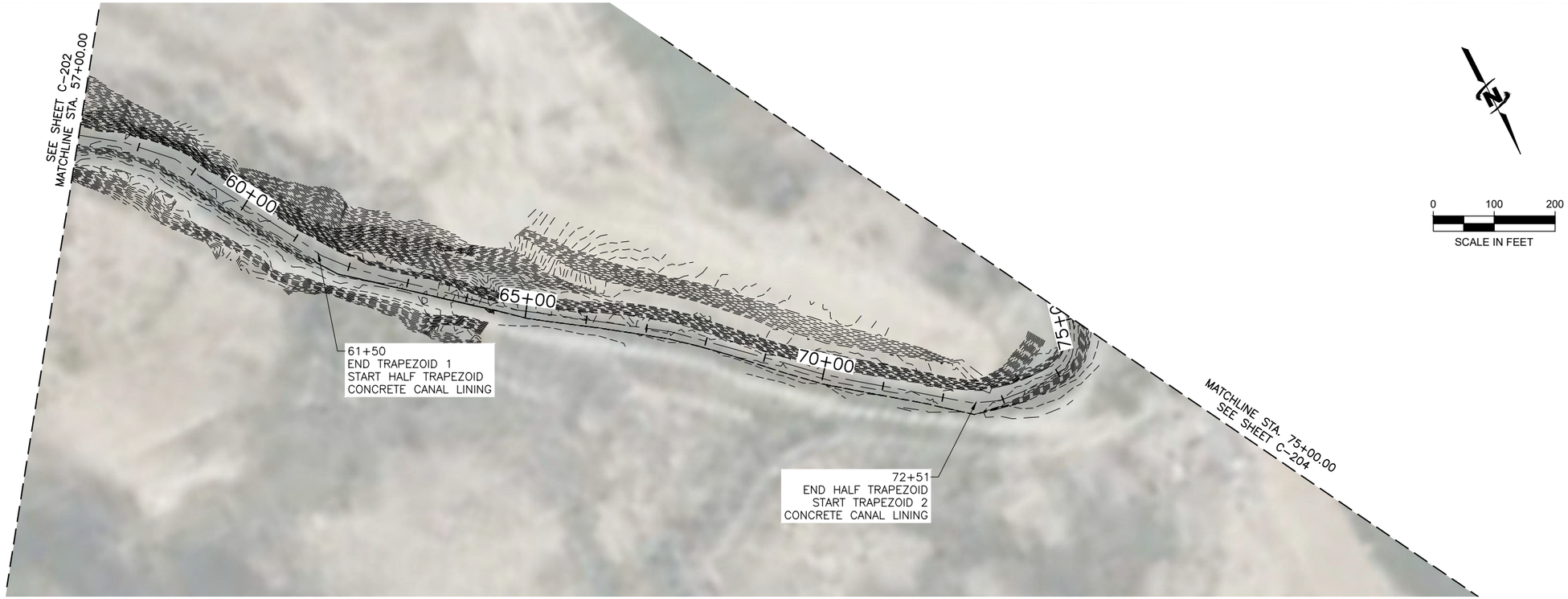

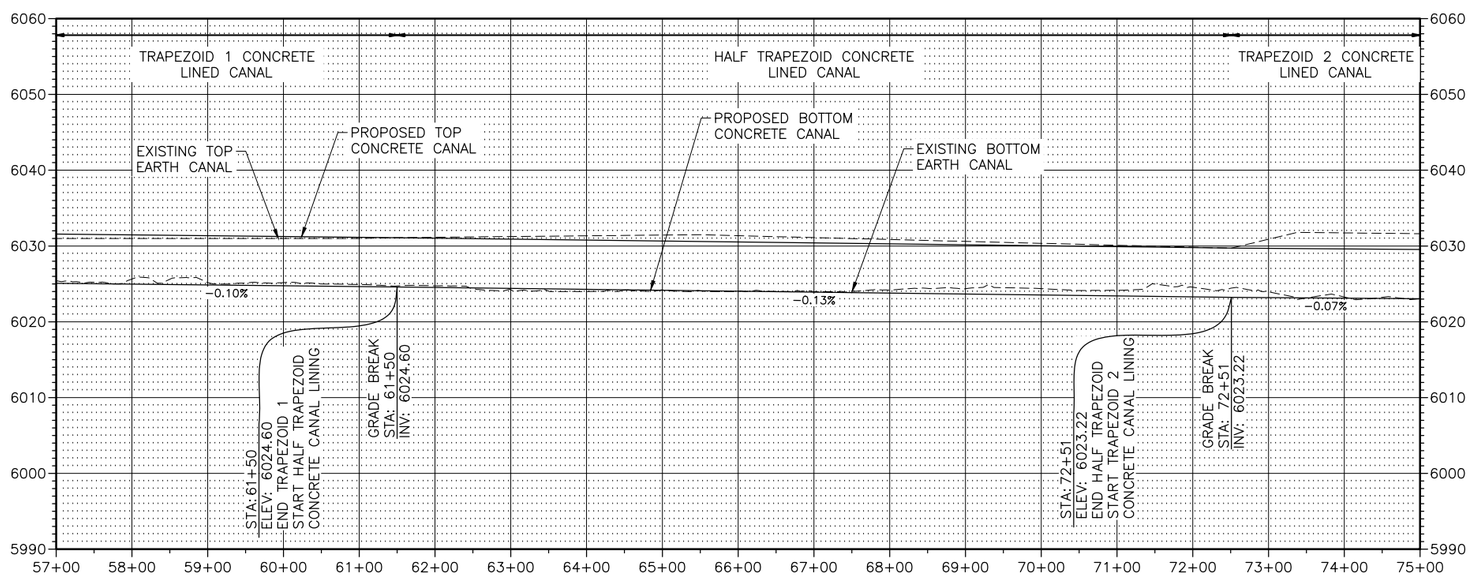

Plot Date:9/18/2023 3:59 PM Plotted By: Corey Blubaum
Date Created:10/18/2021 \\JUBCENTRAL\CLIENTS\CO\BOSWICKPARK\PROJECTS\81-20-017_PL-566\PLANE\DESIGN\M&DCANAL\CAD\SHEETS\81-20-017_C_201.DWG

J-U-B ENGINEERS, INC.

J-U-B ENGINEERS, INC.
305 S. Main Street
Unit 6
Palisade, CO 81526
Phone: 970.208.8508
www.jub.com

PRELIMINARY PLANS

NOT FOR CONSTRUCTION

REUSE OF DRAWINGS:
J-U-B SHALL RETAIN ALL COMMON LAW, STATUTORY, COPYRIGHT AND OTHER RESERVED RIGHTS OF THESE DRAWINGS, AND THE SAME SHALL NOT BE REUSED WITHOUT J-U-B'S PRIOR WRITTEN CONSENT. ANY REUSE WITHOUT WRITTEN CONSENT BY J-U-B WILL BE AT CLIENTS SOLE RISK AND WITHOUT LIABILITY OR LEGAL EXPOSURE TO J-U-B.

REVISION

NO.	DESCRIPTION	BY	APR.	DATE

M&D CANAL CANAL LINING AND HILL STABILIZATION
UNCOMPAHGRE VALLEY WATER USERS ASSOCIATION

PLAN AND PROFILE

FILE : 81-20-017_C_201
JUB PROJ. # : 81-20-017
DRAWN BY: ----
DESIGN BY: ----
CHECKED BY: ----

ONE INCH
AT FULL SIZE, IF NOT ONE INCH, SCALE ACCORDINGLY

LAST UPDATED: 9/18/2023

SHEET NUMBER:

C-203

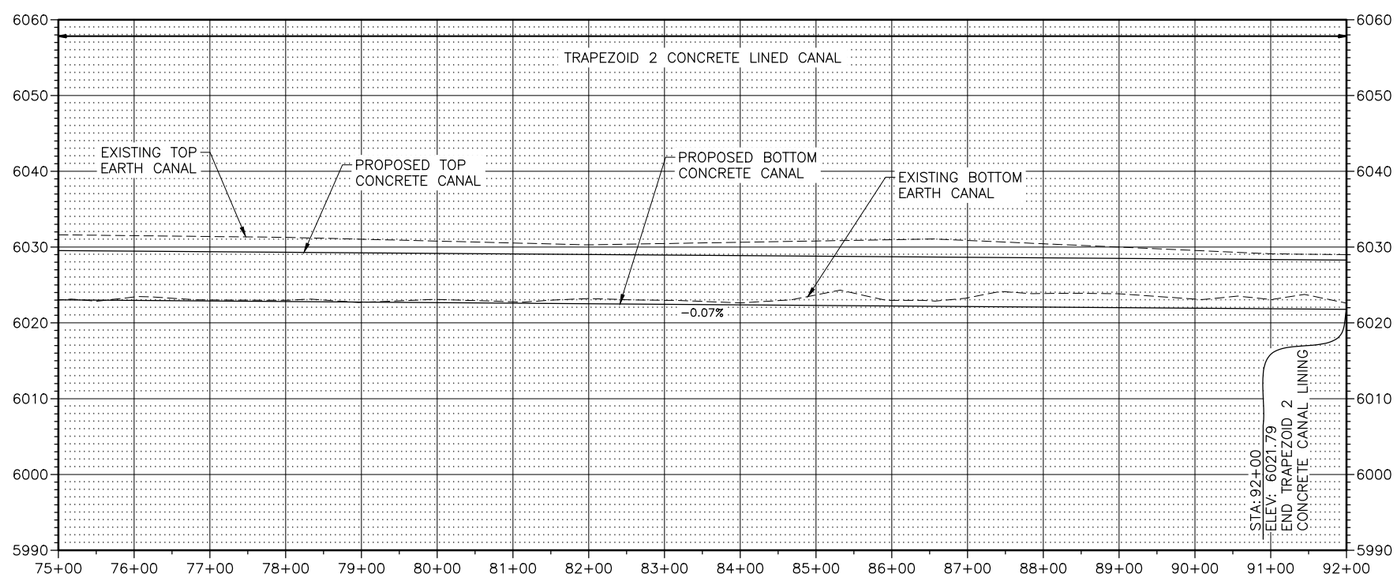

J-U-B ENGINEERS, INC.
305 S. Main Street
Unit 6
Palisade, CO 81526
Phone: 970.208.8508
www.jub.com

PRELIMINARY PLANS

NOT FOR CONSTRUCTION

REUSE OF DRAWINGS
J-U-B SHALL RETAIN ALL COMMON LAW, STATUTORY, COPYRIGHT AND OTHER RESERVED RIGHTS OF THESE DRAWINGS, AND THE SAME SHALL NOT BE REUSED WITHOUT J-U-B'S PRIOR WRITTEN CONSENT. ANY REUSE WITHOUT WRITTEN CONSENT BY J-U-B WILL BE AT CLIENTS SOLE RISK AND WITHOUT LIABILITY OR LEGAL EXPOSURE TO J-U-B.

NO.	DESCRIPTION	BY	APR.	DATE
	REVISION			

M&D CANAL CANAL LINING AND HILL STABILIZATION
UNCOMPAHGRE VALLEY WATER USERS ASSOCIATION

PLAN AND PROFILE

FILE : 81-20-017_C_201
JUB PROJ. # : 81-20-017
DRAWN BY: ----
DESIGN BY: ----
CHECKED BY: ----

ONE INCH
AT FULL SIZE, IF NOT ONE INCH, SCALE ACCORDINGLY

LAST UPDATED: 9/18/2023

SHEET NUMBER:
C-204

Plot Date:9/18/2023 4:00 PM Plotted By: Corey Blubaum
Date Created:10/18/2021 \\JUB\CENTRAL\CLIENTS\CO\BOSTWICKPARK\PROJECTS\81-20-017_PL-566\PLANE\DESIGN\M&D\CANAL\CAD\SHEETS\81-20-017_C_201.DWG

SECTION @ 12+09

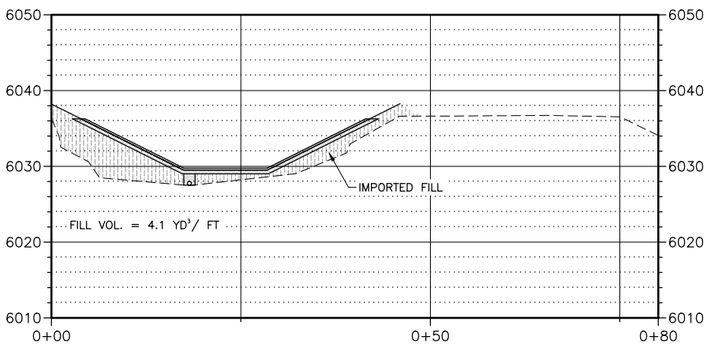

SECTION @ 16+18

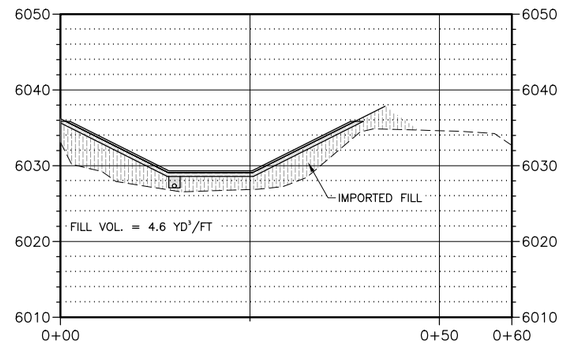

SECTION @ 20+23

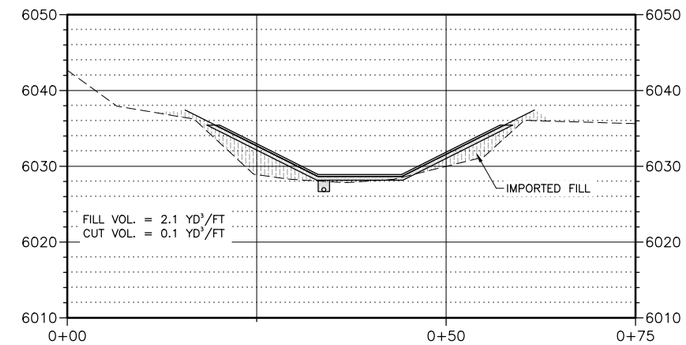

SECTION @ 26+61

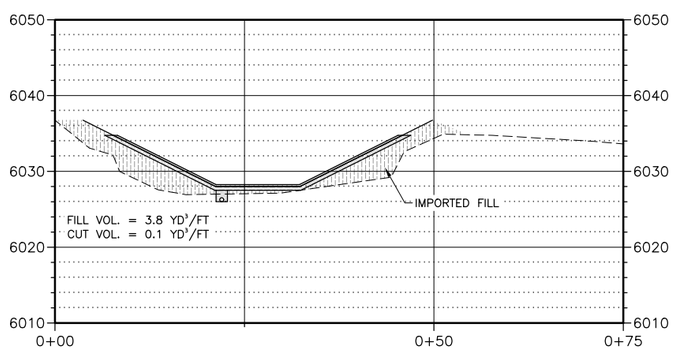

SECTION @ 30+93

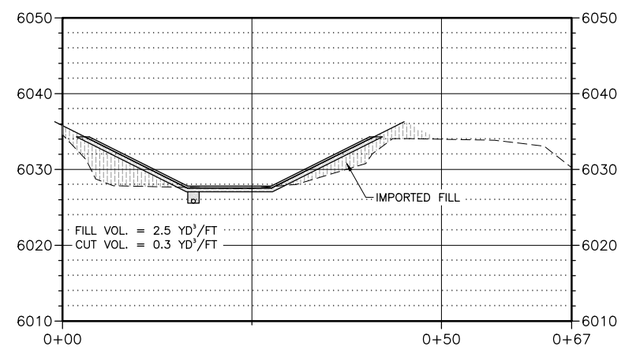

SECTION @ 34+97

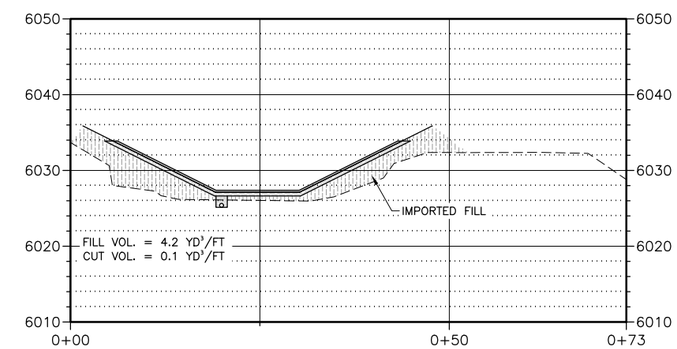

SECTION @ 38+00

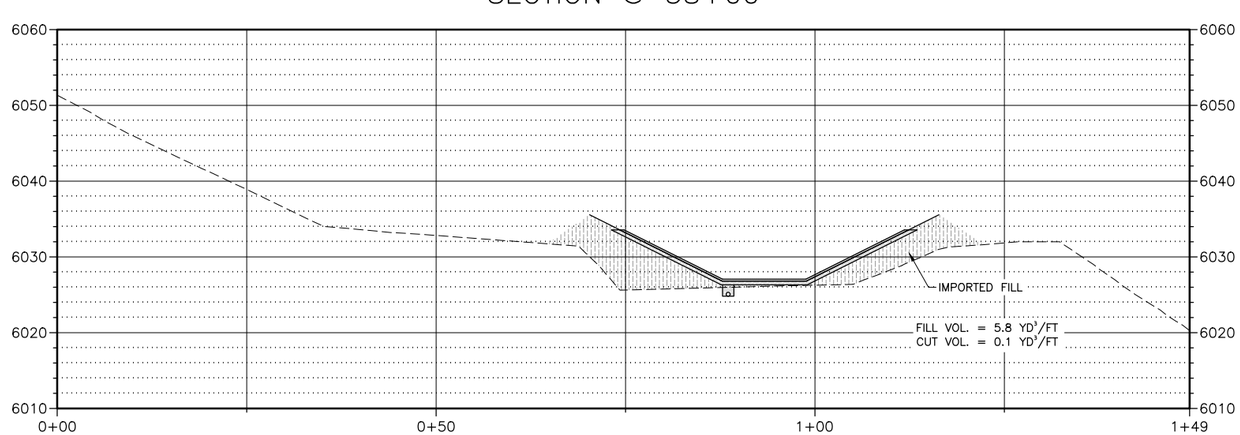

J-U-B ENGINEERS, INC.

J-U-B ENGINEERS, INC.
305 S. Main Street
Unit 6
Palisade, CO 81526
Phone: 970.208.8508
www.jub.com

PRELIMINARY PLANS

NOT FOR CONSTRUCTION

REUSE OF DRAWINGS
J-U-B SHALL RETAIN ALL COMMON LAW, STATUTORY, COPYRIGHT AND OTHER RESERVED RIGHTS OF THESE DRAWINGS, AND THE SAME SHALL NOT BE REUSED WITHOUT J-U-B'S PRIOR WRITTEN CONSENT. ANY REUSE WITHOUT WRITTEN CONSENT BY J-U-B WILL BE AT CLIENTS SOLE RISK AND WITHOUT LIABILITY OR LEGAL EXPOSURE TO J-U-B.

NO.	DESCRIPTION	BY	APR.	DATE

REVISION

M&D CANAL CANAL LINING AND HILL STABILIZATION
UNCOMPAHGRE VALLEY WATER USERS ASSOCIATION

SECTION VIEW

FILE : 81-20-017_C_30X
JUB PROJ. # : 81-20-017
DRAWN BY: DTF / RW
DESIGN BY: RW / NE
CHECKED BY: ----

ONE INCH
AT FULL SIZE, IF NOT ONE INCH, SCALE ACCORDINGLY

LAST UPDATED: 9/18/2023

SHEET NUMBER:
C-301

Plot Date:9/18/2023 4:00 PM Plotted By: Corey Blubaum
Date Created:10/18/2021 \\JUB\CENTRAL\CLIENTS\CO\BOSTWICKPARK\PROJECTS\81-20-017_PL-566PLANE\DESIGN\M&D\CANAL\CAD\SHEET\81-20-017_C_30X.DWG

SECTION @ 43+00

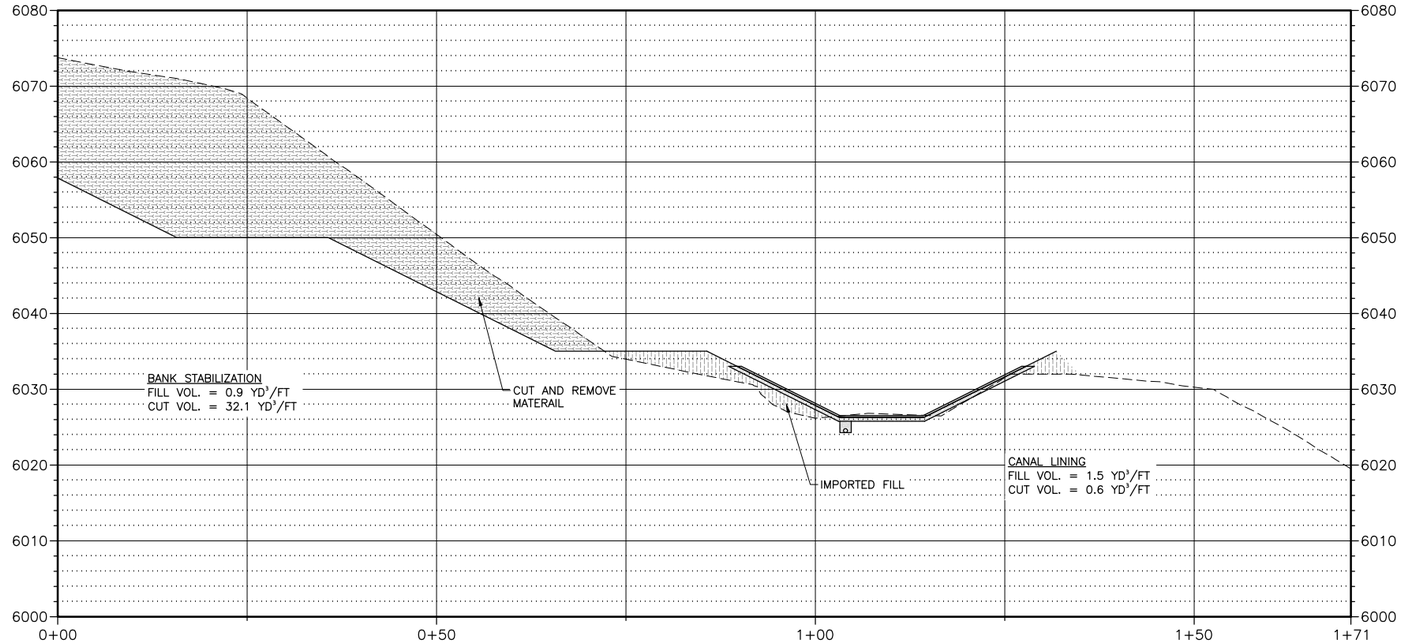

SECTION @ 46+00

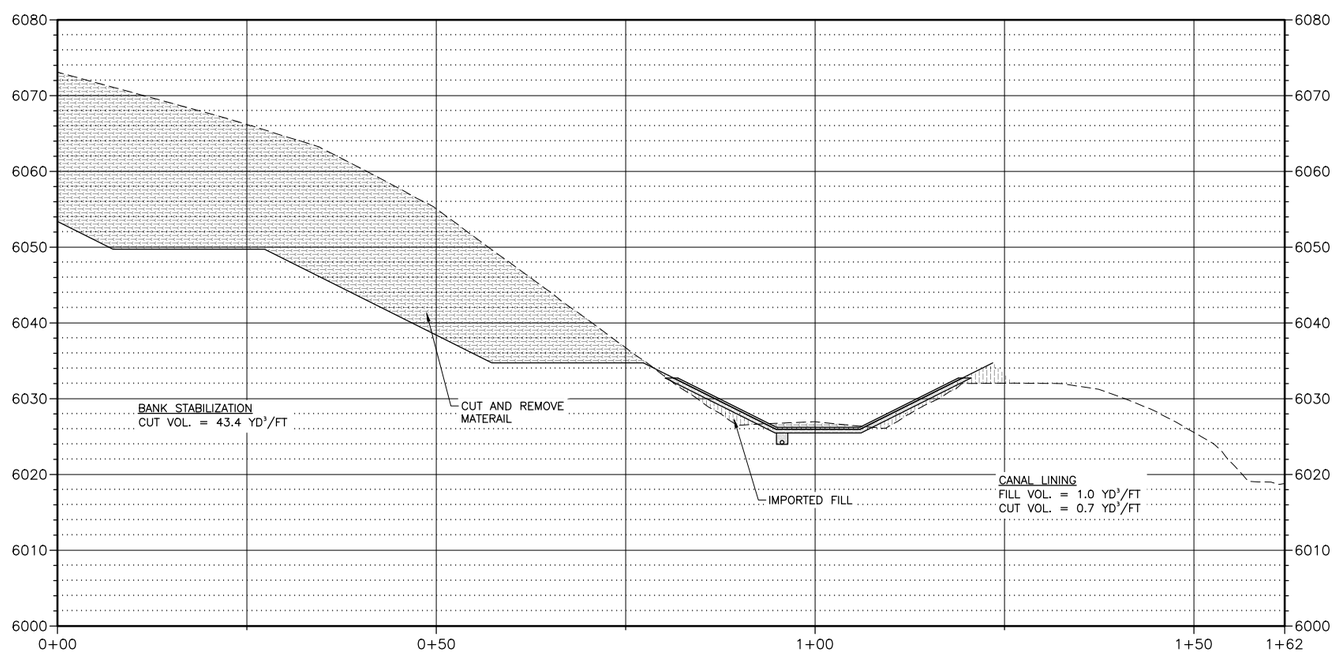

J-U-B ENGINEERS, INC.

J-U-B ENGINEERS, INC.
305 S. Main Street
Unit 6
Palisade, CO 81526
Phone: 970.208.8508
www.jub.com

PRELIMINARY PLANS

NOT FOR CONSTRUCTION

REUSE OF DRAWINGS
J-U-B SHALL RETAIN ALL COMMON LAW, STATUTORY, COPYRIGHT AND OTHER RESERVED RIGHTS OF THESE DRAWINGS, AND THE SAME SHALL NOT BE REUSED WITHOUT J-U-B'S PRIOR WRITTEN CONSENT. ANY REUSE WITHOUT WRITTEN CONSENT BY J-U-B WILL BE AT CLIENTS SOLE RISK AND WITHOUT LIABILITY OR LEGAL EXPOSURE TO J-U-B.

NO.	DESCRIPTION	BY	APR.	DATE

REVISION

M&D CANAL CANAL LINING AND HILL STABILIZATION
UNCOMPAHGRE VALLEY WATER USERS ASSOCIATION

SECTION VIEW

FILE : 81-20-017_C_30X
JUB PROJ. # : 81-20-017
DRAWN BY: DTF / RW
DESIGN BY: RW / NE
CHECKED BY: ----

ONE INCH
AT FULL SIZE, IF NOT ONE INCH, SCALE ACCORDINGLY

LAST UPDATED: 9/18/2023

SHEET NUMBER:

C-302

Plot Date:9/18/2023 4:00 PM Plotted By: Corey Blubaum
Date Created:10/18/2021 \\JUB\CENTRAL\CLIENTS\CO\BOSTWICKPARK\PROJECTS\81-20-017_PL-566\PLANE\DESIGN\M&D\CANAL\CAD\SHEETS\81-20-017_C_30X.DWG

SECTION @ 51+00

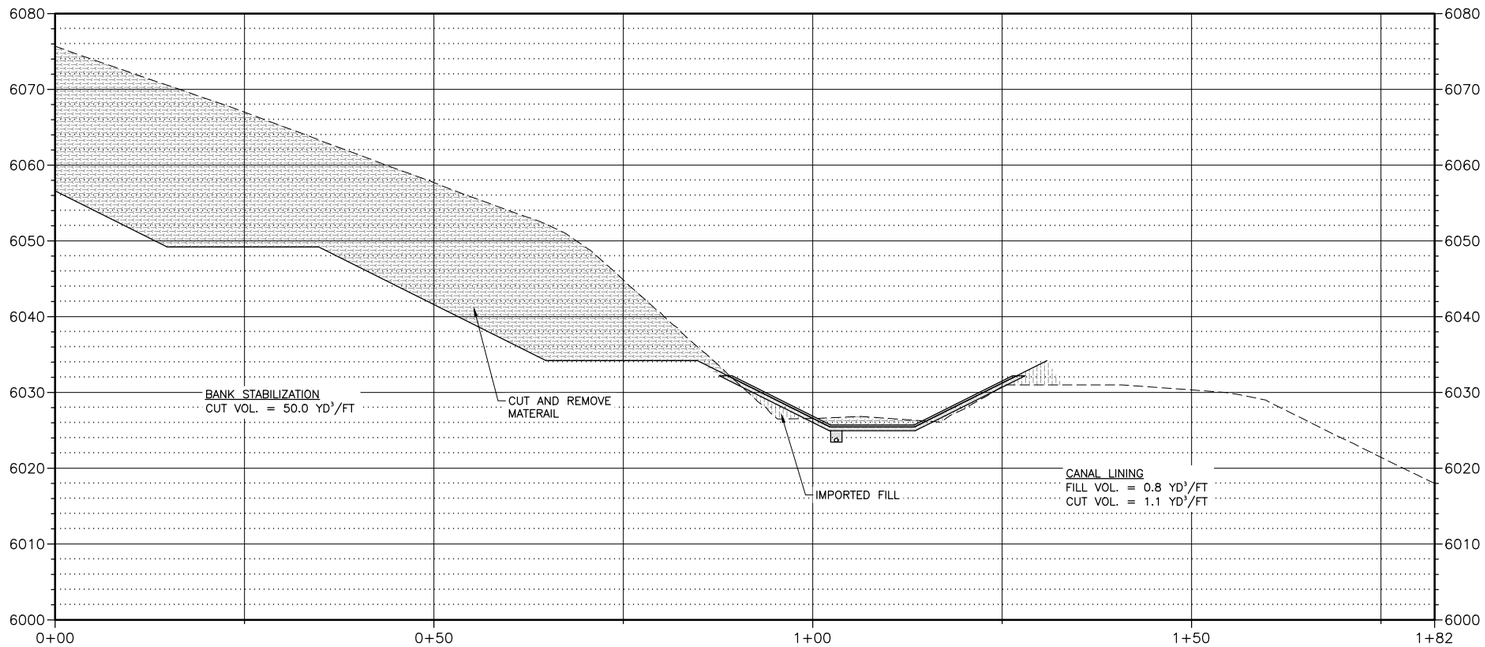

SECTION @ 56+00

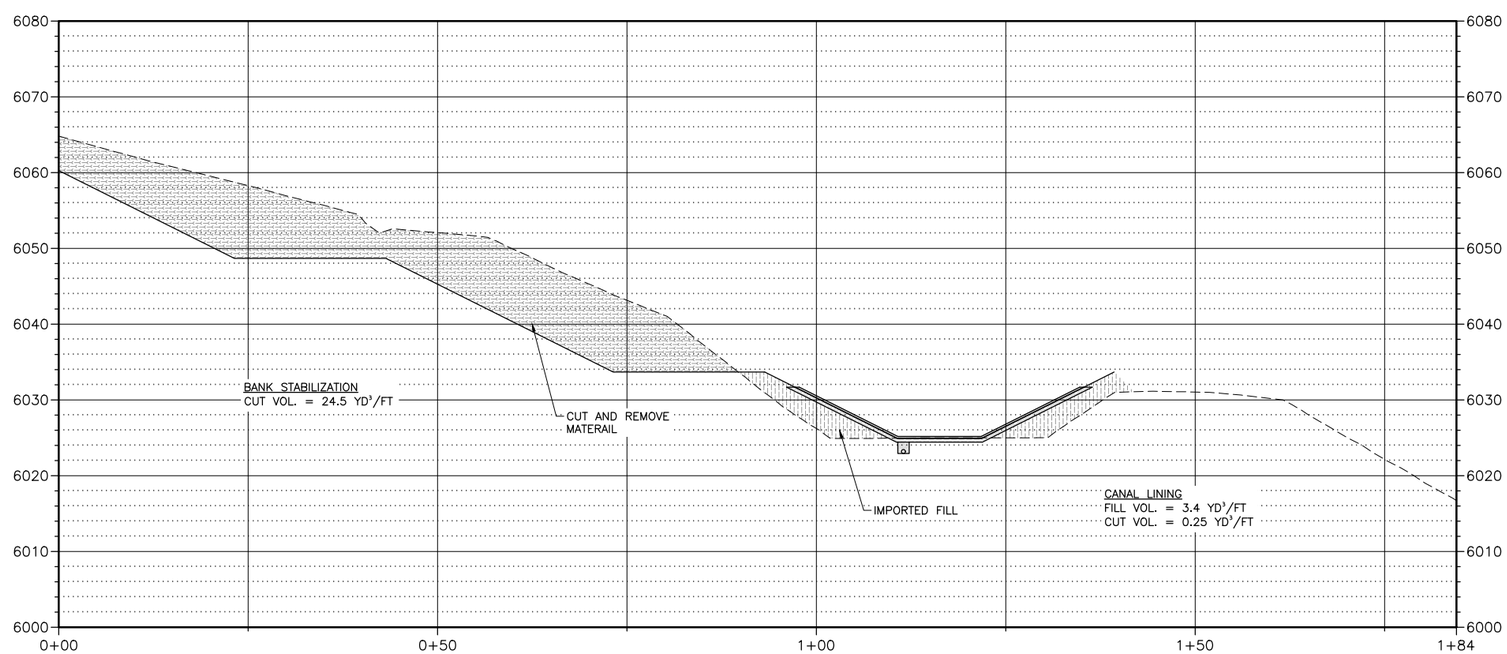

J-U-B ENGINEERS, INC.

J-U-B ENGINEERS, INC.
305 S. Main Street
Unit 6
Palisade, CO 81526
Phone: 970.208.8508
www.jub.com

PRELIMINARY PLANS

NOT FOR CONSTRUCTION

REUSE OF DRAWINGS
J-U-B SHALL RETAIN ALL COMMON LAW, STATUTORY, COPYRIGHT AND OTHER RESERVED RIGHTS OF THESE DRAWINGS, AND THE SAME SHALL NOT BE REUSED WITHOUT J-U-B'S PRIOR WRITTEN CONSENT. ANY REUSE WITHOUT WRITTEN CONSENT BY J-U-B WILL BE AT CLIENTS SOLE RISK AND WITHOUT LIABILITY OR LEGAL EXPOSURE TO J-U-B.

NO.	DESCRIPTION	BY	APR.	DATE

REVISION

M&D CANAL CANAL LINING AND HILL STABILIZATION
UNCOMPAHGRE VALLEY WATER USERS ASSOCIATION

SECTION VIEW

FILE : 81-20-017_C_30X
JUB PROJ. # : 81-20-017
DRAWN BY: DTF / RW
DESIGN BY: RW / NE
CHECKED BY: ----

ONE INCH
AT FULL SIZE, IF NOT ONE INCH, SCALE ACCORDINGLY

LAST UPDATED: 9/18/2023

SHEET NUMBER:
C-303

Plot Date:9/18/2023 4:00 PM Plotted By: Corey Blubaum
Date Created:10/18/2021 \\JUB\CENTRAL\CLIENTS\CO\BOSTWICKPARK\PROJECTS\81-20-017_PL-566\PLANE\DESIGN\M&D\CANAL\CAD\SHEETS\81-20-017_C_30X.DWG

SECTION @ 61+00

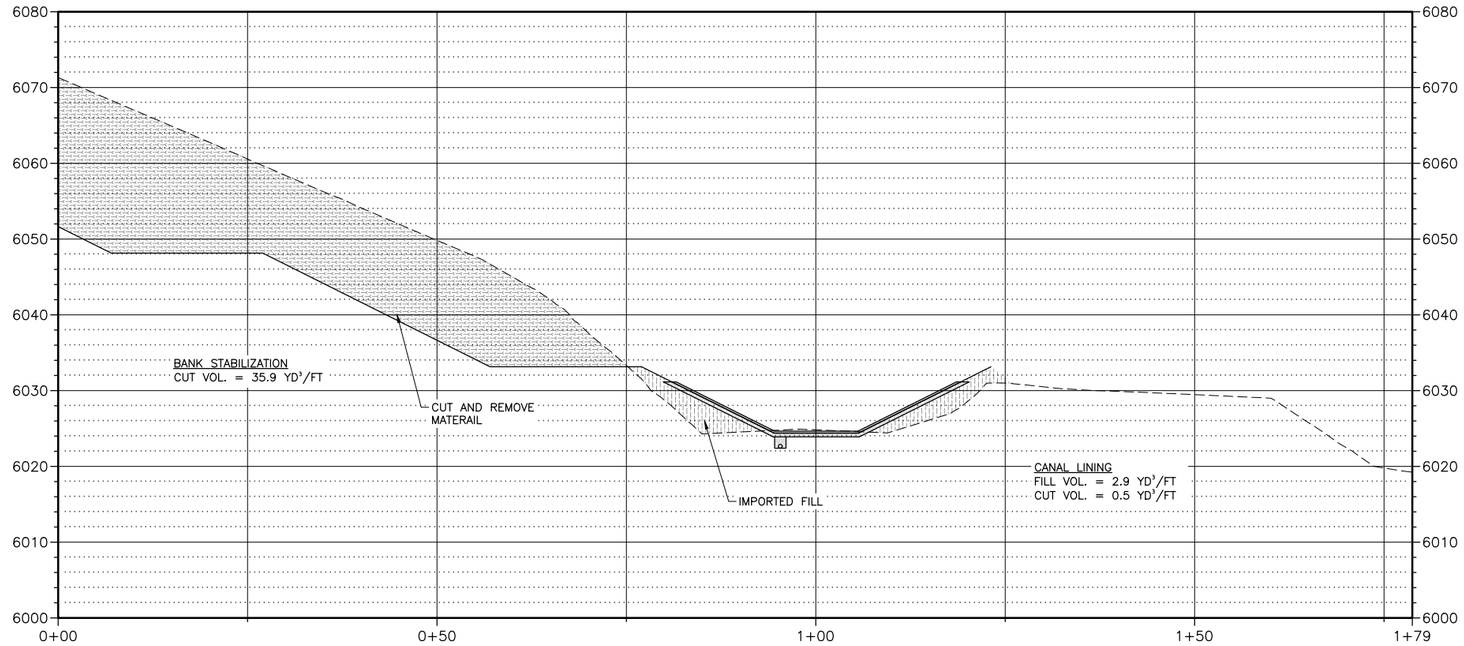

SECTION @ 65+49

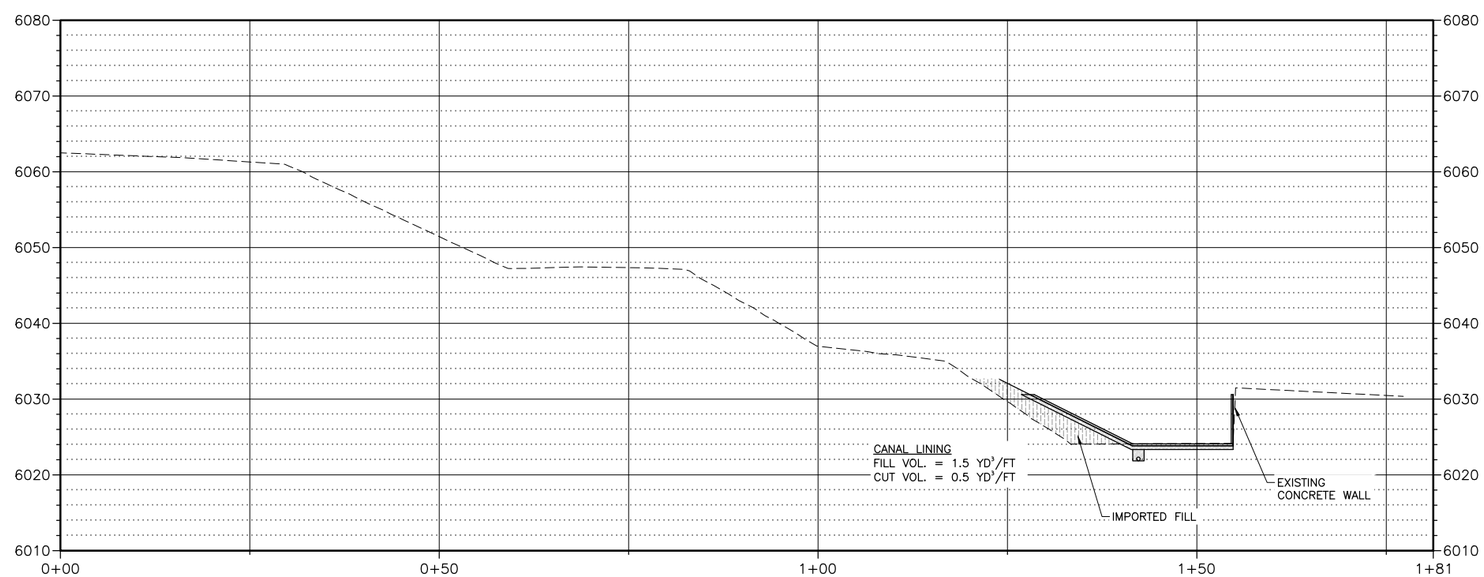

J-U-B ENGINEERS, INC.

J-U-B ENGINEERS, INC.
305 S. Main Street
Unit 6
Palisade, CO 81526
Phone: 970.208.8508
www.jub.com

PRELIMINARY PLANS

NOT FOR CONSTRUCTION

REUSE OF DRAWINGS
J-U-B SHALL RETAIN ALL COMMON LAW, STATUTORY, COPYRIGHT AND OTHER RESERVED RIGHTS OF THESE DRAWINGS, AND THE SAME SHALL NOT BE REUSED WITHOUT J-U-B'S PRIOR WRITTEN CONSENT. ANY REUSE WITHOUT WRITTEN CONSENT BY J-U-B WILL BE AT CLIENTS SOLE RISK AND WITHOUT LIABILITY OR LEGAL EXPOSURE TO J-U-B.

REVISION

NO.	DESCRIPTION	BY	APR.	DATE

M&D CANAL CANAL LINING AND HILL STABILIZATION
UNCOMPAHGRE VALLEY WATER USERS ASSOCIATION

SECTION VIEW

FILE : 81-20-017_C_30X
JUB PROJ. # : 81-20-017
DRAWN BY: DTF / RW
DESIGN BY: RW / NE
CHECKED BY: ----

ONE INCH
AT FULL SIZE, IF NOT ONE INCH, SCALE ACCORDINGLY

LAST UPDATED: 9/18/2023

SHEET NUMBER:

C-304

Plot Date:9/18/2023 4:00 PM Plotted By: Corey Bluibaum
Date Created:10/18/2021 \\JUB\CENTRAL\CLIENTS\CO\BOSTWICKPARK\PROJECTS\81-20-017_PL-566\PLANE\DESIGN\M&D\CANAL\CAD\SHEETS\81-20-017_C_30X.DWG

SECTION @ 69+38

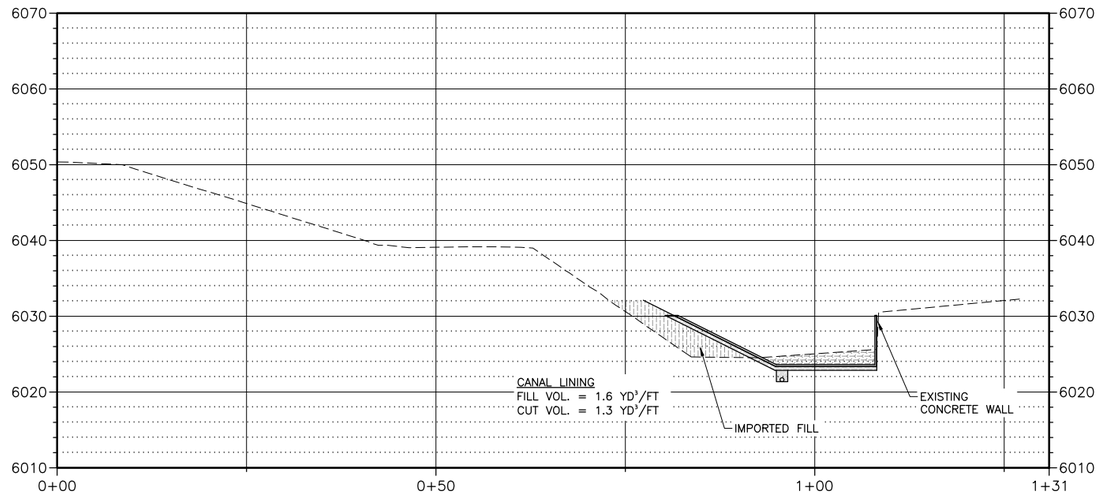

SECTION @ 73+38

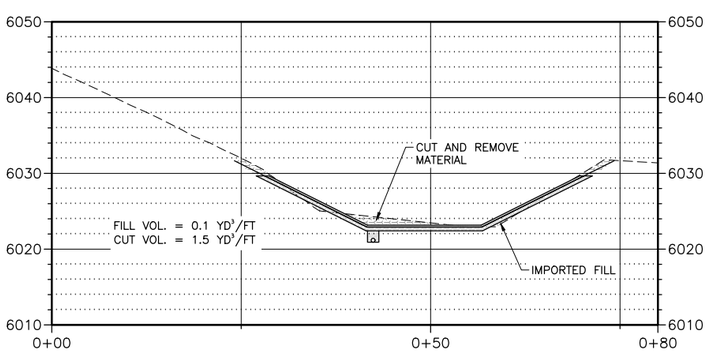

SECTION @ 78+00

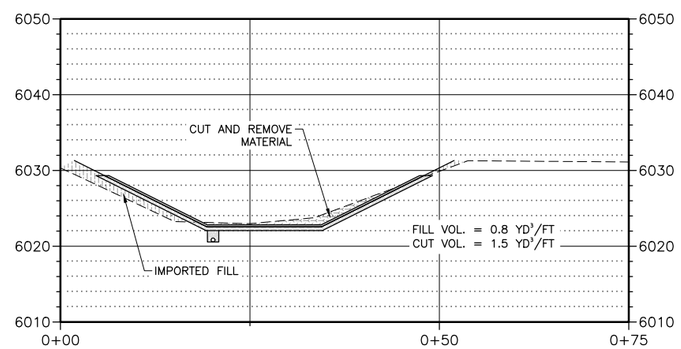

SECTION @ 81+99

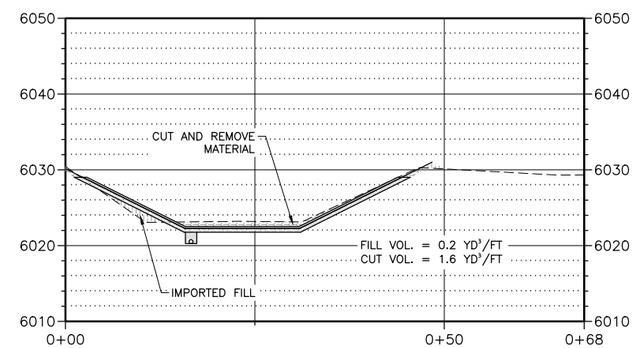

Plot Date:9/18/2023 4:00 PM Plotted By: Corey Bluibaum
Date Created:10/18/2021 \\JUB\CENTRAL\CLIENTS\CO\BOSTWICKPARK\PROJECTS\81-20-017_PL-566FLANE\DESIGN\M&DCANAL\CAD\SHEETS\81-20-017_C_30X.DWG

J-U-B ENGINEERS, INC.

J-U-B ENGINEERS, INC.
305 S. Main Street
Unit 6
Palisade, CO 81526
Phone: 970.208.8508
www.jub.com

PRELIMINARY PLANS

NOT FOR CONSTRUCTION

REUSE OF DRAWINGS:
J-U-B SHALL RETAIN ALL COMMON LAW, STATUTORY, COPYRIGHT AND OTHER RESERVED RIGHTS OF THESE DRAWINGS, AND THE SAME SHALL NOT BE REUSED WITHOUT J-U-B'S PRIOR WRITTEN CONSENT. ANY REUSE WITHOUT WRITTEN CONSENT BY J-U-B WILL BE AT CLIENTS SOLE RISK AND WITHOUT LIABILITY OR LEGAL EXPOSURE TO J-U-B.

NO.	DESCRIPTION	BY	APR.	DATE

REVISION

M&D CANAL CANAL LINING AND HILL STABILIZATION
UNCOMPAHGRE VALLEY WATER USERS ASSOCIATION

SECTION VIEW

FILE : 81-20-017_C_30X
JUB PROJ. # : 81-20-017
DRAWN BY: DTF / RW
DESIGN BY: RW / NE
CHECKED BY: ----

ONE INCH
AT FULL SIZE, IF NOT ONE INCH, SCALE ACCORDINGLY

LAST UPDATED: 9/18/2023

SHEET NUMBER:

C-305

SECTION @ 86+57

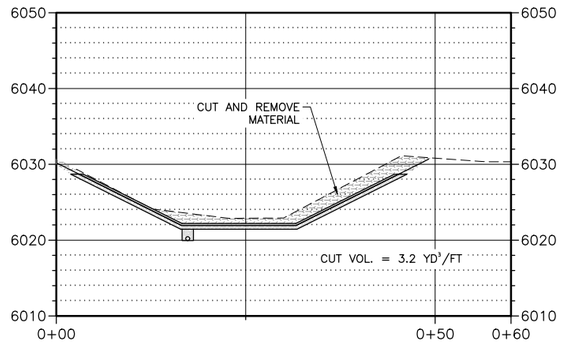

SECTION @ 91+02

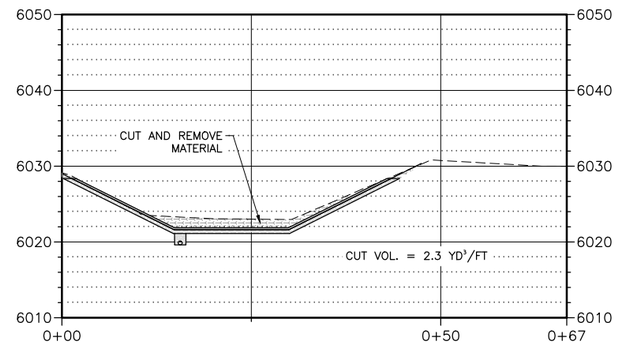

SECTION @ 92+00

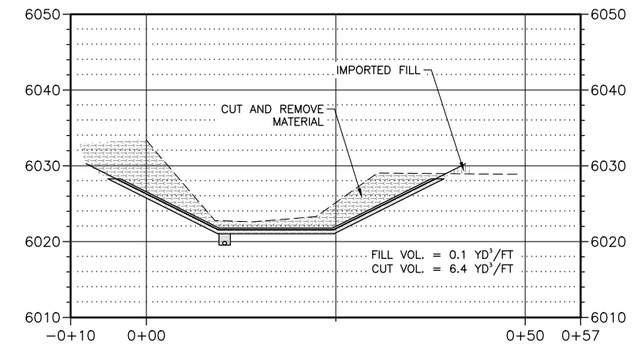

J-U-B ENGINEERS, INC.

J-U-B ENGINEERS, INC.
305 S. Main Street
Unit 6
Palisade, CO 81526
Phone: 970.208.8508
www.jub.com

PRELIMINARY PLANS

NOT FOR CONSTRUCTION

REUSE OF DRAWINGS
J-U-B SHALL RETAIN ALL COMMON LAW, STATUTORY, COPYRIGHT AND OTHER RESERVED RIGHTS OF THESE DRAWINGS, AND THE SAME SHALL NOT BE REUSED WITHOUT J-U-B'S PRIOR WRITTEN CONSENT. ANY REUSE WITHOUT WRITTEN CONSENT BY J-U-B WILL BE AT CLIENTS SOLE RISK AND WITHOUT LIABILITY OR LEGAL EXPOSURE TO J-U-B.

REVISION

NO.	DESCRIPTION	BY	APR.	DATE

M&D CANAL CANAL LINING AND HILL STABILIZATION
UNCOMPAHGRE VALLEY WATER USERS ASSOCIATION

SECTION VIEW

FILE : 81-20-017_C_30X
JUB PROJ. # : 81-20-017
DRAWN BY: DTF / RW
DESIGN BY: RW / NE
CHECKED BY: ----

ONE INCH
AT FULL SIZE, IF NOT ONE INCH, SCALE ACCORDINGLY

LAST UPDATED: 9/18/2023

SHEET NUMBER:
C-306

Plot Date:9/18/2023 4:00 PM Plotted By: Corey Blubaum
Date Created:10/18/2021 \\JUB\CENTRAL\CLIENTS\CO\BOSTWICKPARK\PROJECTS\81-20-017_PL-566\PLANE\DESIGN\M&D\CANAL\CAD\SHEET\81-20-017_C_30X.DWG

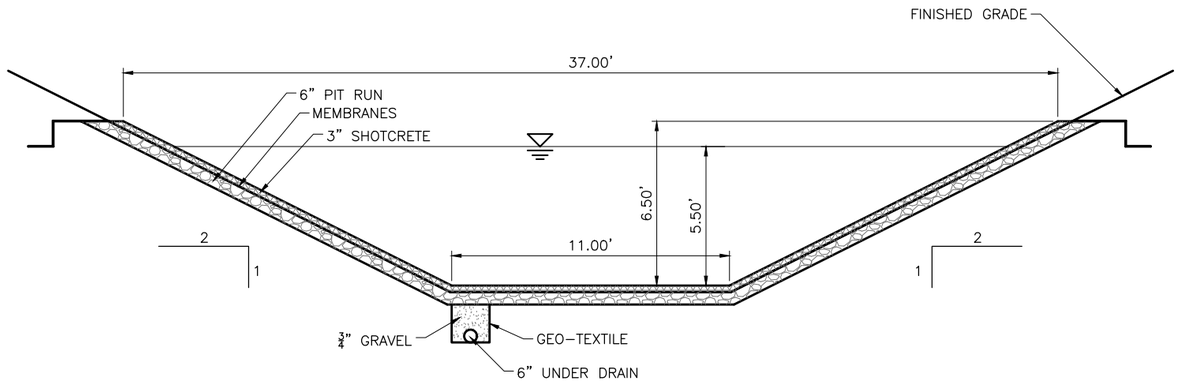

A1 TRAPEZOID 1 CANAL LINING
SCALE:NOT TO SCALE

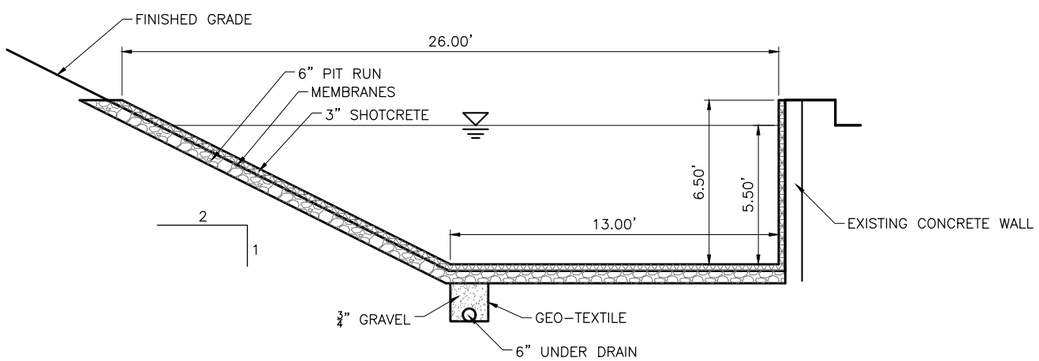

B1 HALF TRAPEZOID CANAL LINING
SCALE:NOT TO SCALE

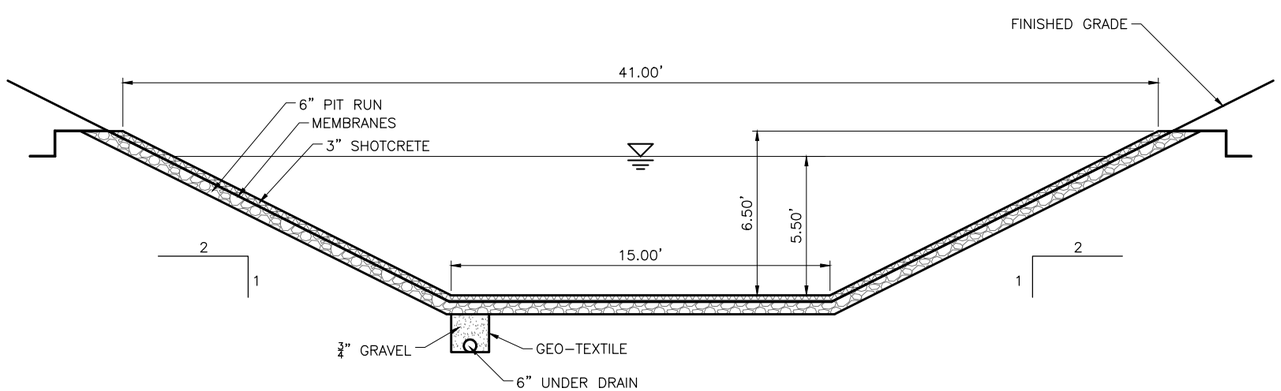

C1 TRAPEZOID 2 CANAL LINING
SCALE:NOT TO SCALE

Plot Date:9/18/2023 4:01 PM Plotted By: Corey Blubaum
Date Created:10/14/2021 \\JUB\CENTRAL\CLIENTS\CO\BOSWICKPARK\PROJECTS\81-20-017_PL-566PLANEA\DESIGN\M&D\CANAL\CAD\SHEET\81-20-017_C_50X.DWG

J-U-B ENGINEERS, INC.

J-U-B ENGINEERS, INC.
305 S. Main Street
Unit 6
Palisade, CO 81526
Phone: 970.208.8508
www.jub.com

PRELIMINARY PLANS

NOT FOR CONSTRUCTION

REUSE OF DRAWINGS
J-U-B SHALL RETAIN ALL COMMON LAW, STATUTORY, COPYRIGHT AND OTHER RESERVED RIGHTS OF THESE DRAWINGS, AND THE SAME SHALL NOT BE REUSED WITHOUT J-U-B'S PRIOR WRITTEN CONSENT. ANY REUSE WITHOUT WRITTEN CONSENT BY J-U-B WILL BE AT CLIENTS SOLE RISK AND WITHOUT LIABILITY OR LEGAL EXPOSURE TO J-U-B.

NO.	DESCRIPTION	BY	APR.	DATE

REVISION

M&D CANAL CANAL LINING AND HILL STABILIZATION
UNCOMPAHGRE VALLEY WATER USERS ASSOCIATION

DETAILS

FILE : 81-20-017_C_50X
JUB PROJ. # : 81-20-017
DRAWN BY: DTF / RW
DESIGN BY: RW / NE
CHECKED BY: NJE
ONE INCH
AT FULL SIZE, IF NOT ONE INCH, SCALE ACCORDINGLY
LAST UPDATED: 9/18/2023

SHEET NUMBER:
C-501

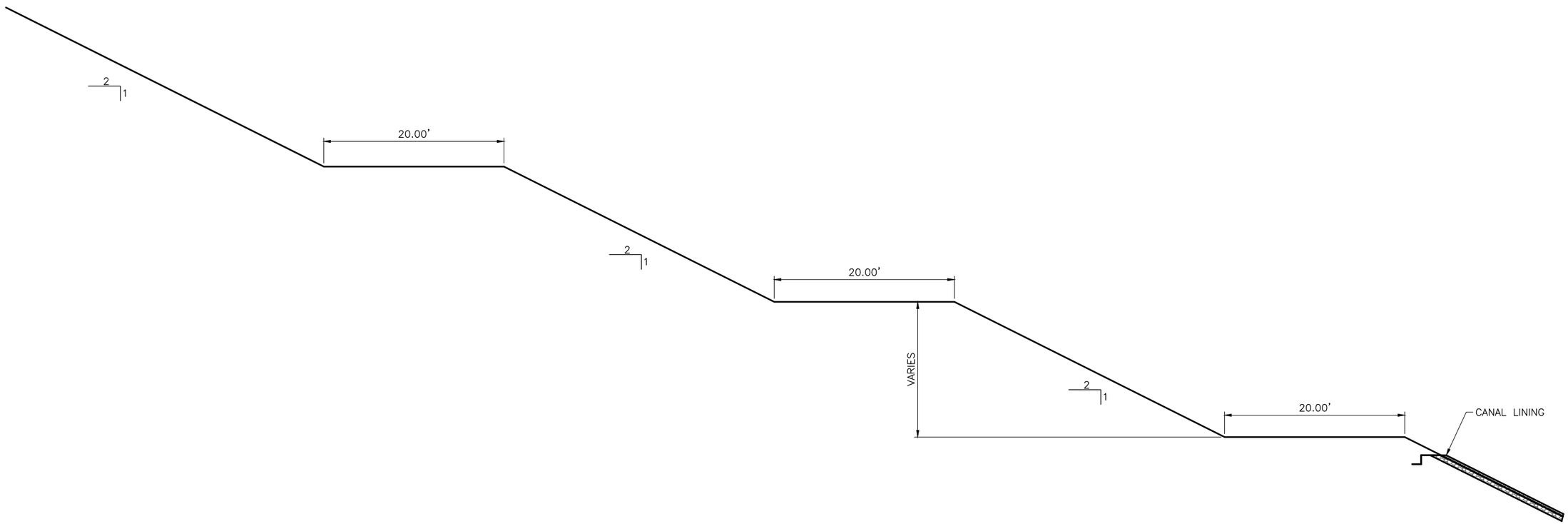

B1 BANK STABILIZATION DETAIL (PROFILE VIEW)
SCALE: NOT TO SCALE

Plot Date:9/18/2023 4:01 PM Plotted By: Corey Blubaum
Date Created:10/14/2021 \\JUB\CENTRAL\CLIENTS\CO\BOSTWICKPARK\PROJECTS\81-20-017_PL-566\PLANE\DESIGN\M&D\CANAL\CAD\SHEET\81-20-017_C_50X.DWG

J-U-B ENGINEERS, INC.

J-U-B ENGINEERS, INC.
305 S. Main Street
Unit 6
Palisade, CO 81526
Phone: 970.208.8508
www.jub.com

PRELIMINARY PLANS

NOT FOR CONSTRUCTION

REUSE OF DRAWINGS:
J-U-B SHALL RETAIN ALL COMMON LAW, STATUTORY, COPYRIGHT AND OTHER RESERVED RIGHTS OF THESE DRAWINGS, AND THE SAME SHALL NOT BE REUSED WITHOUT J-U-B'S PRIOR WRITTEN CONSENT. ANY REUSE WITHOUT WRITTEN CONSENT BY J-U-B WILL BE AT CLIENTS SOLE RISK AND WITHOUT LIABILITY OR LEGAL EXPOSURE TO J-U-B.

REVISION			
NO.	DESCRIPTION	BY	APR. DATE

M&D CANAL CANAL LINING AND HILL STABILIZATION
UNCOMPAHGRE VALLEY WATER USERS ASSOCIATION

DETAILS

FILE : 81-20-017_C_50X
JUB PROJ. # : 81-20-017
DRAWN BY: DTF / RW
DESIGN BY: RW / NE
CHECKED BY: NJE

ONE INCH
AT FULL SIZE, IF NOT ONE INCH, SCALE ACCORDINGLY

LAST UPDATED: 9/18/2023

SHEET NUMBER:
C-502