HOUSTON engineering, inc.

Fargo, ND | HEI No. 7135_0037
DRAFT February 23rd, 2022

Downstream Embankment at Bylin Dam – Walsh County, North Dakota

NORTH BRANCH FOREST RIVER DAM NO. 1 (BYLIN DAM)

Appendix D-4: Concept Design Report (DRAFT)

NRCS
Natural Resources Conservation Service

NORTH BRANCH FOREST RIVER DAM NO. 1 (BYLIN DAM)

Appendix D-4: CONCEPT DESIGN REPORT

February 23rd, 2022

DRAFT

Walsh County Water Resource District

Houston Engineering, Inc.
1401 21st Ave. N
Fargo, ND 58102
Phone # 701.237.5065

I hereby certify that this plan, specification, or report was prepared by me or under my direct supervision, and that I am a duly Licensed Engineer under the laws of the State of North Dakota.

_____	_____
Paul D. LeClaire, PE	Michael M. Opat, PE
PE-28012	PE-6513
_____	_____
Date	Date

TABLE OF CONTENTS

1 BACKGROUND D-4-1
1.1 RELAVENT ANALYSIS COMPLETED PRIOR TO THIS REPORT D-4-1
1.2 VERTICAL DATUM D-4-1
2 PROPOSED SITE CHARACTERISTICS D-4-1
2.1 EMBANKMENT D-4-1
2.2 PRINCIPAL SPILLWAY D-4-2
2.2.1 PRINCIPAL SPILLWAY CONDUIT D-4-2
2.2.2 PRINCIPAL SPILLWAY RISER TOWER D-4-3
2.2.3 PRINCIPAL SPILLWAY ENERGY DISSIPATION D-4-4
2.3 AUXILIARY SPILLWAY D-4-4
2.3.1 AUXILIARY SPILLWAY APPROACH SECTION D-4-4
2.3.2 AUXILIARY SPILLWAY CREST AND DOWNSTREAM CHANNEL D-4-4
2.3.3 AUXILIARY SPILLWAY OUTLET D-4-5
3 HAZARD CLASSIFICATION D-4-5
3.1 BREACH CRITERIA AND RESULTS D-4-5
3.2 HAZARD CLASSIFICATION D-4-7
4 DAM SAFETY REQUIREMENTS D-4-8
4.1 PSH DESIGN EVENTS D-4-8
4.2 ASH DESIGN EVENTS D-4-9
4.2.1 AUXILIARY SPILLWAY CAPACITY D-4-9
4.2.2 AUXILIARY SPILLWAY STABILITY D-4-10
4.3 FBH DESIGN EVENTS D-4-10
4.3.1 AUXILIARY SPILLWAY CAPACITY D-4-10
4.3.2 AUXILIARY SPILLWAY INTEGRITY D-4-11
5 SYNTHETIC EVENTS AND SITE PERFORMANCE D-4-11
5.1 HYDROLOGY D-4-11
5.2 HYDRAULICS AND RESULTING INUNDATION D-4-12
6 ESTIMATED PROJECT COST D-4-14
7 SUMMARY D-4-15
8 REFERENCES ..... D-4-ERROR! BOOKMARK NOT DEFINED.

TABLES

Table D-4-1: Residential Structures Impacted by a Breach of Bylin Dam D-4-6
Table D-4-2: Road Overtopping Data for ND Highway 32 During a Breach of Bylin Dam. D-4-6
Table D-4-3: Technical Release 210-60 Minimum Precipitation Data for High Hazard Dams D-4-8
Table D-4-4: Principal Spillway Hydrograph SITES Output for Proposed Structural Alternative D-4-9
Table D-4-5: Freeboard Hydrograph Results for Proposed Structural Alternative D-4-11
Table D-4-6: North Branch Forest River Watershed Four-Day Rainfall and Runoff Depths D-4-12
Table D-4-7: Bylin Dam Site Performance During Synthetic Rainfall Events D-4-13
Table D-4-8: North Branch Forest River Watershed Inundation for Synthetic Rainfall Events D-4-14
Table D-4-9: Preliminary Engineer's Opinion of Probable Cost D-4-14

FIGURES

Figure D-4-1: Stage-Discharge Relationship (existing and proposed)
Figure D-4-2: Dam Breach Outflow Hydrograph
Figure D-4-3: Depth-Velocity-Flood Danger Level Relationship for Houses Built on Foundations Downstream of Bylin Dam
Figure D-4-4: Depth-Velocity-Flood Danger Level Relationship for Passenger Vehicles Downstream of Bylin Dam
Figure D-4-5: Synthetic Event Reservoir Inundation at Bylin Dam

ATTACHMENTS

Attachment D-4-1: Preliminary Plan Set
Attachment D-4-2: Principal Spillway Riser Tower Calculations
Attachment D-4-3: Principal Spillway Energy Dissipation Calculations
Attachment D-4-4: Auxiliary Spillway ACB Calculations
Attachment D-4-5: TR 210-60 Peak Breach Discharge Calculations
Attachment D-4-6: Stability Analysis Data – SITES Output

FIGURES

Figure D-4-1: Stage-Discharge Relationship (existing and proposed)
Figure D-4-2: Dam Breach Outflow Hydrograph
Figure D-4-3: Depth-Velocity-Flood Danger Level Relationship for Houses Built on Foundations Downstream of Bylin Dam
Figure D-4-4: Depth-Velocity-Flood Danger Level Relationship for Passenger Vehicles Downstream of Bylin Dam
Figure D-4-5: Synthetic Event Reservoir Inundation at Bylin Dam

***Figure D-4-1**: Stage-Discharge Relationship (existing and proposed)*

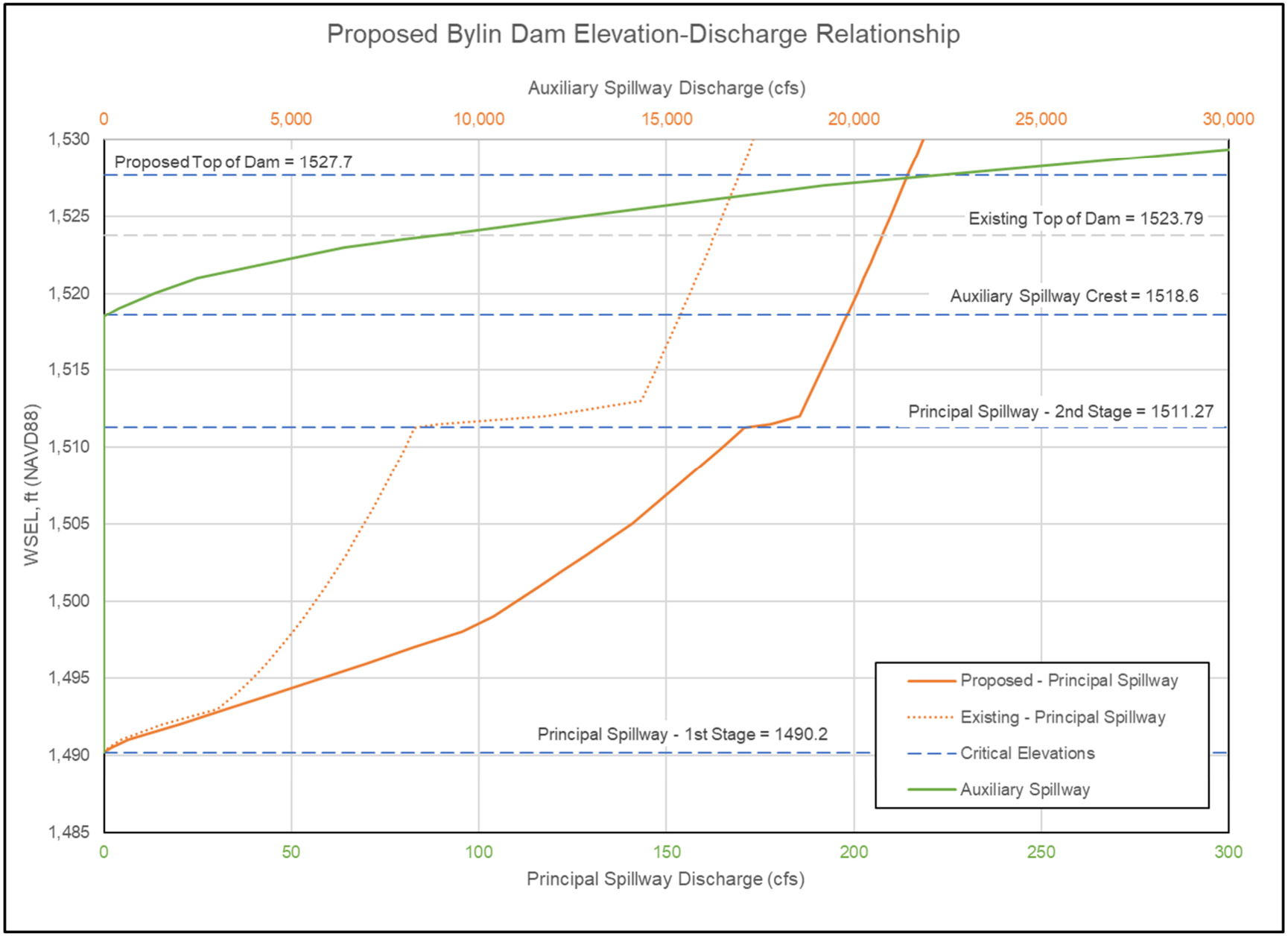

***Figure D-4-2**: Dam Breach Outflow Hydrograph*

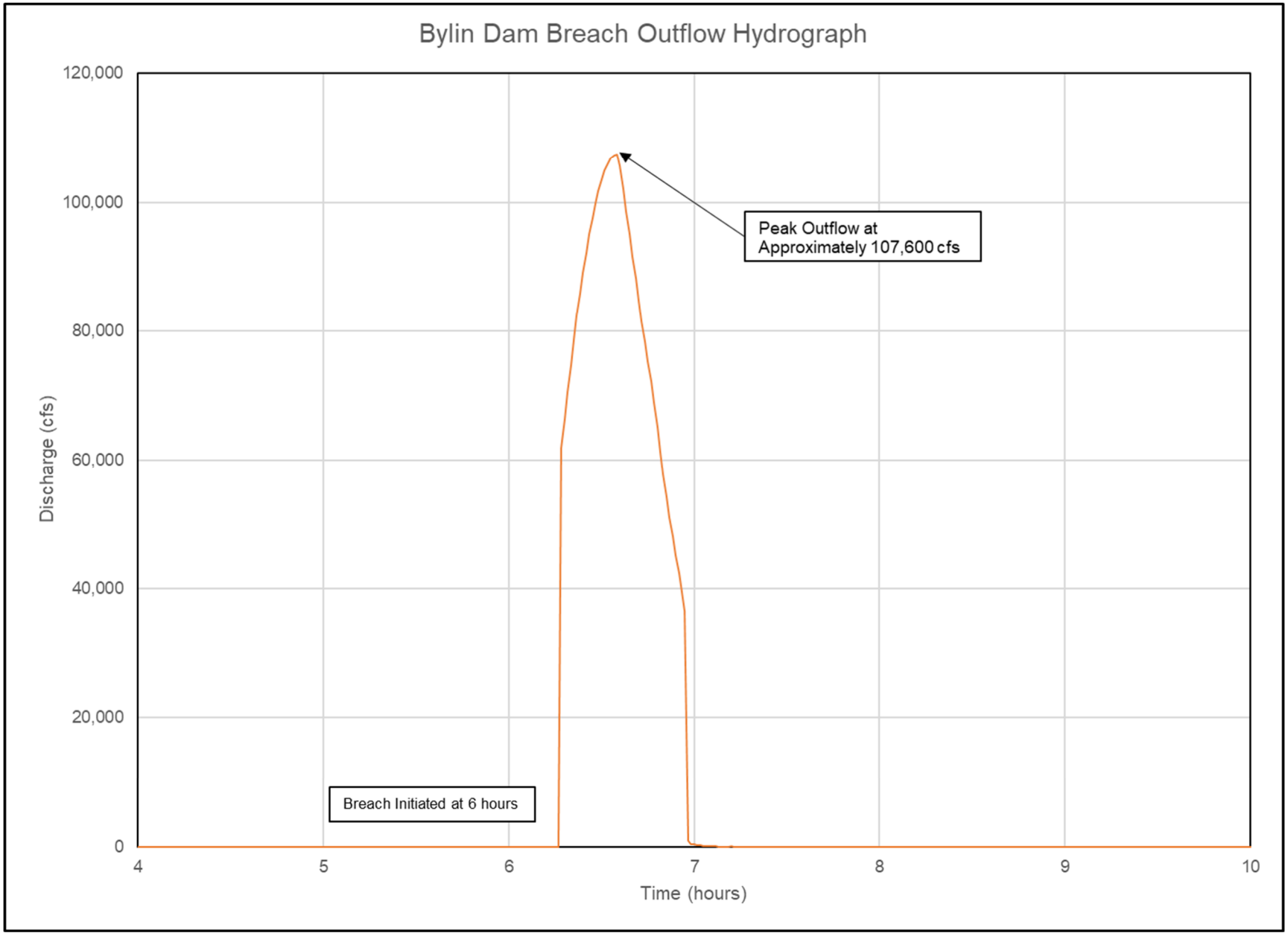

***Figure D-4-3**: Depth-Velocity-Flood Danger Level Relationship for Houses Built on Foundations Downstream of Bylin Dam*

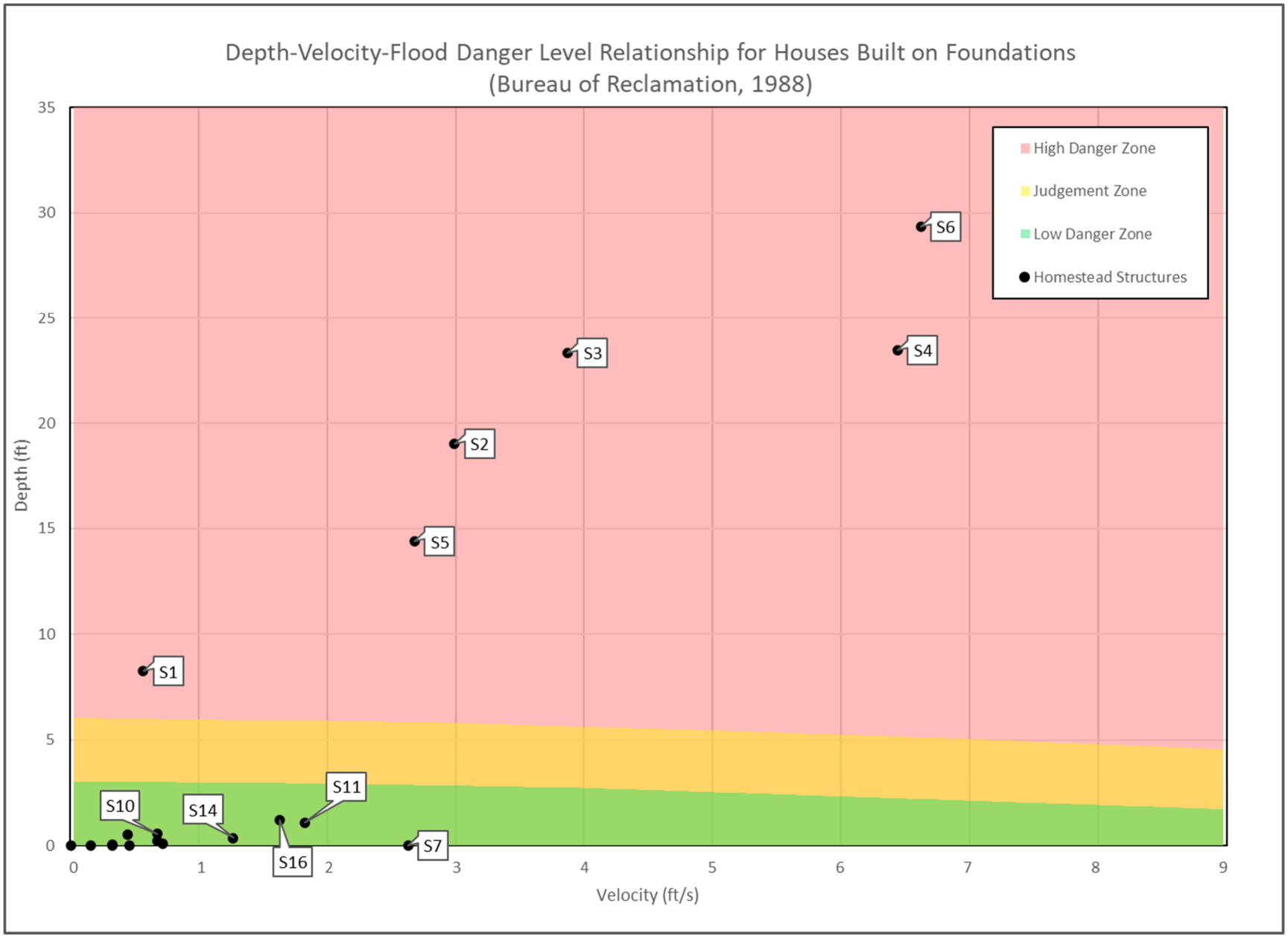

***Figure D-4-4**: Depth-Velocity-Flood Danger Level Relationship for Passenger Vehicles Downstream of Bylin Dam*

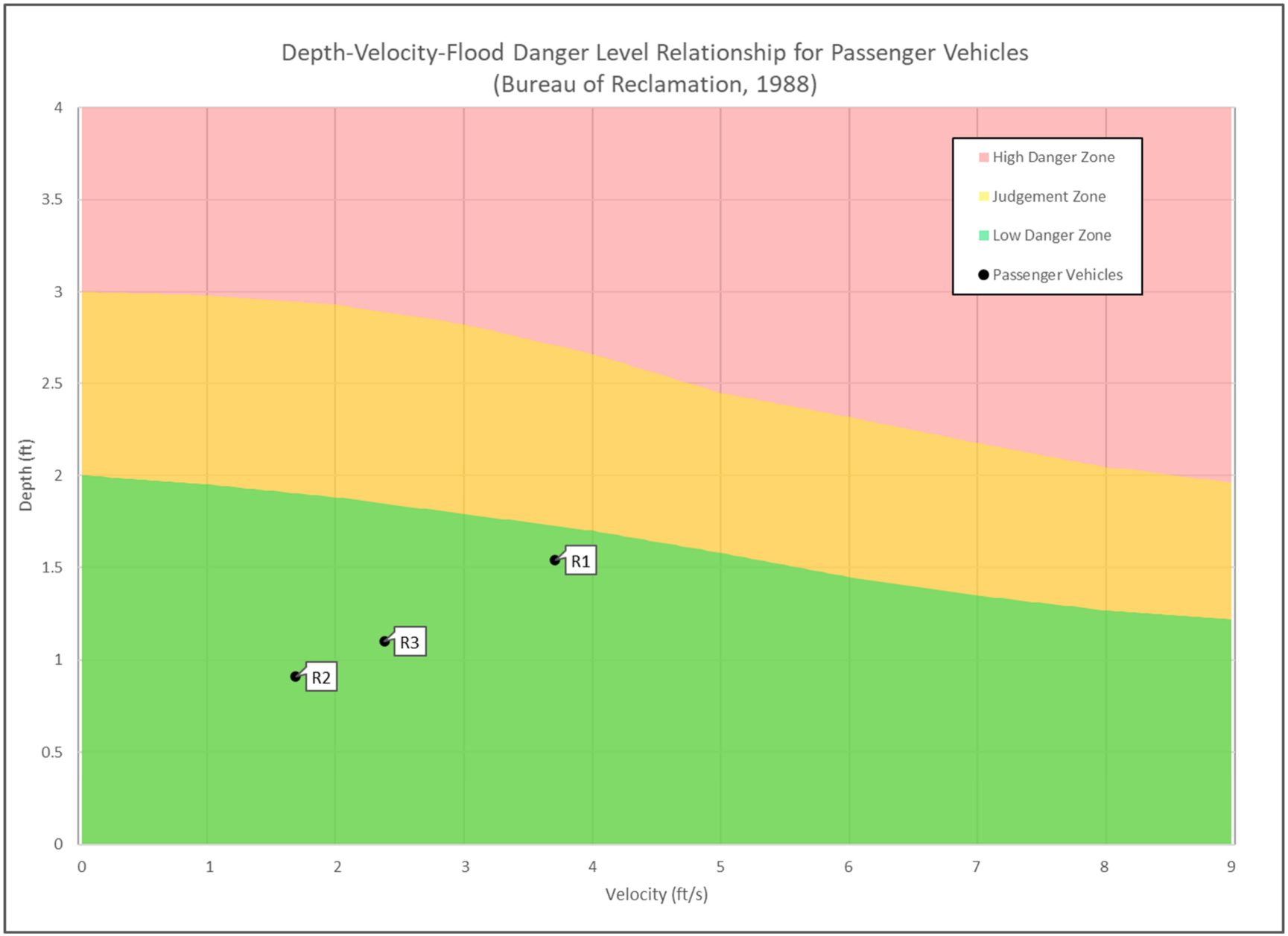

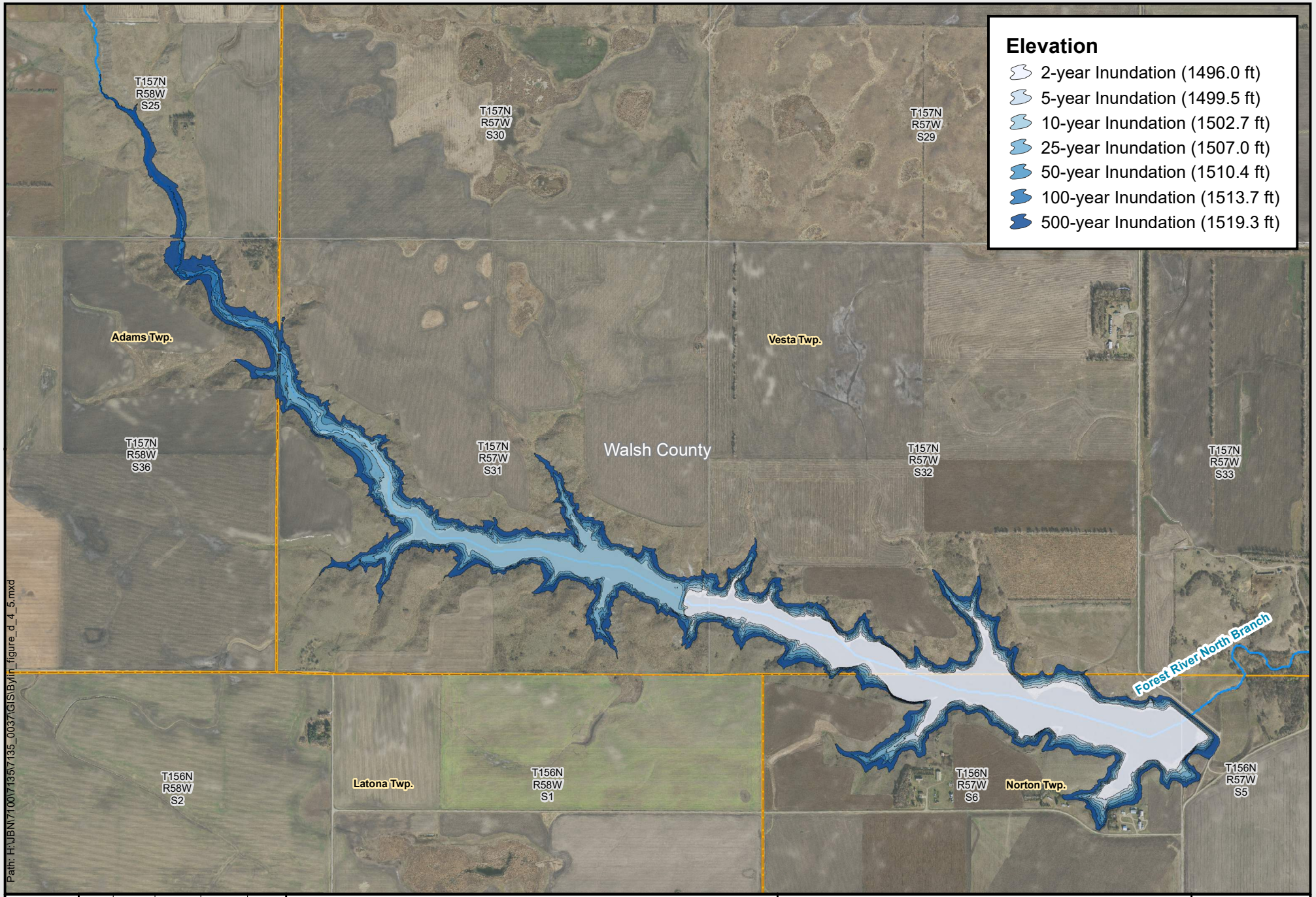

F D-4-5

Scale:	Drawn by:	Checked by:	Project No.:	Date:
AS SHOWN	NRI	PDL	7135-0037	11/24/2021

HOUSTON engineering, inc.

Figure D-4-5: Synthetic Event Reservoir Inundation at Bylin Dam

North Branch Forest River Dam No. 1 (Bylin Dam)
Appendix D-4: Concept Design Report
Walsh County Water Resource District

0 0.25 0.5 Miles

N W E S

ATTACHMENTS

Attachment D-4-1: Preliminary Plan Set
Attachment D-4-2: Principal Spillway Riser Tower Calculations
Attachment D-4-3: Principal Spillway Energy Dissipation Calculations
Attachment D-4-4: Auxiliary Spillway ACB Calculations
Attachment D-4-5: TR 210-60 Peak Breach Discharge Calculations

ATTACHMENT D-4-1: PRELIMINARY PLAN SET

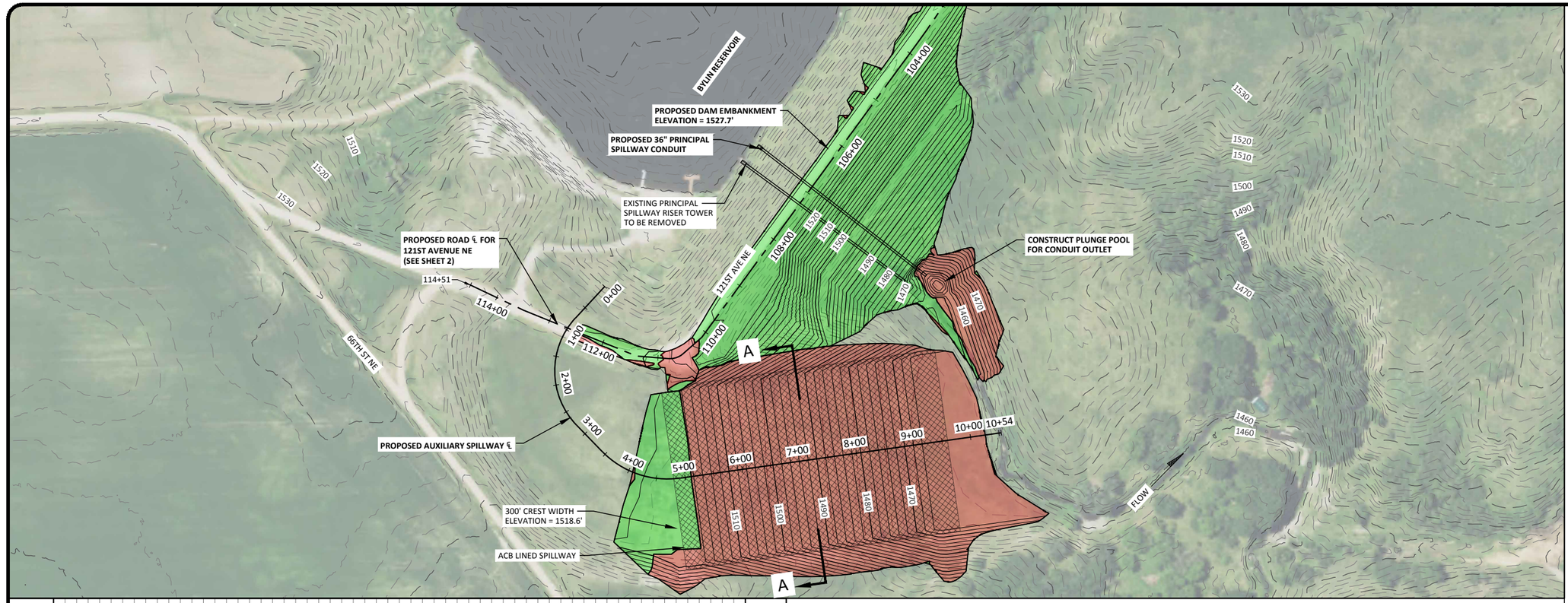

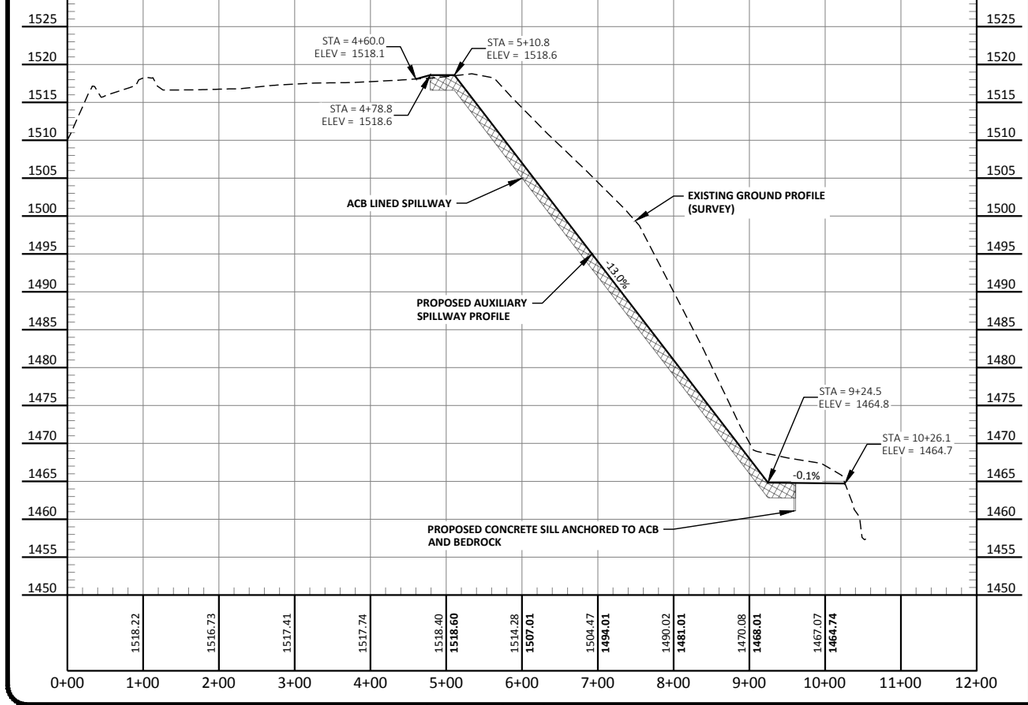

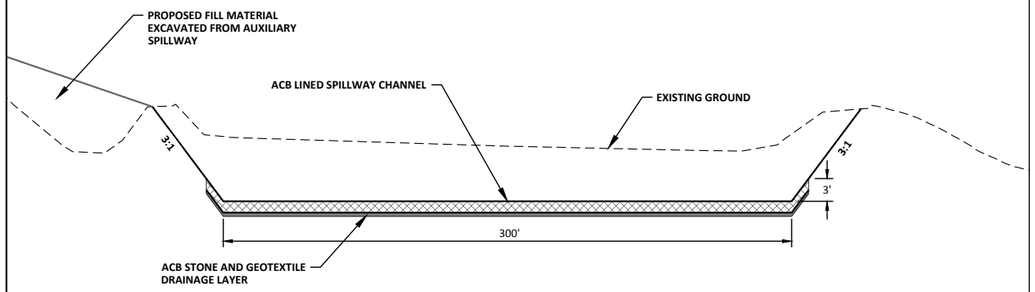

SECTION A-A
NOT TO SCALE

N

100 0 100 200
Scale Feet

NOTES:
1. 2020 NAIP AERIAL IMAGERY
2. ALL ELEVATIONS REFERENCE NAVD 1988 VERTICAL DATUM
3. TOPOGRAPHIC SURVEY DATA COLLECTED IN JULY 2020
4. ARTICULATED CONCRETE BLOCK (ACB) DESIGN BASED ON REQUIREMENTS IN CHAPTER 54, PART 628, NATIONAL ENGINEERING HANDBOOK

CUT
FILL
ACB
ACB DRAINAGE LAYER

PRELIMINARY
NOT FOR CONSTRUCTION

No.	Revision	Date	By

HOUSTON engineering, inc.

Drawn by	Date
RCG, ZCF	2-11-22
Checked by	Scale
PDL	AS SHOWN

BYLIN DAM REVIEW POINT 4
WALSH COUNTY WATER RESOURCE DISTRICT
GRAFTON, ND

AUXILIARY SPILLWAY PLAN & PROFILE
PROJECT NO. 7135-0037

SHEET 1 of 4

H:\JBN\7100\7135\7135_0037\CAD\Plan\0- Proposed P&P ACB Raise Dam 3.9'.dwg-P&P - ACB Spillway Align -2/23/2022 2:23 PM-(rglatt)

HEI NO. 7135-0037

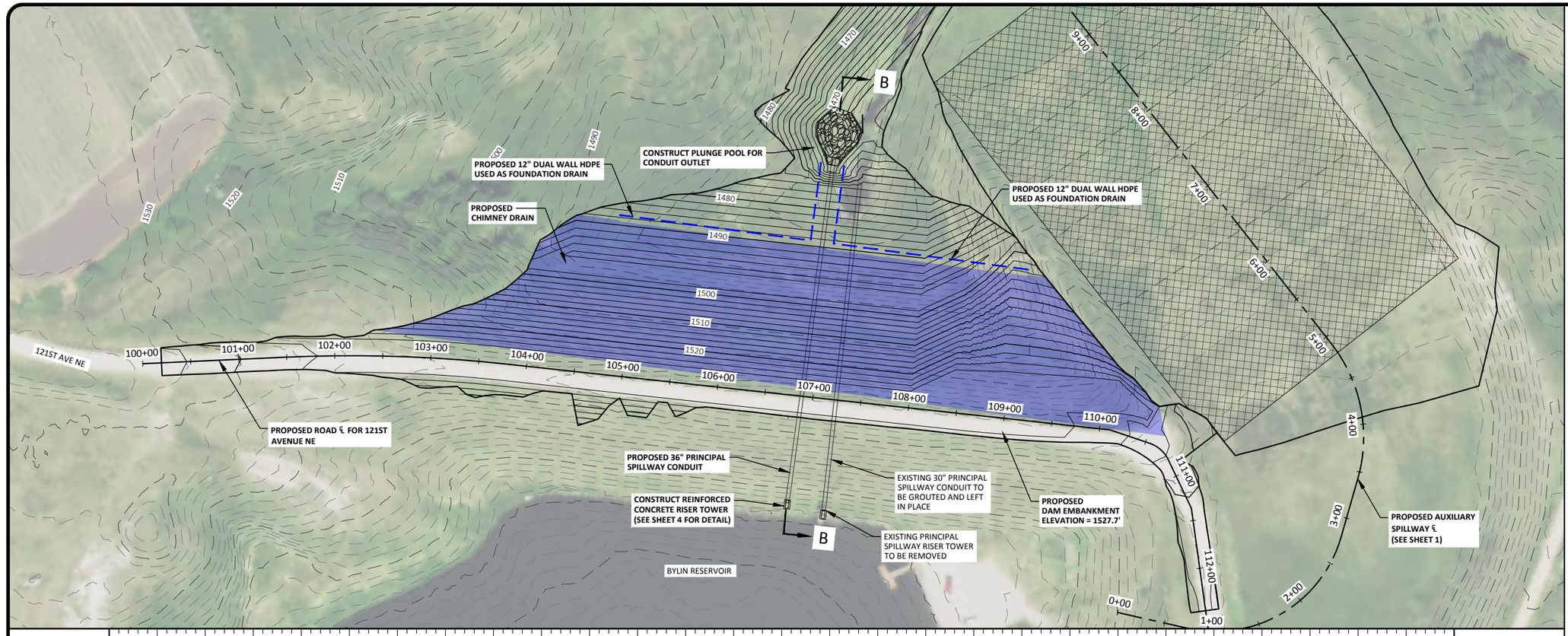

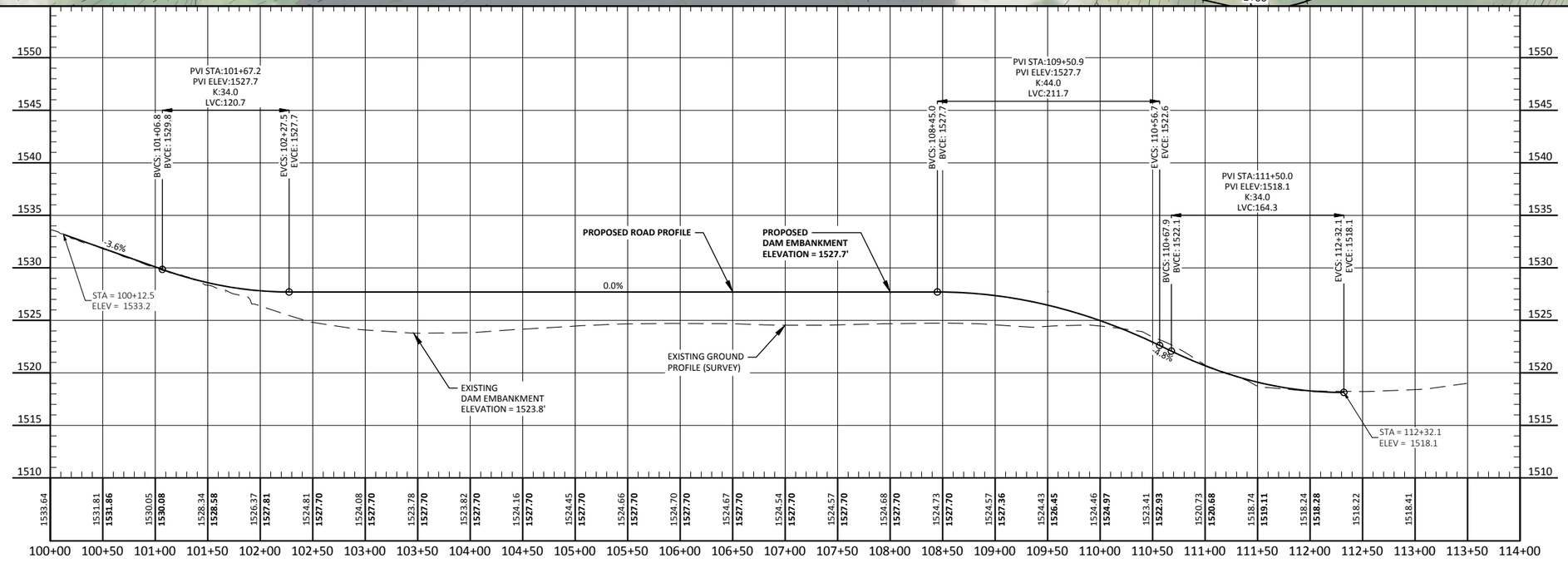

PRELIMINARY
NOT FOR CONSTRUCTION

No.	Revision	Date	By

HOUSTON engineering, inc.

Drawn by	Date
RCG, ZCF	2-11-22
Checked by	Scale
PDL	AS SHOWN

BYLIN DAM REVIEW POINT 4
WALSH COUNTY WATER RESOURCE DISTRICT
GRAFTON, ND

121ST AVE NE
PLAN & PROFILE
PROJECT NO. 7135-0037

SHEET
2 of 4

H:\JBN\7100\7135\7135_0037\CAD\Plan\0- Proposed - Embankment.dwg-Embankment Plan and Profile-2/3/2022 10:14 AM-(rglatt)

HEI NO. 7135-0037

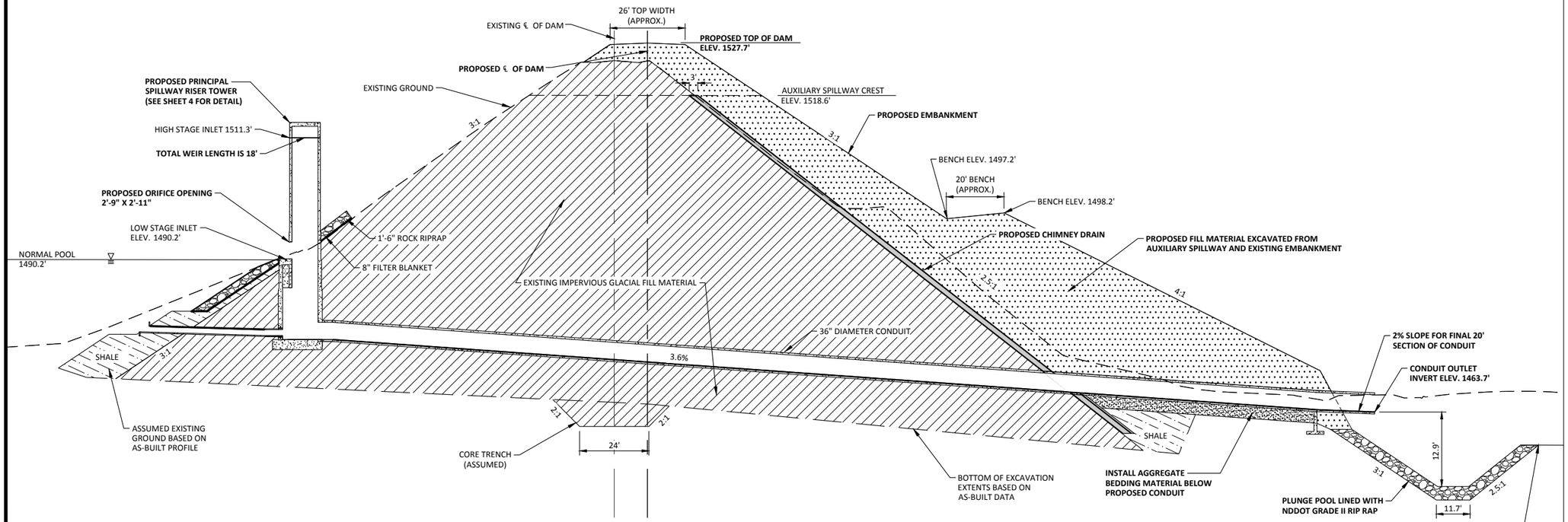

SECTION B-B BYLIN PRINCIPAL SPILLWAY CROSS SECTION

NOT TO SCALE

LEGEND

- SHALE
- IMPERVIOUS GLACIAL FILL MATERIAL
- CONCRETE
- RIPRAP
- PROPOSED FILL MATERIAL EXCAVATED FROM AUXILIARY SPILLWAY
- CHIMNEY DRAIN
- AGGREGATE BEDDING MATERIAL

NOTES:
1. ALL ELEVATIONS REFERENCE NAVD88 VERTICAL DATUM
2. EXISTING EMBANKMENT ELEVATIONS BASED ON AS-BUILT PLANS AND FIELD SURVEY DATA

PRELIMINARY
NOT FOR CONSTRUCTION

No.	Revision	Date	By

HOUSTON engineering, inc.

Drawn by	Date
RCG, ZCF	2-11-22
Checked by	Scale
PDL	AS SHOWN

BYLIN DAM REVIEW POINT 4
WALSH COUNTY WATER RESOURCE DISTRICT
GRAFTON, ND

EMBANKMENT CROSS SECTION
PROJECT NO. 7135-0037

SHEET
3 of 4

HEI NO. 7135-0037

H:\JBN\7100\7135\7135_0037\CAD\Plan\Cross Section at Spillway with 4to1 dwg-Bylin Proposed (2)-2/23/2022 1:57 PM-(rglatt)

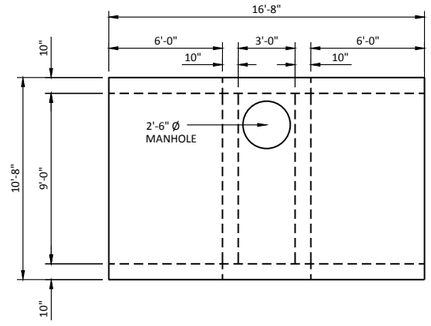

TOP PLAN
NOT TO SCALE

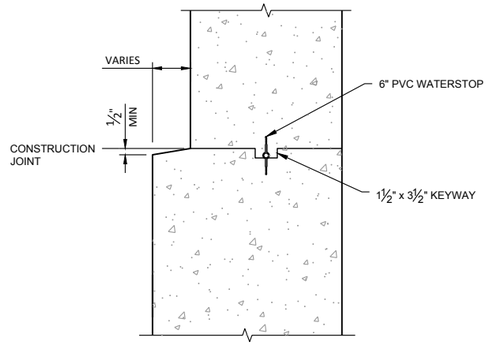

1 WALL JOINT DETAIL

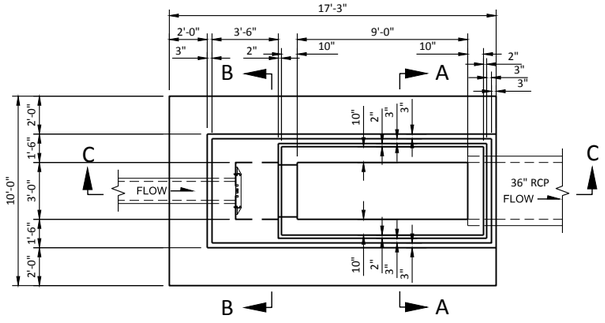

PLAN VIEW
NOTES:

TRASH RACKS NOT SHOWN FOR CLARITY.

CHAMFER ALL EXPOSED EDGES ¾".

T.O.F. = TOP OF FOOTING
B.O.F. = BOTTOM OF FOOTING

NOT TO SCALE

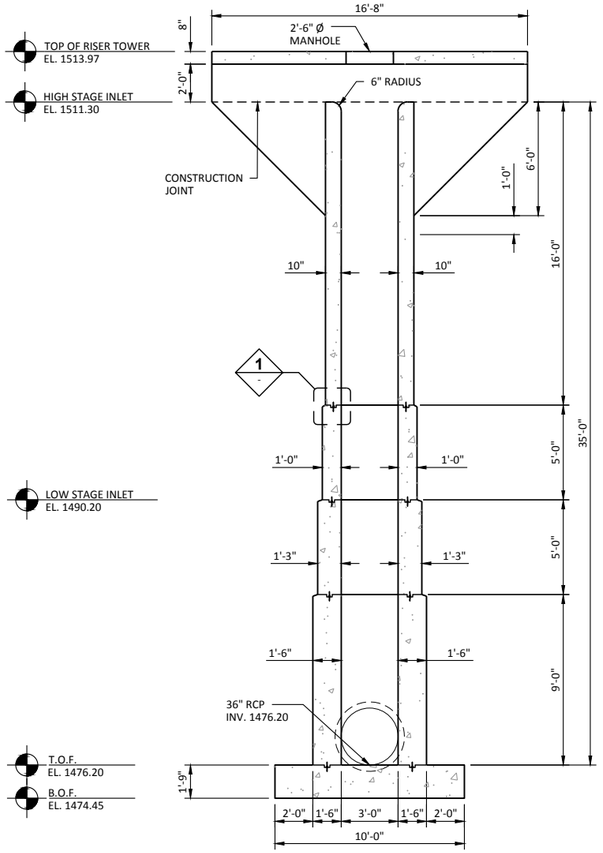

SECTION A-A
NOT TO SCALE

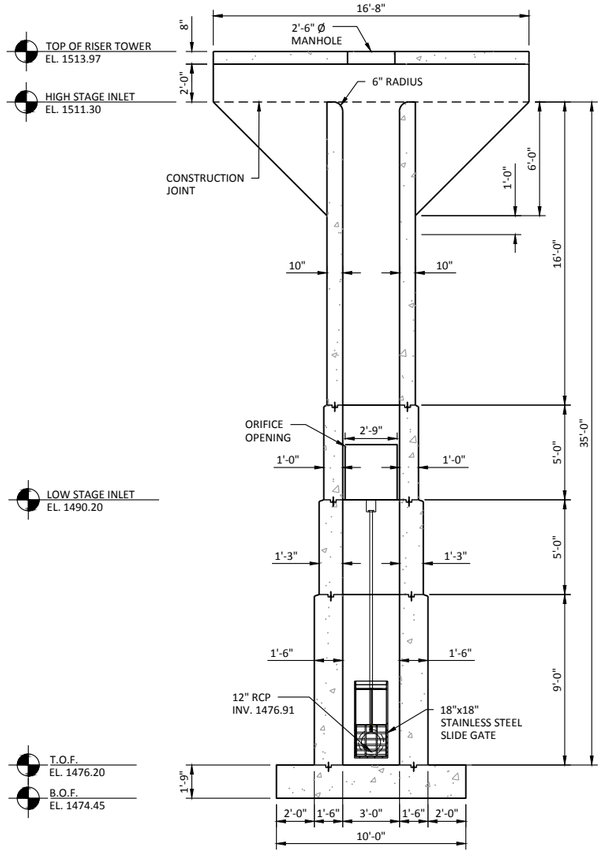

SECTION B-B
NOT TO SCALE

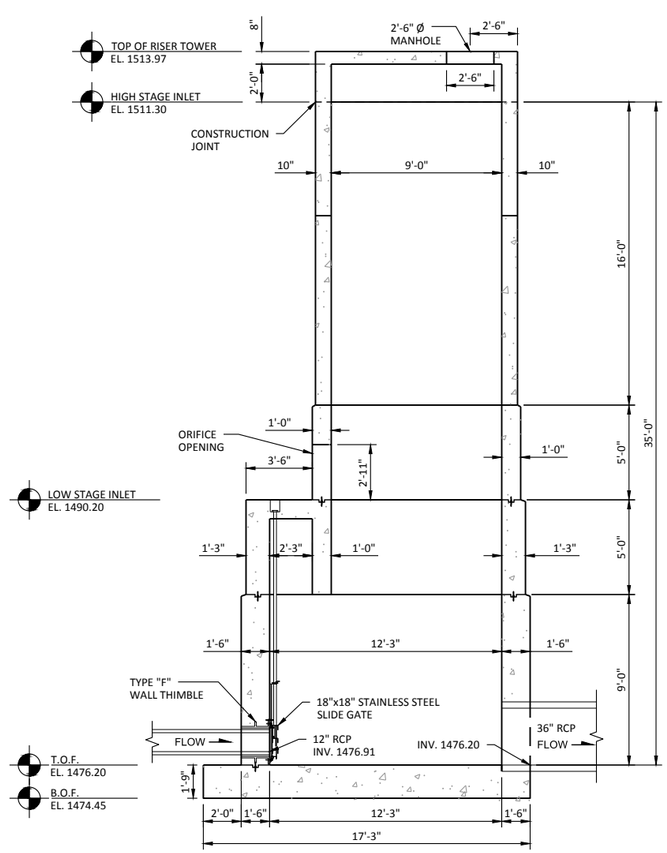

SECTION C-C
NOT TO SCALE

PRELIMINARY
NOT FOR CONSTRUCTION

No.	Revision	Date	By

HOUSTON engineering, inc.

Drawn by	Date
AMK	2-11-22
Checked by	Scale
LJB	AS SHOWN

BYLIN DAM REVIEW POINT 4
WALSH COUNTY WATER RESOURCE DISTRICT
GRAFTON, ND

RISER TOWER PLAN & SECTION VIEWS
PROJECT NO. 7135-0037

SHEET 4 of 4

H:\JBN\7100\7135\7135_0037\CAD\Plan\Riser Tower Plan View.dwg-Layout (1)-2/3/2022 10:17 AM-(rglatt)

HEI NO. 7135-0037

ATTACHMENT D-4-2: PRINCIPAL SPILLWAY RISER TOWER CALCULATIONS

30% Preliminary Design

Design Criteria

NRCS Guidelines for the design criteria of reinforced concrete structures exists in the National Engineering Manual Part 536 - Structural Engineering

According to NEM 536.20 the structural design of reinforced concrete structures is commonly guided by the following publications.

- ASCE 7-16 Minimum Design Loads and Associated Criteria for Buildings and Other Structures
- ACI 318-19 Building Code Requirements for Structural Concrete
- ACI 350-06 Code Requirements for Environmental Engineering Concrete Structures
- TR-210-30 Structural Design of Standard Cover Risers

Riser Tower Data

$D := 36\ in$
$N_{ih} := 35\ ft$
$N_{is} := 19\ ft$
$N_{sh} := 16\ ft$

Riser located in the embankment. [TR-210-30.1-6]
Location of riser wall construction joints (from top of footing):
4.0, 9.0, 14.0, 19.0, 24.0, and 28.0 ft

*Wall thickness increments shall not exceed 3 in. [TR-210-30.1-2]

Material Properties: [TR-210-30.1-2]

$F_c := 4000\ psi$
$w_c := 150\ pcf$

Cover Slab and Cover Slab Walls

Use standard design: [TR-210-30.1-2]

- Cover slab thickness = 8 in.
- Riser wall and cover slab wall thickness = 10 in.
- Top slab live loading = 100 psf

Riser Wall Loading [TR-210-30]

The design of horizontal and vertical sections of riser walls must consider both lateral soil pressure and water pressure loadings. Lateral soil pressures shall be assumed uniformly distributed around the riser for concrete design only (1-2).

It should be noted that for stability analysis, different loading conditions will be analyzed in accordance with TR-210-30, 2-30.

Soil properties provided by Gannett Fleming Geotechnical Engineering Report dated January 20, 2021:

$\theta := 33°$

$\gamma_m := 125\ pcf$

$\gamma_w := 62.5\ pcf$

$\gamma_s := \gamma_m - \gamma_w = 62.5\ pcf$

$K_a := \frac{1-\sin(\theta)}{1+\sin(\theta)} = 0.29$

$K_o := 1-\sin(\theta) = 0.46$

$K_p := \frac{1+\sin(\theta)}{1-\sin(\theta)} = 3.39$

Tests on risers of standard proportions show that the pressure difference may be taken as (Δp/w)/h_{vr} = 6.0 from the crest of the covered inlet of the riser to a distance equal to 1.5D below the crest and the pressure distance is (Δp/w)/h_{vr} = 3.0 below distance 1.5D below the crest, where h_{vr} is the velocity head in the riser (1-3).

For V_b(max) = 30 fps:

Δp/w = 5.76 ft
Δp/w = 2.88 ft

For design purposes, two loading conditions are defined (1-4):

1. Pipe flow - pressures as described above
2. No flow - water surface at the crest of the covered inlet of the riser, lower inlets, if any, assumed plugged.

Finite Element Analysis [ACI 318-19]

Visual Analysis 20.0 a finite element analysis program, was used to model and analyze the standard riser tower. Visual Analysis models structures using 2-dimensional plates with associated material properties and thicknesses. A cursory analysis was performed to check shear forces and wall thickness of the tower. Reinforcement design and supporting calculations will be provided in a future submittal.

Riser Tower Dimensions

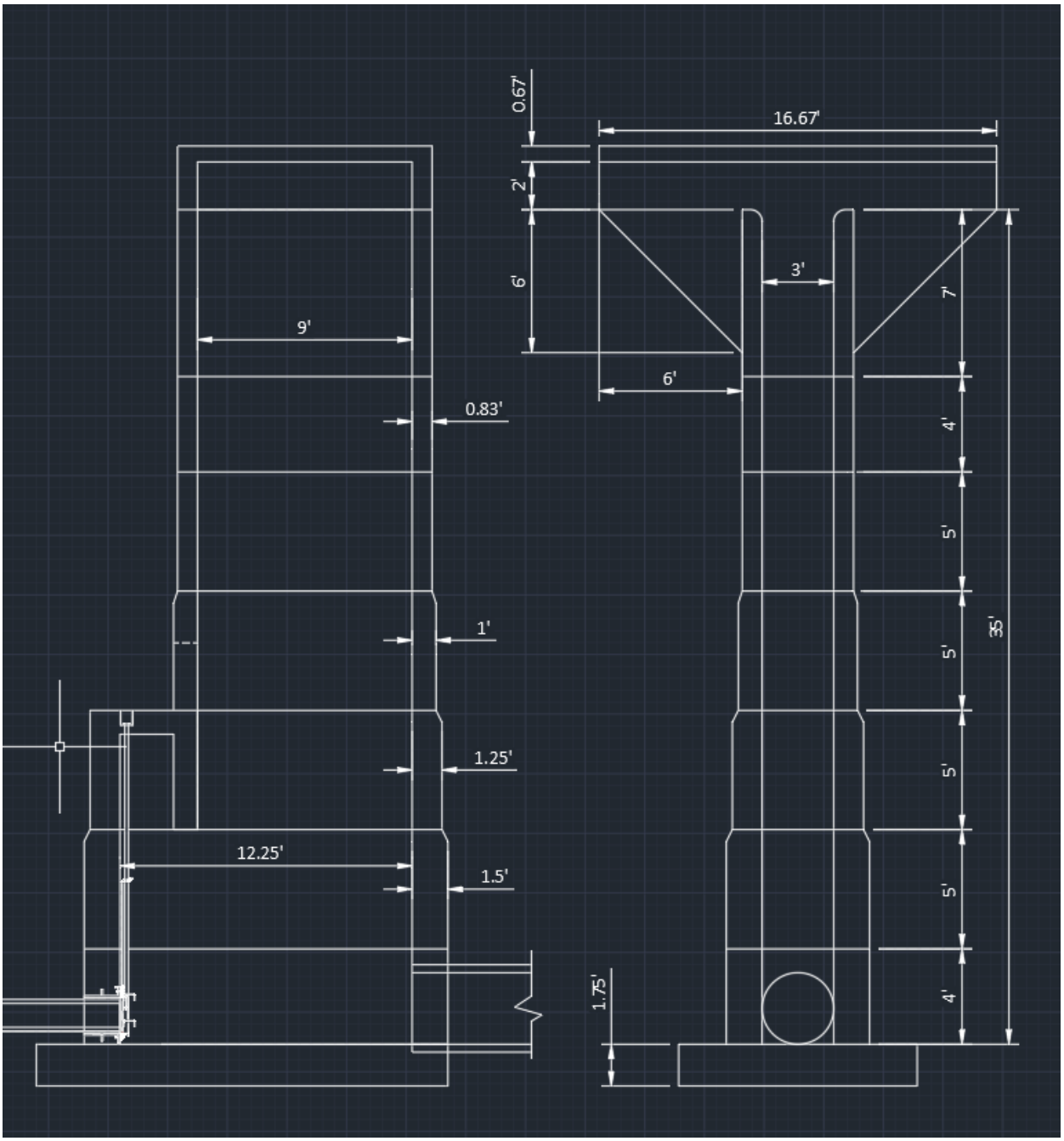

Elevation Views

Riser Tower Dimensions

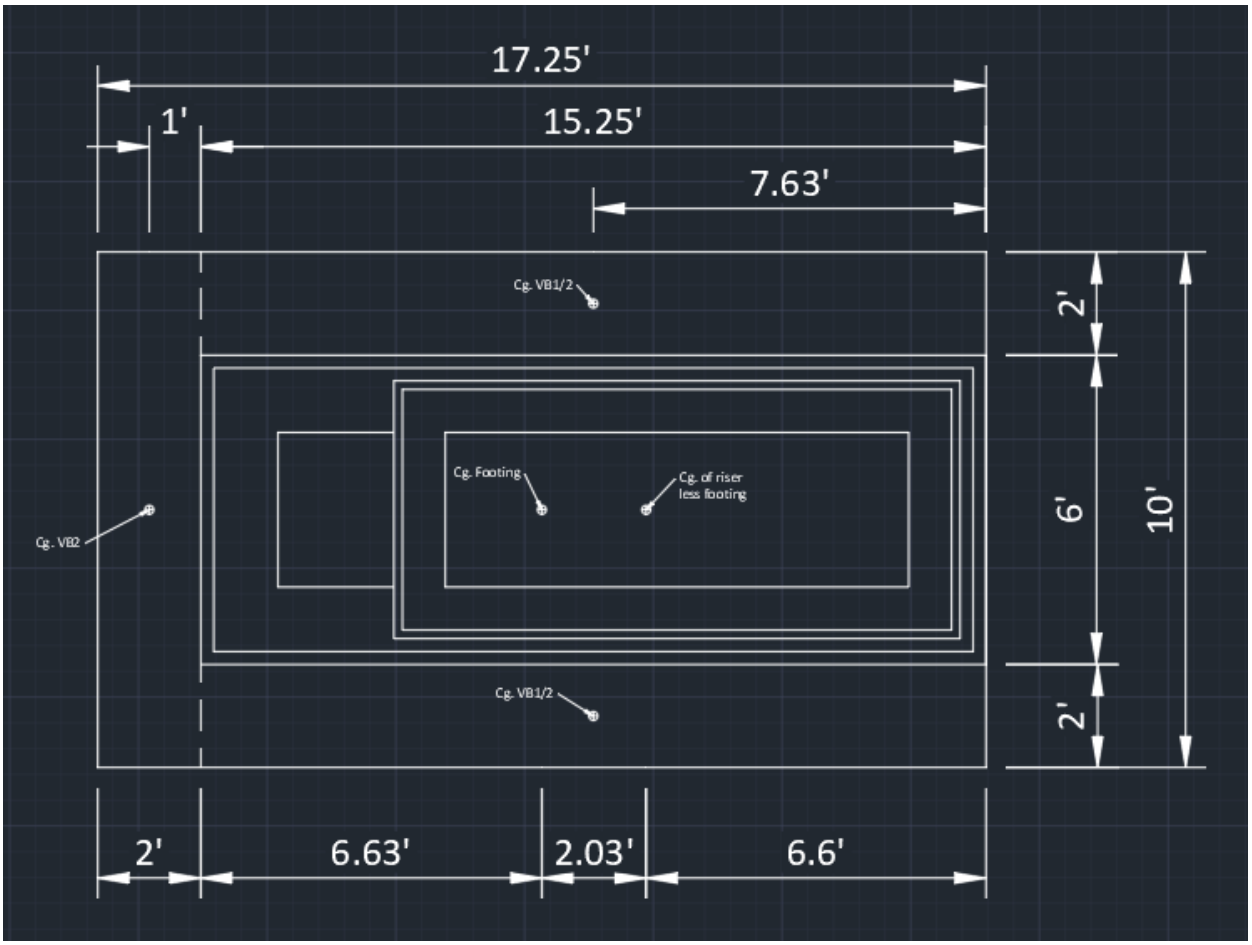

Plan View

Volume and weight - for subsequent computations:

Slab,

$$slab := 16.67\ ft \cdot 9\ ft \cdot \frac{8}{12}\ ft = 100\ ft^3$$

Cover walls,

$$cover_{walls} := 2 \cdot 106.78\ ft^2 \cdot \frac{10}{12}\ ft = 178\ ft^3$$

Riser walls,

$$t_{10} := 16\ ft \cdot \left((10.667\ ft \cdot 4.667\ ft) - (3\ ft \cdot 9\ ft)\right) = 364.53\ ft^3$$

$$t_{12} := 5\ ft \cdot \left((11\ ft \cdot 5\ ft) - (3\ ft \cdot 9\ ft)\right) = 140\ ft^3$$

$$t_{15} := 5\ ft \cdot \left((14.75\ ft \cdot 5.5\ ft) - (3\ ft \cdot 9\ ft)\right) = 270.63\ ft^3$$

$$gate_{wall} := 7.25\ ft^2 \cdot 5.5\ ft = 39.88\ ft^3$$

$$t_{18} := 9\ ft \cdot \left((15.25\ ft \cdot 6\ ft) - (3\ ft \cdot 9\ ft)\right) = 580.5\ ft^3$$

Openings,

$$Low_{inlet} := 2.833\ ft \cdot 2.75\ ft \cdot \frac{12}{12}\ ft = 7.79\ ft^3$$

$$Pipe_{outlet} := \frac{\pi \cdot D^2}{4} \cdot \frac{18}{12}\ ft = 10.6\ ft^3$$

Volume of riser above footing,

$$V_{riser} := slab + cover_{walls} + t_{10} + t_{12} + t_{15} + gate_{wall} + t_{18} - Low_{inlet} - Pipe_{outlet} = 1655.12\ ft^3$$

Weight of riser above footing,

$$W_{riser} := V_{riser} \cdot 150\ pcf = 248.3\ kip$$

Weighted Wall Width:

$$B := \left(\frac{9\ ft \cdot 6\ ft}{35\ ft}\right) + \left(\frac{5\ ft \cdot 5.5\ ft}{35\ ft}\right) + \left(\frac{5\ ft \cdot 5\ ft}{35\ ft}\right) + \left(\frac{16\ ft \cdot 4.667\ ft}{35\ ft}\right) = 5.18\ ft$$

Stability Analysis [TR-210-30]

Following the guidelines in NRCS Technical Release No. 30 - Structural Design of Standard Covered Risers the conditions that shall be considered for stability analysis can be found below.

Riser in the Reservoir Area [TR-210-30.2-31]
The following conditions should be investigated:

1. No sediment, wind on sidewall, moist soil condition.
2. No sediment, no wind, water surface to design sediment surface.
3. No sediment, wind on sidewall, water surface to design sediment surface.
4. No sediment, no wind, water surface to crest of covered inlet.
5. Sediment to design sediment surface, no wind, water surface to design sediment surface.
6. Sediment to design sediment surface, no wind, water surface to crest of covered inlet.
7. Sediment to design sediment surface, no wind, water surface to bottom of cover slab (riser primed)
8. The flotation criteria.

Riser in the Embankment [TR-210-30.2-32]
The following conditions should be investigated:

1. Embankment present, moist soil condition
2. Embankment present, water surface to embankment surface
3. Embankment present, water surface to crest of covered inlet
4. Embankment present, water surface to bottom of cover slab (riser primed)
5. No embankment placed, moist soil condition
6. The flotation criteria

Because the proposed riser tower structure will not be fully constructed within the reservoir or the embankment, it meets both criteria when checking stability. Many of the required load cases do not apply and can be omitted from analysis. In coordination with the NRCS the required load cases for the proposed riser tower were simplified into the conditions below.

Riser (Combined)
The following conditions should be investigated:

1. Embankment present, wind on sidewall, moist soil condition
2. Embankment present, wind on sidewall, water surface to embankment surface
3. Embankment present, no wind, water surface to crest of covered inlet
4. Embankment present, no wind, water surface to bottom of cover slab (riser primed)
5. No embankment placed, wind on sidewall, moist soil condition
6. The flotation criteria

Stability Analysis continued.. [TR-210-30]

Embankment Load on Riser

Assume the difference between upstream and downstream lateral earth pressures acting on the end wall of the structure:

Lateral earth pressures for moist conditions as k_{wm} = 50 pcf
Lateral earth pressures for saturated conditions as k_{wb} = 30 pcf

Unit soil weights for moist or saturated conditions as w_m = w_s = 140 pcf. Neglect friction which may act on the side-walls. [TR-210-30.1-5]

Wind Load

Risers located in the reservoir area shall be designed for wind acting over the entire sidewall using 50 pounds per square foot of pressure. [TR-210-30.1-6]

Risk Category 1, Exposure C [ASCE 7-16 26.10.2]

Wind Speed: $V := 105\ mph$
Wind Directionality Factor: $K_d := 0.90$
Velocity Pressure Coefficient: $K_z := 0.98$
Topographic Factor: $K_{zt} := 1.0$
Ground Elevation Factor: $K_e := 1.0$

Velocity Pressure: $$q_z := \left(0.00256 \cdot K_z \cdot K_{zt} \cdot K_d \cdot K_e \cdot V^2\right) \cdot \left(\frac{1}{mph^2}\right) \cdot \left(\frac{lb}{ft^2}\right) = 24.9\ \frac{lb}{ft^2}$$

$50\ psf > q_z$

Assume, $W_{LL} := 50\ psf$

Wind Load on End Wall

During the construction phase when no embankment is present, the most conservative wind load will be acting with the negative moment on the footing caused by the dead load of the riser tower. The wind projection is the vertical distance between the top of footing and the top of the riser tower.

$$A_{wall.x} := \left(B \cdot N_{ih}\right) + \left(2 \cdot \left(\frac{1}{2} \cdot 6\ ft \cdot 6\ ft\right)\right) + \left(16.67\ ft \cdot 2.67\ ft\right) = 261.68\ ft^2$$

$cg_{wall.x} := 22.13\ ft$

$$M_{wind.x} := -\left(W_{LL} \cdot A_{wall.x} \cdot cg_{wall.x}\right) = -289.55\ ft \cdot kip$$

Stability Analysis continued.. [TR-210-30]

Wind Load on End Wall (Embankment)

For stability analysis, the most conservative moment acting on the footing for both moist and saturated soil conditions is the combined reaction caused by wind load and the embankment loading on the structure. The wind projection is the vertical distance between the surface of the backfill and the top of the riser tower.

$$A_{wall.emb.x} := \left(N_{sh} \cdot 4.67\ ft\right) + \left(2 \cdot \left(\frac{1}{2} \cdot 6\ ft \cdot 6\ ft\right)\right) + \left(16.67\ ft \cdot 2.67\ ft\right) = 155.23\ ft^2$$

$$cg_{wall.emb.x} := 31.06\ ft$$

$$M_{wind.emb.x} := W_{LL} \cdot A_{wall.emb.x} \cdot cg_{wall.emb.x} = 241.07\ ft \cdot kip$$

Wind Load on Side Wall

During the construction phase when no embankment is present, wind load acting on the side of the structure must be checked for overturning. The wind projection is the vertical distance between the top of footing and the top of the riser tower.

$$A_{wall.y} := \left(15.25\ ft \cdot 9\ ft\right) + \left(14.75\ ft \cdot 5\ ft\right) + \left(11\ ft \cdot 5\ ft\right) + \left(10.67\ ft \cdot 16\ ft\right) = 436.72\ ft^2$$

$$cg_{wall.y} := 15.94\ ft$$

$$M_{wind.y} := W_{LL} \cdot A_{wall.y} \cdot cg_{wall.y} = 348.07\ ft \cdot kip$$

Wind Load on Side Wall (Embankment)

The structure will be backfilled uniformly around the sides of the structure. Without the added moment from embankment, the condition where the wind load is projected on the end wall of the structure will govern. By inspection, this load case would not control, therefore, was omitted from analysis.

$$A_{wall.emb.y} := \left(10.67\ ft \cdot 16\ ft\right) = 170.72\ ft^2$$

$$cg_{wall.emb.y} := 27\ ft$$

$$M_{wind.emb.y} := W_{LL} \cdot A_{wall.emb.y} \cdot cg_{wall.emb.y} = 230.47\ ft \cdot kip$$

Stability Analysis continued.. [TR-210-30]

Volume outside riser walls but inside projected area 15.25'x6' the maximum section:
Between footing and earth surface,

$$(5\ ft)\ (91.5\ ft^2 - 55\ ft^2) = 182.5\ ft^3$$

$$(5\ ft)\ (91.5\ ft^2 - 81.125\ ft^2) = 51.88\ ft^3$$

$$(9\ ft)\ (91.5\ ft^2 - 91.5\ ft^2) = 0\ ft^3$$

$$V_1 := 182.5\ ft^3 + 51.88\ ft^3 + 0\ ft^3 = 234.38\ ft^3$$

Between earth surface and crest of inlet, (to be conservative, neglect slab walls)

$$V_2 := (16\ ft)\ (91.5\ ft^2 - 49.78\ ft^2) = 667.52\ ft^3$$

Displacement volume Vd of riser between footing and crest of covered inlet,

slab walls, $4 \cdot (0.5 \cdot 6\ ft \cdot 6\ ft) \cdot \frac{10}{12}\ ft = 60\ ft^3$

$$16\ ft \cdot (10.667\ ft \cdot 4.667\ ft) = 796.53\ ft^3$$

$$5\ ft \cdot (11\ ft \cdot 5\ ft) = 275\ ft^3$$

$$5\ ft \cdot (14.75\ ft \cdot 5.5\ ft) = 405.63\ ft^3$$

$$9\ ft \cdot (15.25\ ft \cdot 6\ ft) = 823.50\ ft^3$$

$$V_d := 60\ ft^3 + 796.53\ ft^3 + 275\ ft^3 + 405.63\ ft^3 + 823.50\ ft^3 = (2.36 \cdot 10^3)\ ft^3$$

Footing,

- Area: $A_f := 17.25\ ft \cdot 10\ ft = 172.5\ ft^2$ $\quad footing_{thk} := \frac{21}{12}\ ft$
- Volume: $V_f := 172.5\ ft^2 \cdot 1.75\ ft = 301.88\ ft^3$
- Weight: $W_f := V_f \cdot 150\ pcf = 45.3\ kip$

Various working volumes,

$$V_{B1} := N_{is} \cdot (15.25\ ft \cdot 2\ ft) \cdot 2 = 1159\ ft^3 \qquad V_{B2} := N_{is} \cdot (10\ ft \cdot 2\ ft) = 380\ ft^3$$

$$V'_{B1} := N_{sh} \cdot (15.25\ ft \cdot 2\ ft) \cdot 2 = 976\ ft^3 \qquad V'_{B2} := N_{sh} \cdot (10\ ft \cdot 2\ ft) = 320\ ft^3$$

(1) Embankment present, wind on sidewall, moist soil conditions:

Allowable avg. pressure: $P_{avg.all.1} := 140\ pcf \cdot \left(N_{is} + footing_{thk}\right) + 2\ ksf = 4.91\ ksf$

Allowable maximum pressure: $P_{max.all.1} := 140\ pcf \cdot \left(N_{is} + footing_{thk}\right) + 4\ ksf = 6.91\ ksf$

Embankment Moment: [TR-210-30]

The moment may be computed as indicated by Figure 2-17. Thus:

$M = \frac{1}{2} F h_s = 0.0125\ B h_s^3$ ft kips

where

B = width of endwall, ft (for convenience, use some constant "weighted" width)

h_s = as previously defined, ft

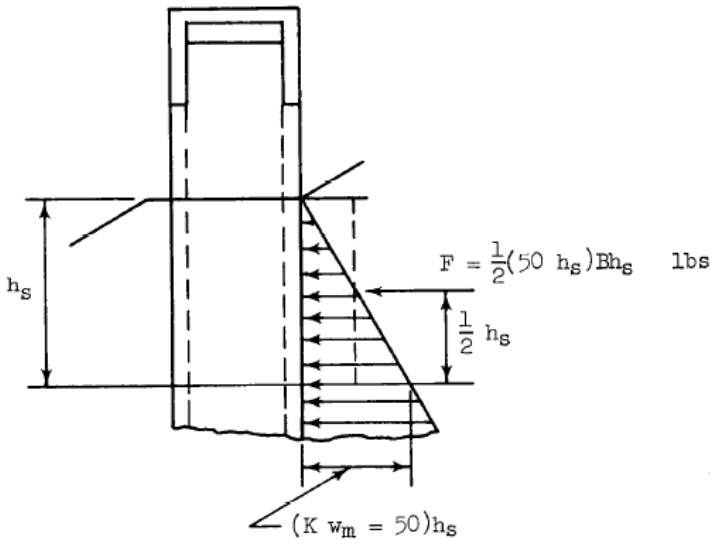

Figure 2-17. Assumed embankment loading.

$$M_{emb.} := \left(\frac{1}{2}\left(\frac{1}{2}\ 50\ pcf\right)\right) \cdot B \cdot \left(N_{is} + footing_{thk}\right)^3 = 578.08\ ft \cdot kip$$

$W_{riser} = 248.27\ kip$ $M_{riser} := W_{riser} \cdot -2.03\ ft$

$W_f = 45.28\ kip$ $M_{footing} := W_f \cdot 0\ ft$

$W_{V1} := V_1 \cdot 140\ pcf$ $M_{V1} := W_{V1} \cdot -2.03\ ft$

$W_{VB1} := V_{B1} \cdot 140\ pcf$ $M_{VB1} := W_{VB1} \cdot -1.0\ ft$

$W_{VB2} := V_{B2} \cdot 140\ pcf$ $M_{VB2} := W_{VB2} \cdot 7.63\ ft$

$W_{total.1} := W_{riser} + W_f + W_{V1} + W_{VB1} + W_{VB2} = 541.82\ kip$

$M_{total.1} := M_{riser} + M_{footing} + M_{V1} + M_{VB1} + M_{VB2} = -326.94\ ft \cdot kip$

Moment about centerline of footing:

$M_{CL1} := M_{emb.} + M_{wind.emb.x} + M_{total.1} = 492.21\ ft \cdot kip$

$$P_{max.1} := \left(\frac{W_{total.1}}{A_f}\right)\left(1 + \left(\frac{\langle 6 \cdot M_{CL1}\rangle}{17.25\ ft \cdot W_{total.1}}\right)\right) = 4.13\ ksf$$

$test.P_{max.1} := \text{if}\left(P_{max.1} < P_{max.all.1}, \text{“OK”}, \text{“NG”}\right) = \text{“OK”}$

$$P_{avg.1} := \frac{W_{total.1}}{A_f} = 3.14\ ksf$$

$test.P_{avg.1} := \text{if}\left(P_{avg.1} < P_{avg.all.1}, \text{“OK”}, \text{“NG”}\right) = \text{“OK”}$

$$P_{min.1} := \left(\frac{W_{total.1}}{A_f}\right)\left(1 - \left(\frac{\langle 6 \cdot M_{CL1}\rangle}{17.25\ ft \cdot W_{total.1}}\right)\right) = 2.15\ ksf$$

$test.P_{min.1} := \text{if}\left(P_{min.1} > 0, \text{“OK”}, \text{“NG”}\right) = \text{“OK”}$

(2) Embankment present, wind on sidewall, water surface to embankment:

Allowable avg. pressure: $P_{avg.all.2} := 140\ pcf \cdot (N_{is} + footing_{thk}) + 1\ ksf = 3.91\ ksf$

Allowable maximum pressure: $P_{max.all.2} := 140\ pcf \cdot (N_{is} + footing_{thk}) + 2\ ksf = 4.91\ ksf$

$$M_2 := \left(\frac{30\ pcf}{50\ pcf}\right)(M_{emb.}) = 346.8\ ft \cdot kip$$

Moment about centerline of footing:

$$M_{CL2} := M_2 + M_{wind.emb.x} + M_{total.1} = 261\ ft \cdot kip$$

$$P_{max.2} := \left(\frac{W_{total.1}}{A_f}\right)\left(1 + \left(\frac{(6 \cdot M_{CL2})}{17.25\ ft \cdot W_{total.1}}\right)\right) = 3.67\ ksf$$

$$test.P_{max.2} := \text{if}\left(P_{max.2} < P_{max.all.2}, \text{“OK”}, \text{“NG”}\right) = \text{“OK”}$$

$$P_{avg.2} := \frac{W_{total.1}}{A_f} = 3.14\ ksf$$

$$test.P_{avg.2} := \text{if}\left(P_{avg.2} < P_{avg.all.2}, \text{“OK”}, \text{“NG”}\right) = \text{“OK”}$$

$$P_{min.2} := \left(\frac{W_{total.1}}{A_f}\right)\left(1 - \left(\frac{(6 \cdot M_{CL2})}{17.25\ ft \cdot W_{total.1}}\right)\right) = 2.61\ ksf$$

$$test.P_{min.2} := \text{if}\left(P_{min.2} > 0, \text{“OK”}, \text{“NG”}\right) = \text{“OK”}$$

$$P_{uplift.2} := 62.4\ pcf \cdot (N_{is} + footing_{thk}) = 1.29\ ksf$$

$$P_{net.2} := P_{min.2} - P_{uplift.2} = 1.32\ ksf$$

$$test.P_{net.2} := \text{if}\left(P_{net.2} > 0, \text{“OK”}, \text{“NG”}\right) = \text{“OK”}$$

(3) Embankment present, water surface to crest of inlet:

Allowable avg. pressure: $P_{avg.all.3} := 3.91\ ksf + (N_{sh} \cdot 62.4\ pcf) = 4.91\ ksf$

Allowable maximum pressure: $P_{max.all.3} := 4.91\ ksf + (N_{sh} \cdot 62.4\ pcf) = 5.91\ ksf$

Previous: $W_{total.1} = 541.82\ kip$ $M_{total.1} = -326.94\ ft \cdot kip$

$W_{V2} := V_2 \cdot 62.4\ pcf$ $M_{V2} := W_{V2} \cdot -2.03\ ft$

$W_{V'B1} := V'_{B1} \cdot 62.4\ pcf$ $M_{V'B1} := W_{V'B1} \cdot -1.0\ ft$

$W_{V'B2} := V'_{B2} \cdot 62.4\ pcf$ $M_{V'B2} := W_{V'B2} \cdot 7.63\ ft$

$W_{total.3} := W_{total.1} + W_{V2} + W_{V'B1} + W_{V'B2} = 664.35\ kip$

$M_{total.3} := M_{total.1} + M_{V2} + M_{V'B1} + M_{V'B2} = -320.04\ ft \cdot kip$

Moment about centerline of footing:

$M_{CL3} := M_2 + M_{total.3} = 26.8\ ft \cdot kip$

$$P_{max.3} := \left(\frac{W_{total.3}}{A_f}\right)\left(1 + \left(\frac{(6 \cdot M_{CL3})}{17.25\ ft \cdot W_{total.3}}\right)\right) = 3.91\ ksf$$

$test.P_{max.3} := \text{if}\left(P_{max.3} < P_{max.all.3}, \text{“OK”}, \text{“NG”}\right) = \text{“OK”}$

$$P_{avg.3} := \frac{W_{total.3}}{A_f} = 3.85\ ksf$$

$test.P_{avg.3} := \text{if}\left(P_{avg.3} < P_{avg.all.3}, \text{“OK”}, \text{“NG”}\right) = \text{“OK”}$

$$P_{min.3} := \left(\frac{W_{total.3}}{A_f}\right)\left(1 - \left(\frac{(6 \cdot M_{CL3})}{17.25\ ft \cdot W_{total.3}}\right)\right) = 3.80\ ksf$$

$test.P_{min.3} := \text{if}\left(P_{min.3} > 0, \text{“OK”}, \text{“NG”}\right) = \text{“OK”}$

$P_{uplift.3} := 62.4\ pcf \cdot (N_{sh} + N_{is} + footing_{thk}) = 2.29\ ksf$

$P_{net.3} := P_{min.3} - P_{uplift.3} = 1.50\ ksf$

$test.P_{net.3} := \text{if}\left(P_{net.3} > 0, \text{“OK”}, \text{“NG”}\right) = \text{“OK”}$

(4) Embankment present, water surface to bottom of cover slab (riser primed):

Allowable avg. pressure: $P_{avg.all.4} := 3.91\ ksf + \left(\left(N_{sh} + 2\ ft\right) \cdot 62.4\ pcf\right) = 5.03\ ksf$

Allowable maximum pressure: $P_{max.all.4} := 4.91\ ksf + \left(\left(N_{sh} + 2\ ft\right) \cdot 62.4\ pcf\right) = 6.03\ ksf$

Previous: $W_{total.3} = 664.35\ kip$ $M_{total.3} = -320.04\ ft \cdot kip$

$W_{water.riser} := \left(\left(35\ ft \cdot 9\ ft \cdot 3\ ft\right) + \left(14\ ft \cdot 3.25\ ft \cdot 3\ ft\right)\right)\left(62.4\ pcf\right) = 67.5\ kip$

$M_{water.riser} := \left(67.5\ kip \cdot -2.03\ ft\right) = -137.025\ ft \cdot kip$

$W_{water.crest} := \left(A_f \cdot 2\ ft\right)\ \left(62.4\ pcf\right) = 21.5\ kip$

$M_{water.crest} := 21.5\ kip \cdot 0\ ft = 0\ ft \cdot kip$

$W_{displaced.water} := \left(-\left(16.667\ ft \cdot 2\ ft \cdot .833 \cdot ft\right) \cdot 2\right) \cdot 62.4\ pcf = -3.5\ kip$

$M_{displaced.water} := -3.5\ kip \cdot -2.03\ ft = 7.11\ ft \cdot kip$

$W_{total.4} := W_{total.3} + W_{water.riser} + W_{water.crest} + W_{displaced.water} = 749.89\ kip$

$M_{total.4} := M_{total.3} + M_{water.riser} + M_{water.crest} + M_{displaced.water} = -449.96\ ft \cdot kip$

Moment about centerline of footing:

$M_{CL4} := M_2 + M_{total.4} = -103.1\ ft \cdot kip$

$P_{max.4} := \left(\frac{W_{total.4}}{A_f}\right)\left(1 + \left(\frac{\left(6 \cdot -M_{CL4}\right)}{17.25\ ft \cdot W_{total.4}}\right)\right) = 4.56\ ksf$

$test.P_{max.4} := \text{if}\left(P_{max.4} < P_{max.all.4}, \text{“OK”}, \text{“NG”}\right) = \text{“OK”}$

$P_{avg.4} := \frac{W_{total.4}}{A_f} = 4.35\ ksf$

$test.P_{avg.4} := \text{if}\left(P_{avg.4} < P_{avg.all.4}, \text{“OK”}, \text{“NG”}\right) = \text{“OK”}$

$P_{min.4} := \left(\frac{W_{total.4}}{A_f}\right)\left(1 - \left(\frac{\left(6 \cdot -M_{CL4}\right)}{17.25\ ft \cdot W_{total.4}}\right)\right) = 4.14\ ksf$

$test.P_{min.4} := \text{if}\left(P_{min.4} > 0, \text{“OK”}, \text{“NG”}\right) = \text{“OK”}$

$$P_{uplift.4} := 62.4\ pcf \cdot \left(2\ ft + N_{ih} + footing_{thk}\right) = 2.42\ ksf$$

$$P_{net.4} := P_{min.4} - P_{uplift.4} = 1.72\ ksf$$

$$test.P_{net.4} := \text{if}\left(P_{net.4} > 0, \text{“OK”}, \text{“NG”}\right) = \text{“OK”}$$

(5) No embankment placed, wind on sidewall, moist soil condition:

Allowable avg. pressure: $P_{avg.all.5} := 0 + 2\ ksf = 2\ ksf$

Allowable maximum pressure: $P_{max.all.5} := 0 + 4\ ksf = 4\ ksf$

$W_{riser} = 248.27\ kip$ $M_{riser} = -503.98\ ft \cdot kip$

$W_f = 45.28\ kip$ $M_{footing} = 0\ ft \cdot kip$

$M_{wind.x} = -289.55\ ft \cdot kip$

$M_{wind.y} = 348.07\ ft \cdot kip$

$$W_{total.5} := W_{riser} + W_f = 293.55\ kip$$

Moment about centerline of footing:

$$M_{CL5.x} := M_{riser} + M_{footing} + M_{wind.x} = -793.53\ ft \cdot kip$$

$$P_{max.5.x} := \left(\frac{W_{total.5}}{A_f}\right)\left(1 + \left(\frac{\left(6 \cdot -M_{CL5.x}\right)}{17.25\ ft \cdot W_{total.5}}\right)\right) = 3.30\ ksf$$

$$test.P_{max.5.x} := \text{if}\left(P_{max.5.x} < P_{max.all.5}, \text{“OK”}, \text{“NG”}\right) = \text{“OK”}$$

$$P_{avg.5.x} := \frac{W_{total.5}}{A_f} = 1.70\ ksf$$

$$test.P_{avg.5.x} := \text{if}\left(P_{avg.5.x} < P_{avg.all.5}, \text{“OK”}, \text{“NG”}\right) = \text{“OK”}$$

$$P_{min.5.x} := \left(\frac{W_{total.5}}{A_f}\right)\left(1 - \left(\frac{\left(6 \cdot -M_{CL5.x}\right)}{17.25\ ft \cdot W_{total.5}}\right)\right) = 0.10\ ksf$$

$$test.P_{min.5.x} := \text{if}\left(P_{min.5.x} > 0, \text{“OK”}, \text{“NG”}\right) = \text{“OK”}$$

Moment about centerline of footing:

$$M_{CL5.y} := M_{wind.y} = 348.07\ ft \cdot kip$$

$$P_{max.5.y} := \left(\frac{W_{total.5}}{A_f}\right)\left(1 + \left(\frac{\left(6 \cdot M_{CL5.y}\right)}{10\ ft \cdot W_{total.5}}\right)\right) = 2.91\ ksf$$

$$test.P_{max.5.y} := \text{if}\left(P_{max.5.y} < P_{max.all.5}, \text{“OK”}, \text{“NG”}\right) = \text{“OK”}$$

$$P_{avg.5.y} := \frac{W_{total.5}}{A_f} = 1.70\ ksf$$

$$test.P_{avg.5.y} := \text{if}\left(P_{avg.5.y} < P_{avg.all.5}, \text{“OK”}, \text{“NG”}\right) = \text{“OK”}$$

$$P_{min.5.y} := \left(\frac{W_{total.5}}{A_f}\right)\left(1 - \left(\frac{\left(6 \cdot M_{CL5.y}\right)}{10\ ft \cdot W_{total.5}}\right)\right) = 0.49\ ksf$$

$$test.P_{min.5.y} := \text{if}\left(P_{min.5.y} > 0, \text{“OK”}, \text{“NG”}\right) = \text{“OK”}$$

(6) Flotation:

Flotation Criteria [TR-210-30.1-6]

When the riser is located in the reservoir area, the ratio of the weight of the riser to the weight of the volume of displaced water by the riser shall not be less than 1.5. Low stage inlet(s), if any, shall be assumed plugged for this computation.

When the riser is located in the embankment, same as 1, but add to the weight of the riser, the buoyant weight of the submerged fill over the riser footing projections. Take the buoyant weight as w_b = 50 pcf.

Because the riser tower fits both criteria of being in the reservoir and in the embankment the buoyant weight of submerged fill over footing projections will not count unless needed.

$$Res. := \frac{W_{riser}}{\left(V_d + V_f\right) \cdot 62.4\ pcf} = 1.49 \qquad Emb. := \frac{W_{riser} + \left(\left(V_1 + V_{B1} + V_{B2}\right) \cdot 50\ pcf\right)}{\left(V_d + V_f\right) \cdot 62.4\ pcf} = 2.03$$

$$F.S. := \begin{array}{l} \text{if } Res. > 1.5 \\ \quad \| \ Res. \\ \text{else} \\ \quad \| \ Emb. \end{array} \qquad \text{if}\left(F.S. > 1.5, \text{“OK”}, \text{“FAIL”}\right) = \text{“OK”}$$

ATTACHMENT D-4-3: PRINCIPAL SPILLWAY ENERGY DISSIPATION CALCULATIONS

HOUSTON engineering, inc.

Principal Spillway Energy Dissipation Calculations

Riprap Lined Plunge Pool for Cantilever Outlet

Created By: Rachel Glatt
Checked By: Paul LeClaire

1. *Compute* $\frac{Q}{\sqrt{gD^5}}$

   a. $\frac{Q}{\sqrt{gD^5}}$ = dimensionless parameter used to determine adequacy of bed material size

   $$\frac{Q}{\sqrt{gD^5}} = \frac{184.88}{\sqrt{32.2*3^5}} = \mathbf{2.09}$$

   where *Q = conduit discharge (cfs),*

   g = acceleration of gravity,

   and *D = conduit diameter (ft)*

2. *Compute* V_o

   a. V_o= conduit discharge velocity

   $$V_o = \frac{4Q}{\pi D^2} = \frac{4*184.88}{\pi 3^2} = \mathbf{26.16\ ft/s}$$

3. *Compute* V_h, V_v, $Tan\ \alpha$, V_p, *and* X_p

   a. V_h = horizontal velocity component of jet impingement

   $$V_h = V_o \cos(\sin^{-1} S) = 26.16 \cos(\sin^{-1} 0.02) = \mathbf{26.15\ ft/s}$$

   Where S = conduit slope at outlet (ft/ft)

   b. V_v = vertical velocity component of jet impingement

   $$V_v = \sqrt{((V_o S)^2} + 2g(z_p + \frac{D}{2}\cos(\sin_1 S)))$$

   $$= \sqrt{[(26.15 * 0.02)^2} + 2 * 32.2(3 + \frac{3}{2}\cos(\sin_1 0.02))] = \mathbf{17.03\ ft/s}$$

Where z_p=vertical distance from tailwater to conduit (ft)

c. $\mathrm{Tan}(\alpha)$ = jet impingement slope

$$\mathrm{Tan}(\alpha) = \frac{V_v}{V_h} = \frac{17.03}{26.15} = \mathbf{0.65}$$

d. V_p = jet velocity at impingement

$$V_p = \sqrt{[V_h^2 + V_v^2]} = \sqrt{[26.15^2 + 17.03^2]} = \mathbf{31.21}\ \boldsymbol{ft/s}$$

e. X_p = horizontal distance from conduit exit to center of jet at impingement with tailwater

$$X_p = \frac{V_h}{g}(V_v - V_o S) = \frac{26.15}{32.2}(17.03 - 26.16 * 0.02) = \mathbf{13.41}\ \boldsymbol{ft}$$

4. *Compute F_d*

a. F_d = densimetric Froude number

$$F_d = \frac{V_p}{\sqrt{(g d_{50}(\rho_s - \rho)/\rho)}} = \frac{31.21}{\sqrt{(32.2 * \frac{20}{12} * (2.64 - 1)/1)}} = \mathbf{3.33}$$

Where d_{50} = **20 inches**

ρ = water density (1.0)

ρ_s = bed/riprap particle density

5. *Compute $\frac{z_p}{D}$; if < 1, use equation 6a: if >1, use equation 6b.*

a. $\frac{z_p}{D} = \frac{3}{3} = \mathbf{1}$

6. *Compute z_m*

a. z_m = pool depth

b. $z_{ma} = 7.5D\left(1 - e^{-0.6(F_d - 2)}\right) = 7.5 * 3\left(1 - e^{-0.6(3.33-2)}\right) = \mathbf{12.35}$ **ft**

c. $z_{mb} = 10.5D\left(1 - e^{-0.35(F_d - 2)}\right) = 10.5 * 3\left(1 - e^{-0.35(3.33-2)}\right) = 11.70$

7. *Compute $1.0 + 25\left(\frac{d_{50}}{D}\right)$ to indicates if beach erosion occurs.*

a. $1.0 + 25\left(\frac{d_{50}}{D}\right) = 1.0 + 25\left(\frac{20/12}{3}\right) = \mathbf{14.89}$

8. *If* $\frac{Q}{\sqrt{gD^5}} < 1.0 + 25(\frac{d_{50}}{D})$*, then go to step 9, otherwise make design adjustments to increase d50 and return to step 4.*

   a. $\frac{Q}{\sqrt{gD^5}}$ = 2.09 is less than $1.0 + 25\left(\frac{d_{50}}{D}\right) = 14.89$ ✓ beach erosion does not occur.

9. *Compute* X_m

   a. X_m = horizontal distance from conduit exit to center of plunge pool

$$X_m = \left[X_p + \frac{z_m}{\tan\alpha}\right] 1.15e^{-0.15[Q/(gD^5)^{\frac{1}{2}}]} = \left[13.41 + \frac{12.35}{0.65}\right] 1.15e^{-0.15[2.09]} = \mathbf{27.2\ ft}$$

10. *Compute* L_e *and* W_e

   a. L_e = minimum horizontal distance from center of pool to water surface contour at upstream or downstream end of pool

$$L_e = z_m[\tfrac{3}{2} + \tfrac{1}{3}\tfrac{Q}{\sqrt{gD^5}}] = 12.35\left[\tfrac{3}{2} + \tfrac{1}{3} * 2.09\right] = \mathbf{27.12\ ft}$$

   b. W_e = one-half pool width at center at water surface elevation

$$W_e = z_m\left[1.5 + 0.15\frac{Q}{\sqrt{gD^5}}\right] = 12.35[1.5 + 0.15 * 2.09] = \mathbf{22.39\ ft}$$

11. *Determine* A_2*, plan rectangular area of the plunge pool bottom at 0.8*z_m *below the water surface.*

   a. L_{r2} = one-half pool length at bottom of pool

$$L_{r2} = 0.2L_e = 0.2 * 27.12 = \mathbf{5.42\ ft}$$

   b. W_{r2} = one-half pool width at bottom of pool

$$W_{r2} = 0.2W_e = 0.2 * 22.39 = \mathbf{4.48\ ft}$$

   c. A_2 = horizontal pool area at bottom of pool,

$$A_2 = 4L_{r2}W_{r2} = 4 * 5.42 * 4.48 = \mathbf{97.19\ sq\ ft}$$

12. *Check the side slopes of the plunge pool and adjust, if necessary, to acceptable grades,* z_l *and* z_w*. The final length and width of the plunge pool at the water surface are* $2L_r$ *and* $2W_r$*, respectively.*

a. L_r = adjusted horizontal length from center of pool to water surface contour at upstream or downstream end of pool

$$L_r = 0.8 z_m z_l + L_{r2} = 0.8 * 12.35 * 2.75 + 5.42) = \mathbf{32.59\ ft}$$

where z_l = combined end slope ratio = **2.75**

b. W_r = adjusted horizontal width from center of pool to water surface contour

$$W_r = 0.8 z_m z_w + W_{r2} = 0.8 * 12.35 * 2.0 + 4.48 = \mathbf{24.24\ ft}$$

where z_w = side slope ratio = **2.0**

13. *If $L_r < X_m$, increase side slope, z_l, so that $L_r > X_m$*

a. L_r = 32.59 and X_m = 27.2, therefore $L_r < X_m$ and satisfies slope constraints ✓

14. *Determine A_1, plan rectangular area of the plunge pool at the invert elevation of the outlet channel*

a. A_1 = horizontal pool area at channel invert elevation

$$A_1 = 4(L_r - z_l z_d)(W_r - z_w z_d) = 4(32.59 - 2.75 * 2.7)(24.24 - 2.0 * 2.7)$$

$$= \mathbf{1896.05\ sq\ ft}$$

where z_d = water depth above channel invert = **2.7 ft**

15. Plunge Pool Volumes:

a. V_{ao} = Volume between a horizontal plane at the invert elevation of the outlet channel and the exposed riprap surface

$$V_{ao} = \frac{1}{81}\left[A_1 + A_2 + \sqrt{A_1 A_2}\right][0.8 z_m - z_d]$$

$$= \frac{1}{81}\left[1896.05 + 97.15 + \sqrt{1896.05 * 97.15}\right][0.8 * 12.35 - 2.7] =$$

$$\mathbf{214.69\ cubic\ yards}$$

b. V_{a1} = Volume between a horizontal plane at the invert elevation of the outlet channel and a surface.

$$V_{a1} = \frac{1}{81}[A_{1a1} + A_{2a1} + \sqrt{(A_{1a1} * A_{2a1})}][0.8 z_m - z_d + a_1]$$

$$= \frac{1}{81}[3076.77 + 117.31 + \sqrt{3076.77 * 117.31})][0.8 * 12.35 - 2.7 + 2.33]$$

$$= \mathbf{445.85\ cubic\ yards}$$

a_1 = thickness of riprap material, **2.33 ft**

where $A_{1a1} = 4[L_r - z_l z_d + a_1\sqrt{(1 + z_l{}^2)}][W_r - z_w z_d + a_1\sqrt{(1 + z_w{}^2)}] =$

$4[32.59 - 2.75 * 2.7 + 2.33\sqrt{(1 + 2.75^2)}][24.24 - 2.0 * 2.7 + 2.33\sqrt{(1 + 2.0^2)}] =$

$\mathbf{3078.17\ ft}$

and $A_{2a1} = 4[L_{r2} + a_1(\sqrt{(1 + z_l{}^2)} - z_l)][W_{r2} + a_1\sqrt{(1 + z_w{}^2)} - z_w] =$

$4[5.42 + 2.33(\sqrt{(1 + 2.75^2)} - 2.75)][4.48 + 2.33(\sqrt{(1 + 2.0^2)} - 2.0)] = \mathbf{117.41\ ft}$

c. $V_{a2} = \frac{1}{81}[A_{1a2} + A_{2a2} + \sqrt{A_{1a2}} * A_{2a2}][0.8z_m - z_d + a_2]$

$= \frac{1}{81}[3367.09 + 121.88 + \sqrt{3367.09 * 121.88}][0.8 * 12.35 - 2.7 + 2.83]$

$= \mathbf{510.67\ cubic\ yards}$

where a_2 = thickness of riprap material and fill material, **2.83 ft**

and $A_{1a2} = 4[L_r - z_l z_d + a_2\sqrt{(1 + z_l{}^2)}][W_r - z_w z_d + a_2\sqrt{(1 + z_w{}^2)}] =$

$4[32.59 - 2.75 * 2.7 + 2.83\sqrt{(1 + 2.75^2)}][24.24 - 2.0 * 2.7 + 2.83\sqrt{(1 + 2.0^2)}] =$

$\mathbf{3368.56\ ft}$

and $A_{2a2} = 4[L_{r2} + a_2\sqrt{(1 + z_l{}^2)} - z_l][W_{r2} + a_2\sqrt{(1 + z_w{}^2)} - z_w] =$

$4[5.42 + 2.83\sqrt{(1 + 2.75^2)} - 2.75][4.48 + 2.83\sqrt{(1 + 2.0^2)} - 2.0] = \mathbf{121.98\ ft}$

16. The Volume of riprap is V_{a1}-V_{ao} in cubic yards.

a. $V_{a1} - V_{ao}$ = 445.85 – 214.69 = **231.16 cubic yards**

17. The Volume of filter material of thickness, a_2 - a_1, below a horizontal plane at the invert elevation of the outlet channel, including the volume of the riprap filter cap, is equal to $V_{a2} - V_{a1}$, cubic yards.

a. $a_2 - a_1$ = **0.5 inches**

b. $V_{a2} - V_{a1}$ = 510.67 – 445.85 = **64.82 cubic yards**

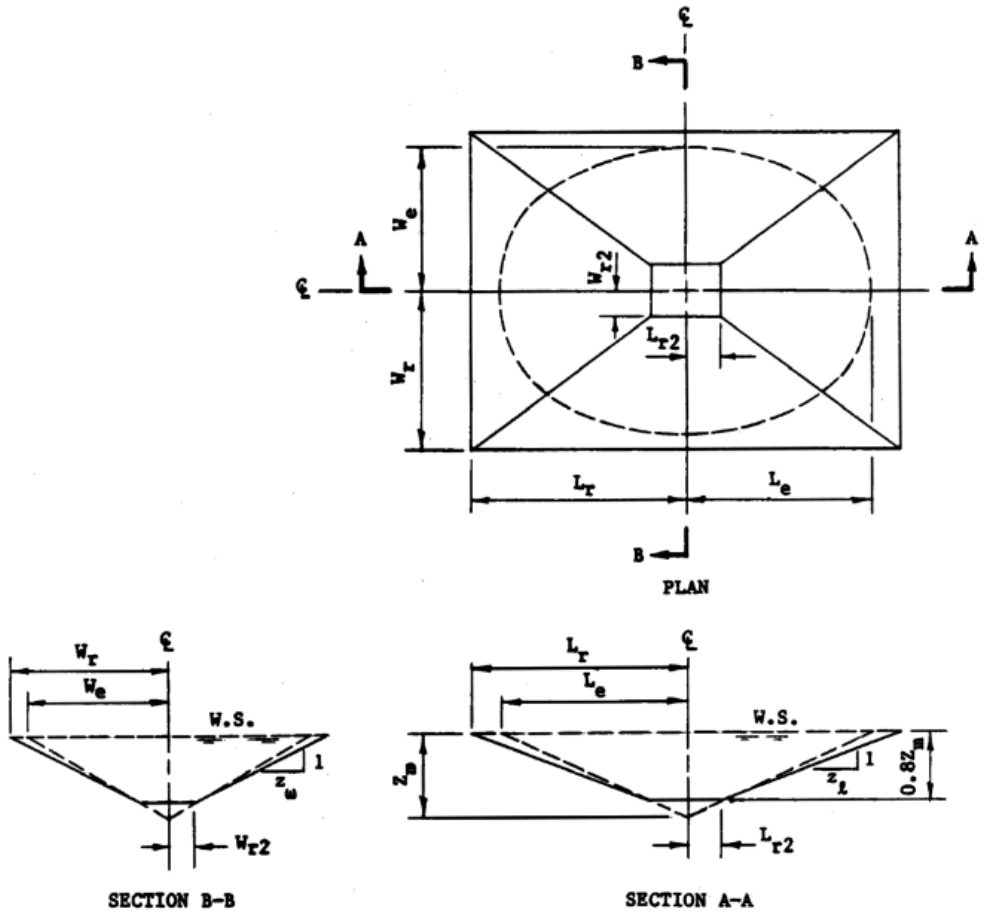

Figure 2 — Plunge Pool

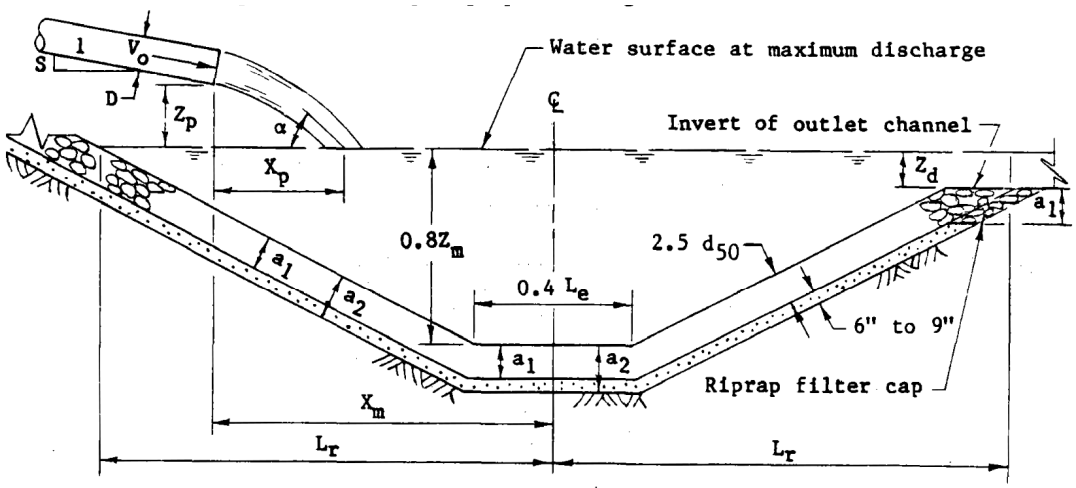

Figure 1 — Plunge pool definition sketch

RIPRAP LINED PLUNGE POOL FOR CANTILEVER OUTLET
Reference Design Note No. 6 (Second Edition), Jan. 23, 1986

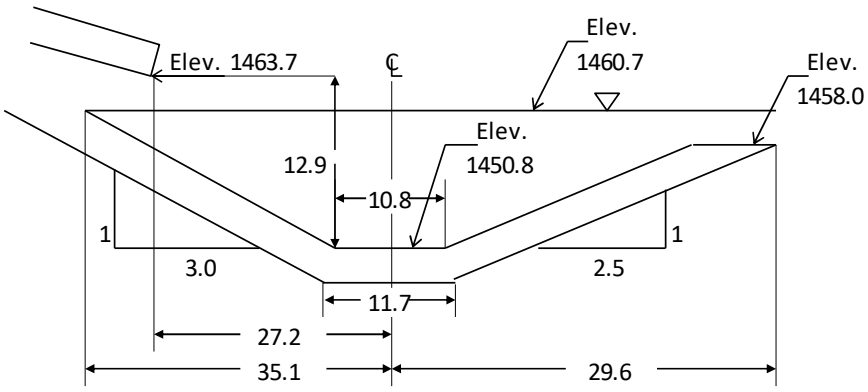

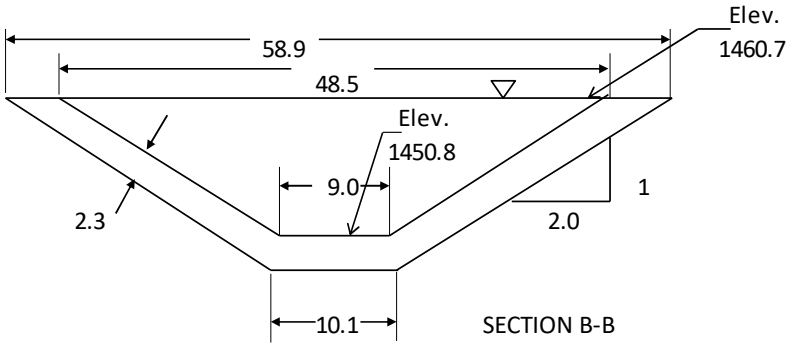

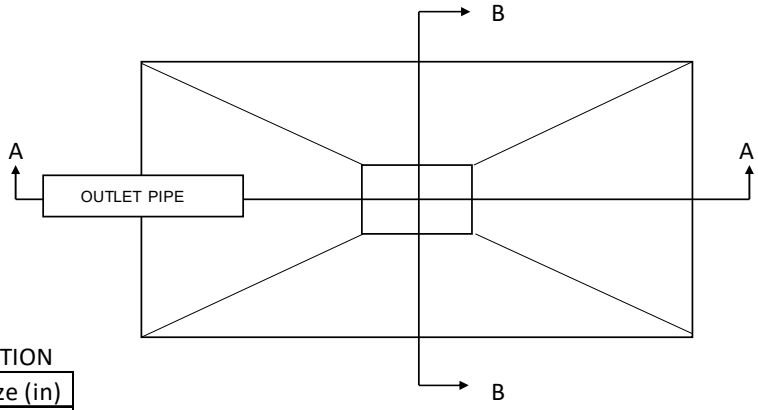

ROCK GRADATION

% Passing	Size (in)
100	40
60-85	30
25-50	20
5-20	10
0-5	4

ATTACHMENT D-4-4: AUXILIARY SPILLWAY ACB CALCULATIONS

HOUSTON engineering, inc.

Auxiliary Spillway ACB Calculations

All equations taken from NEH Part 628, Chapter 54 (pp. 19-21)

Spreadsheet created by: Houston Engineering, Inc

Constants				
	γ	Unit Weight of Water =	62.4	lb/ft^3
	p	Mass Density of Water =	1.94	slugs/ft^3

Inputs from ACB Supplier (*ACF environmental*)				
	C_L	Lift Coefficient =	0.005	
	A_B	Block Surface Area =	1.34	sq. ft.
	l_1	Block Height =	0.71	ft
	l_2	Moment Arm for Submerged Weight Force =	0.35	ft
	l_3	Moment Arm for Lift Force Submerged Weight Force =	0.73	ft
	b	Block Width Normal to Flow =	1.23	ft
	ΔZ	Height of Block Protrusion =	0	ft
	W_b	Weight of Block =	134	lbs
	S_c	Specific Gravity of Block =	2.2	

Equations				
$W_S = W_b\left(\frac{S_C - 1}{S_C}\right)$	W_S	Submerged Weight of Block =	73.09	lbs
$\theta_0 = \arctan(bed\ slope)$	θ_0	Bed Slope Angle =	0.13	radians
$\theta_1 = \arctan(\frac{1}{sideslope})$	θ_1	Side Slope Angle =	0.32	radians
$\theta_2 = \arctan(\tan\theta_1 \cos\theta_0)$	θ_2	Angle Between Bed Slope and Side Slope =	0.32	radians
$\tau_0 = \gamma Y S_f$	τ_0	Shear Stress:	17.68	lb/ft^2
$V = \frac{1.49}{n}\left(R^{\frac{2}{3}}\right)(Bed\ Slope)^{\frac{1}{2}}$	V	Flow Velocity:	30.03	ft/s
$F_D = \tau_0 A_B$	F_D	Drag Force:	23.74	lbs
$F_L = 1/2 C_L p A_B V^2$	F_L	Lift Force:	6.11	lbs
$F_D = F_L = 1/2 \Delta Z b p V^2$	$F_D' = F_L'$	Additional Drag and Lift Force Caused by Block Protrusion:	0	lbs
$W_{SX} = W_S \sin\theta_0$	W_{SX}	Submerged Unit Weight of Block Parallel to Side Slope:	9.42	lbs
$W_{SY} = W_S \cos\theta_0 \cos\theta_2$	W_{SY}	Submerged Unit Weight of Block Normal to Side Slope:	68.82	lbs
$SF_P = \frac{l_3 W_{SY}}{(l_2 W_{SX} + l_1(F_D + F_D') + l_3(F_L + F_L'))}$	SF_P	Safety Factor:	**2.03**	

$SF_P = FOS_C$

The factor of safety (FOS) is the ratio of the load that a system can withstand to the expected applied load. It represents how much stronger the system is than it needs to be for an intended load. The FOS accounts for unexpected loads, misuse, emergencies, as well as uncertainty.

The calculated factor of safety (FOS_C) is a representation of the stabilizing forces acting on the ACB system divided by the destabilizing forces acting on the system.

Table 5: Project Factor of Safety

NRCS Dam Hazard Class	Minimum FOS_P
Low	1.5
Medium	1.75
High	2.0

$FOS_C > FOS_P$, therefore, BLOCK SIZE IS ADEQUATE

ATTACHMENT D-4-5: TR 210-60 PEAK BREACH DISCHARGE CALCULATIONS

HOUSTON engineering, inc.

Watershed Name: **North Branch Forest River**

Date **Dec 16, 2021**
Prepared By: **Rachel Glatt**
Checked By: **Paul LeClaire**

County, ST Walsh County, ND

Elevations						
Top of Dam	1,527.7	Ft NAVD88	Top Width	26	Ft	
Water Surface@Breach	1,527.7	Ft NAVD88	Upstream Slope Above Berm	3:1		
Wave Berm	1,481.2	Ft NAVD88	Upstream Slope Below Berm	3:1		
Average Valley Floor	1,467.4	Ft NAVD88	Downstream Slope Above Berm	3:1		
Stability Berm	1,497.7	Ft NAVD88	Downstream Slope Below Berm	4:1		
Length of Dam at Breach Elev	760	Ft	Wave Berm Width	10	Ft	L
Volume of Breach	6,760	Ac-ft	Stability Berm Width	20	Ft	

Breach Discharge Computations

Hw < 103 - Low Dam

Volume of Breach (Vs)	6,760	Ac-ft	
Height Of Breach (Hw)	60	Ft	Hw
Cross-Section Area at Breach (A)	13,664	Ft^2	
$T = 65(H^{0.35})/0.416$ - theoretical breach width	656	Ft	T

L > T - Wide Dam

Q_{max} NOT GREATER THAN		Upper Bound Check		
$Q_{max} = 65(HW^{1.85})$	L>T Wide	127,634	cfs	UpBndWide
$Q_{max} = 0.416 (L)(Hw^{1.5})$	L<T Narrow	147,894	cfs	UpBndNarrow

$Br = (Vs * Hw)/A$	Value	29.81		Br
$Q_{max} = 1,100 (Br)^{1.35}$		107,600	cfs	

Q_{max} NOT LESS THAN	Lower Bound Check		
$Q_{max} = 3.2(Hw^{5/2})$	90,203	cfs	LowBnd

TR 210-60 Breach Q_{max} for Hazard Class: 110,000 cfs

Technical Release 210-60 Earth Dams and Reservoirs
TR-210-60, March 2019. Pg. 1-2 and 1-3

Spreadsheet used to develop this attachment was originally created by the NRCS (Version 2.8, 2013). All calculations were verified using TR 210-60 (March, 2019). Spreadsheet was modified by Houston Engineering Inc.

ATTACHMENT D-4-6: STABILITY ANALYSIS DATA – SITES OUTPUT

```
********************************************************************************
 SITES XEQ 11/22/2021   WATER RESOURCE SITE ANALYSIS COMPUTER PROGRAM
    VER 2005.1.8            (USER MANUAL - DATED DECEMBER 2005)
    TIME 17:01:22

 ************************* 80-80 LIST OF INPUT Data **************************

 SITES    01/01/20051       Bylin                 20.862721 C2
 SAVMOV   0   101
 SAVMOV   101  1                                    1
 *        Drainage Area to Bylin Dam
 *        - Subbasins F-NB500 (20.863 sq mi)
 *        - Stability Design and Freeboard Hydrographs 12H Loc (TR-60)
 *        - Principal spillway info based off of survey and as-builts
 *        - Elevation Storage data from TOS Bathymetry Survey 2020
 STRUCTURE 1       Bylin Dam (Data from TOS Bathymetric Survey)
             1467.5                    0
             1468                      0.00258140
             1469                      0.10121566
             1470                      0.56925364
             1472                      4.78690536
             1475                      27.9623818
             1478                      73.1568186
             1481                      142.693408
             1485                      275.723087
             1490                      512.922751
             1495                      849.914497
             1500                      1292.81099
             1505                      1867.80562
             1510                      2579.06160
             1515                      3460.24527
             1520                      4553.52237
             1530                      7573.13981
             1540                      12443.3122
             1550                      19557.6906
             1563                      32461.9658
 ENDTABLE
  WSDATA       2C 1                   20.86272
  PDIRECT      0          0
  POOLDATA     ELEV       1490.2      1490.2          1477.24                 1461.25     TC
  PSINLET      ELEV       0.75        18              1511.274    2.916667    2.75
  PSDATA       1          362         36                          0.013       1465.2
  ASSURFACE    41         1079.13     0.002
               0          89.66       0.035           0.5         3           1
               89.66      109.07      0.013           0         1
               109.07     1079.13     0.035           0.5         1           1
  ENDTABLE
```

ASDATA	41			3		1
BTMWIDTH	FEET	300				
ASMATERIAL						
	1	17	0.0125984217.7	80		0.08
	2	23	0.0015748040.9	95		0.19
	3	1.374016	90	1.8		
ENDTABLE						
ASCOORD	1	Overburden				
	0	1512.6	23.21	1517.1	36.13	1515.6
	85.13	1517	98.48	1518.4	108.84	1518.3
	116.04	1517	120.86	1516.6	345.65	1517.6
	368.8	1517.4	560.61	1518.6	581.34	1518.5
	606.12	1517.1	612.6	1515.7	783.23	1498.4
	816.69	1491.9	865.02	1482.6	931.97	1469.1
	971.32	1468.2	1050.84	1465.6	1079.13	1458.2
ENDTABLE						
ASCOORD	2	Clay				
	0	1500.1	23.21	1504.6	36.13	1503.1
	85.13	1504.5	98.48	1505.9	108.84	1505.8
	116.04	1504.5	120.86	1504.1	345.65	1505.1
	368.8	1504.9	560.61	1506.1	581.34	1506
	606.12	1504.6	612.6	1503.2	783.23	1485.9
	816.69	1479.4	865.02	1470.1	931.97	1456.6
	971.32	1455.7	1050.84	1453.1	1079.13	1445.7
ENDTABLE						
ASCOORD	3	Rock				
	0	1492.4	23.21	1496.9	36.13	1495.4
	85.13	1496.8	98.48	1498.2	108.84	1498.1
	116.04	1496.8	120.86	1496.4	345.65	1497.4
	368.8	1497.2	560.61	1494.5	581.34	1494
	606.12	1492.1	612.6	1490.7	783.23	1473.4
	816.69	1466.9	865.02	1457.6	931.97	1444.1
	971.32	1443.2	1050.84	1440.6	1079.13	1433.2
ENDTABLE						
GRAPHICS	I					
GO,DESIGN	LCP					1508.29
SAVMOV	2	101	1	1		
ENDJOB						

****

1SITES XEQ 11/22/2021 ---------- COMMENT PAGE ----------

VER 2005.1.8 Bylin WSID = 1

Drainage Area to Bylin Dam
- Subbasins F-NB500 (20.863 sq mi)
- Stability Design and Freeboard Hydrographs 12H Loc (TR-60)
- Principal spillway info based off of survey and as-builts
- Elevation Storage data from TOS Bathymetry Survey 2020

***** MESSAGE - DEFAULT TOPSOIL FILL MATERIAL PARAMETERS USED.
***** WARNING - HEADCUT ERODIBILITY INDEX OF 1.8 (MATERIAL 3)
APPEARS INCONSISTENT WITH DENSITY OF 90.0.
***** MESSAGE - AUXILIARY SPILLWAY CREST ELEVATION IS SET TO 1518.60
FROM THE ASCOORD RECORDS.
***** MESSAGE - VALUES FROM ASSURFACE, REACH 2 IMPLY NO VEGETAL COVER WITH
"n" OF 0.013.
***** WARNING - DOWNWARD SLOPE FOUND IN INLET CHANNEL OF EXISTING AUX. SPILLWAY
STARTING AT X = 346., Y = 1517.60; NEXT Y = 1517.40.

1SITES ----------
XEQ 11/22/2021 Bylin WSID= 1
VER 2005.1.8 Bylin Dam (Data from TOS Bathymetric Survey) SUBW= 1
TIME 17:01:22 SITE = 1 PASS= 1 PART= 1

********** MATERIAL PROPERTIES **********

MATERIAL	PI	DRY DENSITY lbs/CuFt	Kh	PERCENT CLAY	DETACH. RATE (Ft/H)/(lb/SqFt)	REP. DIAMETER inches
Overburden	17	80	0.08	17.7	--	0.0126
Clay	23	95	0.19	40.9	--	0.00157
Rock	0	90	1.8	0	--	1.37402
TS_FILL	0	100	0.05	0	--	0.05
GEN_FILL	17	80	0.08	17.7	--	0.0126

********** BASIC Data **********
HUMID- SUBHUMID CLIMATE AREA DESIGN CLASS C

INFLOW HYDROGRAPH(S) ENTERED

PRECIP. -	Q-PS,1-DAY	Q-PS,10-DAY	Q-SD	Q-FB	
	0	0	0	0	
WSDATA -	CN	DA-SM	TC/L	-/H	QRF
	0	20.86	0	0	0
SITEDATA -	PERM POOL	CREST PS	FP SED	VALLEY FL	378?
	1490.2	1490.2	1477.24	1461.25	NO
	BASEFLOW	INITIAL EL	EXTRA VOL	SITE TYPE	
	0	0	0	DESIGN	

PSDATA -	NO. COND	COND L	DIA/W	-/H	
	1	362	36	0	
	PS N	KE	WEIR L	TW EL	
	0.013	0.75	18	1465.2	
	2ND STG	ORF H	ORF L	START AUX.	
	1511.27	2.92	2.75	1508.29	
ASCRESTS -	AUX.1	AUX.2	AUX.3	AUX.4	AUX.5
	1518.6	0	0	0	0
AUX.Data -	REF.NO.	RETARD. Ci	TIE STATION	INLET LENGTH	
	41	0	560.61	0	
AUX.Data -	INLET N	SIDE SLOPE	EXIT N	EXIT SLOPE	ACTUAL AUX?
	0.035	3	0.035	0.005	YES
BTM WIDTH -	BW1	BW2	BW3	BW4	BW5
ft	300	0	0	0	0

AUXILIARY SPILLWAY RATING DEVELOPED USING WSPVRT.

1********** DETAILED LIST OF BASIC Data **********

WEIR COEF. FOR ORIFICES.....	3.1	RATIO OF la TO S (CH.10,NEH4).	0.2
WEIR COEF. FOR DROP INLET.....	3.1	TIME INCS TO PEAK OF UNIT HYD.	10
DISCHARGE COEF. FOR ORIFICES.....	0.6	NO. POINTS FOR DESIGN HYD. ...	5000
HOOD, WEIR INLET COEF.	0.6	DRAWDOWN TIME LIMIT - DAYS....	10
HOOD, PIPE ENTRANCE COEF.	0.6	DRAWDOWN RATIO STORAGE LIMIT..	0.15
HOOD, SLUG FLOW COEF.	0	OTHER DRAWDOWN RATIOS APPLY ?.	NO
PS ACCURACY OF FULL FLOW CALC.,FT	0.01	WSP ALLOWABLE FSS VEL. CHANGE.	0.05
FILLET SIZE FOR BOX CONDUITS.....	6	WSP FSS CALC. PRECISION, FT..	0.005
GRAVITATIONAL CONSTANT.....	32.16	AUX. SPILLWAY MIN. CAP. COEF.	237
MIN. NHCP378 PS PIPE AREA SQFT..	0.545	AUX. SPILLWAY MIN. CAP. EXP.	0.493
MIN. TR60 DEPTH AUX. TO TOP DAM..	3	MIN. AUX. BW IN BW SOLUTION,FT	20
MIN. NHCP378 DEPTH AUX.TO TOP DAM	2	PRECISION OF BW SOLUTION.....	1
MIN. NHCP378 DEPTH PS - AUX.CREST	1	OLD TR60 CRITERIA USED	NO
MIN. NHCP378 DEPTH DESIGN Q - TOD	1	OLD NHCP378 CRITERIA USED	NO

EMBANKMENT TEMPLATE: TOP WIDTH = (calc.), MAX. CROWN = 0.667 ft,

SIDE SLOPE RATIOS		WAVE BERM WIDTH	MULTIPLE STABILITY BERMS U&D/S WIDTHS	DELTA H	SEPARATE STABILITY BERMS WIDTHS, ft		HEIGHTS, ft	
U/S	D/S	ft	ft	ft	U/S	D/S	U/S	D/S
2.5	2.5	10	0	0	0	0	0	0

DIMENSIONLESS UNIT HYDROGRAPH
STANDARD DIMENSIONLESS UNIT HYDROGRAPH
PEAK FACTOR = 484.0 | TIME INC. =0.020 | NO. INC. TO PEAK = 10.
VOLUME FACTOR = 48.3429

0.0000	0.0300	0.1000	0.1900	0.3100
0.4700	0.6600	0.8200	0.9300	0.9900
1.0000	0.9900	0.9300	0.8600	0.7800
0.6800	0.5600	0.4600	0.3900	0.3300
0.2800	0.2410	0.2070	0.1740	0.1470
0.1260	0.1070	0.0910	0.0770	0.0660
0.0550	0.0470	0.0400	0.0340	0.0290
0.0250	0.0210	0.0180	0.0150	0.0130
0.0110	0.0090	0.0080	0.0070	0.0060
0.0050	0.0040	0.0030	0.0020	0.0010
0.0000				

EXISTING SURFACE OF AUXILIARY SPILLWAY - X,Y COORDINATES:

0.	1512.60
23.	1517.10
36.	1515.60
85.	1517.00
98.	1518.40
109.	1518.30
116.	1517.00
121.	1516.60
346.	1517.60
369.	1517.40
561.	1518.60
581.	1518.50
606.	1517.10
613.	1515.70
783.	1498.40
817.	1491.90
865.	1482.60
932.	1469.10
971.	1468.20
1051.	1465.60
1067.	1461.25

1NRCS DESIGN STORM RAINFALL DISTRIBUTION (CHAPTER 21, NEH4 & TR-60).

0.000	0.008	0.016	0.025	0.033
0.043	0.052	0.063	0.074	0.086
0.099	0.112	0.126	0.142	0.160
0.180	0.205	0.255	0.345	0.437
0.530	0.603	0.633	0.660	0.684
0.705	0.724	0.742	0.759	0.775
0.790	0.804	0.818	0.831	0.844
0.856	0.868	0.879	0.890	0.900
0.910	0.920	0.930	0.939	0.948
0.957	0.966	0.975	0.983	0.992
1.000				

1SITES ----------
XEQ 11/22/2021 Bylin WSID= 1
VER 2005.1.8 Bylin Dam (Data from TOS Bathymetric Survey) SUBW= 1
TIME 17:01:22 SITE = 1 PASS= 1 PART= 2

***** MESSAGE - AREAL CORRECTIONS BASED ON DRAINAGE AREA OF 20.9 SQ. MILES.

DESIGN 0.94319 PS-1 DAY 0.96892 PS-10 DAY 0.98593.
MESSAGE ---- Climatic Index changed from 0.0 to 1.0 for this run.

PERM POOL 1490.20 FT 526.4 ACFT 0.00 AC 186.1 CFS

CREST PS 1490.20 FT 526.4 ACFT 0.00 AC 186.1 CFS

SED ACCUM 1490.20 FT 526.4 ACFT 0.00 AC 186.1 CFS

2ND STAGE 1511.27 FT 2803.6 ACFT 0.00 AC 308.4 CFS

START ELEV 1508.29 FT 2335.8 ACFT 0.00 AC 155.8 CFS

****
RATING TABLE DEVELOPED, SITE = 1 :
BY PROGRAM FOR PS AND AUX. SPILLWAYS
AUX. RATING USED WSPVRT METHOD.

RATING TABLE NUMBER 1

	ELEV.	Q-TOTAL	Q-PS	Q-AUX.	VOLUME	AREA
	FEET	CFS	CFS	CFS	AC-FT	ACRE
1	1490.2	0	0	0	526.4	0
2	1490.76	3.62	3.62	0	564.48	0
3	1491.33	10.24	10.24	0	602.55	0
	TRANSITION TO ORIFICE FLOW, ELEV =				**1491.89 FT**	
4	1491.89	18.81	18.81	0	640.63	0
5	1498.35	99.88	99.88	0	1147.05	0
6	1504.81	139.99	139.99	0	1846.44	0
7	1511.27	170.94	170.94	0	2803.57	0
8	1511.4	173.85	173.85	0	2825.09	0
9	1511.52	178.72	178.72	0	2846.58	0
		FULL CONDUIT FLOW, ELEV =			**1511.64 FT**	
10	1511.64	184.88	184.88	0	2868.07	0
11	1528.76	216.32	216.32	0	7198.67	0
12	1545.88	243.71	243.71	0	16626.48	0
13	1563	268.33	268.33	0	32461.84	0

INFLOW HYDROGRAPH PROVIDED IN LOCATION 3, PEAK= 7669.20 CFS, AT 14.00 HRS.
TITLE = SDH_12H_Local

INFLOW HYDROGRAPH PROVIDED IN LOCATION 5, PEAK= 21314.30 CFS, AT 14.00 HRS.
TITLE = FBH_12H_Local

1SITES ----------
XEQ 11/22/2021 Bylin WSID= 1
VER 2005.1.8 Bylin Dam (Data from TOS Bathymetric Survey) SUBW= 1
TIME 17:01:22 SITE = 1 PASS= 1 PART= 3

AUX. CREST 1518.60 FT 4247.4 ACFT 0.00 AC 194.9 CFS
PS STORAGE 3721.0 ACFT, BETWEEN AUX. CREST AND SED. ACCUM ELEVATIONS.

START ELEV 1508.29 FT 2335.8 ACFT 0.00 AC 156.6 CFS

ELEVATION OF LOW POINT IS ZERO. NO CRITERIA CHECK MADE FOR
STRUCTURE CLASSIFICATION.

NRCS-SDH INFLOW HYDROGRAPH INPUT, DA = 20.86 SQUARE MILES
PEAK = 7669.2 CFS, AT 14.0 HRS.

NRCS-FBH INFLOW HYDROGRAPH INPUT, DA = 20.86 SQUARE MILES
PEAK = 21314.3 CFS, AT 14.0 HRS.
AUX. AREAL CORRECTION USED =0.9432

****

RATING TABLE DEVELOPED, SITE = 1 :
BY PROGRAM FOR PS AND AUX. SPILLWAYS
AUX. RATING USED WSPVRT METHOD.

RATING TABLE NUMBER 2

	ELEV. FEET	Q-TOTAL CFS	Q-PS CFS	Q-AUX. CFS	VOLUME AC-FT	AREA ACRE
1	1490.2	0	0	0	526.4	0
2	1490.76	3.62	3.62	0	564.48	0
3	1491.33	10.24	10.24	0	602.55	0
	TRANSITION TO ORIFICE FLOW, ELEV =				**1491.89 FT**	
4	1491.89	18.81	18.81	0	640.63	0
5	1498.35	99.88	99.88	0	1147.05	0
6	1504.81	139.99	139.99	0	1846.44	0
7	1511.27	170.94	170.94	0	2803.57	0
8	1511.4	173.85	173.85	0	2825.09	0
9	1511.52	178.72	178.72	0	2846.58	0
		FULL CONDUIT FLOW, ELEV =			**1511.64 FT**	
10	1511.64	184.88	184.88	0	2868.07	0
11	1513.96	189.46	189.46	0	3276.95	0
12	1516.28	193.92	193.92	0	3740.13	0
13	1518.6	198.27	198.27	0	4247.43	0
14	1520.82	2341.12	202.35	2138.77	4801.11	0
15	1523.04	6690.9	206.35	6484.54	5471.5	0
16	1527.04	19555.89	213.36	19342.53	6678.13	0
17	1531.92	41955.7	221.63	41734.07	8508.23	0
18	1540.8	102435.9	235.92	102200	13012.5	0
19	1551.9	203627.3	252.64	203374.6	21443.72	0
20	1563	335692.1	268.33	335423.8	32461.96	0

****

SUMMARY OF AUXILIARY SPILLWAY SURFACE CONDITIONS USED IN COMPUTATIONS BY REACH

REACH	FROM STA (ft)	TO STA (ft)	SLOPE (%)	RETARDANCE CURVE INDEX@	VEGETAL COVER FACTOR	MAINT. CODE +	ROOTING DEPTH (ft)	REACH LOCATION *
1	0	23	-19.4	0.035	**	**	**	INLET
2	23	36	11.6	0.035	**	**	**	INLET
3	36	85	-2.9	0.035	**	**	**	INLET
4	85	90	-10.5	0.035	**	**	**	INLET
5	90	98	-10.5	0.013	**	**	**	INLET
6	98	109	1	0.013	**	**	**	INLET

7	109	116	18.1	0.035	**	**	**	INLET
8	116	121	8.3	0.035	**	**	**	INLET
9	121	346	-0.4	0.035	**	**	**	INLET
10	346	369	0.9	0.035	**	**	**	INLET
11	369	561	-0.6	0.035	**	**	**	INLET
12	561	581	0.5	0.035	0.5	1	1	EXIT !
13	581	606	5.6	0.035	0.5	1	1	EXIT
14	606	613	21.6	0.035	0.5	1	1	EXIT
15	613	783	10.1	0.035	0.5	1	1	EXIT
16	783	817	19.4	0.035	0.5	1	1	EXIT
17	817	865	19.2	0.035	0.5	1	1	EXIT
18	865	932	20.2	0.035	0.5	1	1	EXIT
19	932	971	2.3	0.035	0.5	1	1	EXIT
20	971	1051	3.3	0.035	0.5	1	1	EXIT
21	1051	1067	26.2	0.035	0.5	1	1	EXIT

@ The program interprets retardance curve index entries of less than 1 as Manning's n values.
+ The minimum maintenance code value of 2 is used in INTEGRITY computations (the program changes values of 1 to 2 during computation).
* Upper case indicates a reach of constructed spillway channel.
** The program does not use vegetal cover factor, maintenance code, and rooting depth for inlet and crest reaches in computations.
! Reach 12 used in computing exit channel velocities.

****

ROUTED RESULTS	BTM WIDTH FT	MAX ELEV FT	VOL-MAX ACFT	AREA-MAX AC	AUX.-HP FT	VOL-AUX. ACFT
NRCS-SDH	300.0	1522.49	5306.5	0.0	3.89	1059.1

PEAK - CFS	Q-PS	Q-AUX.	Q-TOT.
DISCHARGE =	205.	5415.	5620.

AUXILIARY SPILLWAY ---	CRITICAL DEPTH FT	CRITICAL VELOCITY F T/SEC	CRITICAL SLOPE-Sc FT/FT	25% OF Q Sc FT/FT
	2.15	8.23	0.014	0.019

AUXILIARY SPILLWAY DURATION FLOW = 29.0 HOURS

EXIT CHANNEL FLOW SUBCRITICAL: MAX VELOCITY= 5.9 FT/SEC
EXIT SLOPE = 0.005 FT/FT
FLOW DEPTH = 3.0 FT

***** WARNING - SOD STRIPPING WILL PROBABLY OCCUR DUE TO GROSSSTRESS LIMIT IN STABILITY CONTROL REACH WHICH STARTS AT STATION 1050.84.

****

EROSIONALLY EFFECTIVE STRESS FOR STABILITY ANALYSIS OF AUX. EXIT CHANNEL
(Refer to Ag. Handbook 667, Chapt. 3, for allowable stresses.)
Aux. Spillway Discharge = 5415. cfs; Bottom Width = 300. ft

REACH NO.	FROM STA	TO STA	SLOPE %	MANNING`S n	VELOCITY ft/s	TOTAL STRESS lb/ft^2	EFFECTIVE STRESS lb/ft^2	
12	561	581	0.48	0.035	5.94	0.89	0.088	
13	581	606	5.65	0.035	12.59	4.99	0.495	
14	606	613	21.61	0.035	18.89	12.76	1.267	
15	613	783	10.14	0.035	15.03	7.51	0.746	
16	783	817	19.43	0.035	18.3	11.84	1.176	
17	817	865	19.24	0.035	18.24	11.77	1.169	
18	865	932	20.16	0.035	18.5	12.16	1.208	
19	932	971	2.29	0.035	9.56	2.65	0.263	
20	971	1051	3.27	0.035	10.66	3.4	0.338	
21	1051	1067	26.16	0.035	20.02	14.59	1.449	max.

****

ROUTED RESULTS	BTM WIDTH FT	MAX ELEV FT	VOL-MAX ACFT	AREA-MAX AC	AUX.-HP FT	VOL-AUX. ACFT
NRCS-FBH	300.0	1527.21	6729.7	0.0	8.61	2482.2

PEAK - CFS	Q-PS	Q-AUX.	Q-TOT.
DISCHARGE =	214.	19973.	20187.

	CRITICAL DEPTH	CRITICAL VELOCITY	CRITICAL SLOPE-Sc	25% OF Q Sc
AUXILIARY	FT	FT/SEC	FT/FT	FT/FT
SPILLWAY ---	5.07	12.49	0.011	0.014

INTEGRITY ANALYSIS - REACH SURFACE PERFORMANCE SUMMARY
(The auxiliary spillway began flow at time = 10.0 hours
and peaked at time = 16.0 hours.)

REACH 12: FROM STATION 561. TO 581. ON 0.5% SLOPE.
Vegetal cover failed and concentrated flow developed
at time = 41.0 hours.

REACH 13: FROM STATION 581. TO 606. ON 5.6% SLOPE.
Vegetal cover failed and concentrated flow developed
at time = 15.0 hours.

REACH 14: FROM STATION 606. TO 613. ON 21.6% SLOPE.
Vegetal cover failed and concentrated flow developed
at time = 13.0 hours.

REACH 15: FROM STATION 613. TO 783. ON 10.1% SLOPE.
Vegetal cover failed and concentrated flow developed
at time = 13.0 hours.

REACH 16: FROM STATION 783. TO 817. ON 19.4% SLOPE.
Vegetal cover failed and concentrated flow developed
at time = 13.0 hours.

REACH 17: FROM STATION 817. TO 865. ON 19.2% SLOPE.
Vegetal cover failed and concentrated flow developed
at time = 13.0 hours.

REACH 18: FROM STATION 865. TO 932. ON 20.2% SLOPE.
Vegetal cover failed and concentrated flow developed
at time = 13.0 hours.

REACH 19: FROM STATION 932. TO 971. ON 2.3% SLOPE.
Vegetal cover failed and concentrated flow developed
at time = 13.0 hours.

REACH 20: FROM STATION 971. TO 1051. ON 3.3% SLOPE.
Vegetal cover failed and concentrated flow developed
at time = 16.0 hours.

REACH 21: FROM STATION 1051. TO 1067. ON 26.2% SLOPE.
Vegetal cover failed and concentrated flow developed
at time = 13.0 hours.

INTEGRITY ANALYSIS - HEADCUT EROSION DAMAGE SUMMARY

The headcut BREACHED the spillway crest at
time equal approximately 15.0 hours.
Computations terminated at that point!

The most upstream headcut began at station 606.
and progressed upstream to station 561.
The final height of the headcut was 57.3 ft.

The deepest headcut is also the furthest upstream.

	DURATION FLOW	ATTACK OE/B	DIST. FROM MOST U/S HEADCUT TO U/S EDGE
AUXILIARY	HRS	ACFT/FT	AUX. CREST, FT
SPILLWAY----	35.0	58.1	>>>BREACH<<<
			Depth = 57.3 ft

EXIT CHANNEL FLOW SUBCRITICAL: MAX VELOCITY= 9.8 FT/SEC
EXIT SLOPE = 0.005 FT/FT
FLOW DEPTH = 6.4 FT

Inflow Hyd 1 SDH-Peak = 5620.43 CFS at 17.00 hrs., Location Point

Inflow Hyd 1 FBH-Peak = 20186.72 CFS at 15.00 hrs., Location Point
HYDOUT 1 1

1SITES....JOB NO. 1 COMPLETE.

---

1 Bylin
0 SUBWATERSHED(S) ANALYZED.
1 STRUCTURE(S) ANALYZED.
2 HYDROGRAPHS ROUTED AT LOWEST SITE.
0 TRIALS TO OBTAIN BOTTOM WIDTH FOR SPECIFIED STRESS OR VELOCITY.

****

SITES.....COMPUTATIONS COMPLETE

SUMMARY TABLE 1 SITES VERSION 2005.1.8
DATED 01/01/2005

WATERSHED ID	RUN DATE	RUN TIME
1	11/22/2021	17:01:22

>>> SITE ID	SUBWS ID	SUBWS DA (SQ MI)	CURVE NO.	TC (HRS)	TOTAL DA (SQ MI)	TYPE DESIGN	STRUC CLASS	<<<
1	1	20.86	0	0	20.86	TR60	C	

PASS NO.	DIA./ WIDTH (IN/FT)	AUX.CREST ELEV (FT)	BTM. WIDTH (FT)	MAX. HP (FT)	MAX. ELEV (FT)	EMB. VOL. (CY)	INTEGR.* DIST. (FT)	EXIT* VEL. (FT/SEC)	TYPE HYD
1	36	1518.6	300	8.6	1527.2	0	<BREACH>	9.8	NRCS-FBH

* INTEGRITY DIST. AND EXIT VEL. VALUES ARE BASED ON THE ROUTED HYDROGRAPH SHOWN UNDER TYPE HYD.

SITES.....SUMMARY TABLE 1 COMPLETED.

NRCS SITES VERSION 2005.1.8 ,01/01/2005
1 FILES

INPUT = H:\JBN\7100\7135\7135_0037\Engineering\Water Resources\SITES\Bylin - PMP ND\Proposed.D2C
OUTPUT = H:\JBN\7100\7135\7135_0037\Engineering\Water Resources\SITES\Bylin - PMP ND\Proposed.OUT
DATED 11/22/2021 17:01:22

GRAPHICS FILES GENERATED

OPTION "L" = H:\JBN\7100\7135\7135_0037\Engineering\Water Resources\SITES\Bylin - PMP ND\Proposed.DRG DATED 11/22/2021 17:01:22

OPTION "P" = H:\JBN\7100\7135\7135_0037\Engineering\Water Resources\SITES\Bylin - PMP ND\Proposed.DHY DATED 11/22/2021 17:01:22

OPTION "E" = H:\JBN\7100\7135\7135_0037\Engineering\Water Resources\SITES\Bylin - PMP ND\Proposed.DEM DATED 11/22/2021 17:01:22

AUX.GRAPHICS = H:\JBN\7100\7135\7135_0037\Engineering\Water Resources\SITES\Bylin - PMP ND\Proposed.DG* DATED 11/22/2021 17:01:22

1 BACKGROUND

The purpose of this report is to document the work completed related to design for the preferred structural alternative associated with Bylin Dam. This design report is required under item F.5 within the Expected Accomplishments and Deliverables section in the Cooperative Agreement between the NRCS and the Walsh County Water Resource District to develop a Watershed Plan for the North Branch Forest River Watershed Forest River Dam # 1, Bylin Dam (the award identifying number is NR196633XXXXC004 and the agreement is dated August 9, 2019). The data and analysis described in this report is used to facilitate the completion of the overall Watershed Plan for the North Branch Forest River Watershed Forest River Dam #1, Bylin Dam.

1.1 RELAVENT ANALYSIS COMPLETED PRIOR TO THIS REPORT

For information related to the existing conditions analysis for Bylin Dam, refer to **Appendix D-1** of the Watershed Plan. **Appendix D-1** details the current hazard classification and deficiencies associated with Bylin Dam. Information related to the development of alternatives as well as how the range of alternatives was narrowed is available in **Appendix D-2**. Any information on the geotechnical characteristics of the existing structure or the proposed alternative is available in **Appendix D-3** of the Watershed Plan.

1.2 VERTICAL DATUM

All elevations referenced within this report refer to the NAVD 1988 vertical datum.

2 PROPOSED SITE CHARACTERISTICS

2.1 EMBANKMENT

A portion of the top of the embankment at Bylin Dam also serves as 121st Avenue NE. Guidance from *A Policy on Geometric Design of Highways and Streets* (AASHTO, 2018) was used to determine appropriate vertical curve lengths for the proposed embankment. Sheet 2 in the preliminary plan set provided in **Attachment D-4-1** shows the proposed roadway profile and the existing top of dam profile based on topographic survey data collected at the dam. The embankment for Bylin Dam would need to be raised based on requirements discussed in Section 4.3 of this report. To pass the freeboard hydrograph at the dam with the proposed auxiliary spillway width, the top of dam would need to be raised from 1523.8 feet to 1527.7 feet (an increase of 3.9 feet).

A top of embankment width of at least 26 feet is proposed to match the top of embankment width shown in the as-built plans for Bylin Dam. There will be three-cable guard rails on both sides of the road. The existing top of embankment width is approximately 22 feet based on topographic survey data collected at the dam site. The 26-foot width and three cable guard rail will also be adequate based on current NDDOT requirements for township roads. The 26-foot width is greater than the minimum top width required for Bylin Dam based on criteria provided in *Technical Release 210-60: Earth Dams and Reservoirs* (NRCS, 2019), also known as *TR 210-60*. The approximate height of the dam with the proposed embankment in place is approximately 61 feet. Guidance in *TR 210-60* indicates that the minimum top width for a dam that is 61 feet tall is 20 feet. A cross section of the embankment is available on sheet 3 in the preliminary plan set provided in **Attachment D-4-1**.

DRAFT

The downstream slope of the embankment was selected based on geotechnical analyses. The analysis for the downstream embankment is provided in **Appendix D-3**. The slope on the downstream side of the embankment is a 3:1 (H:V) slope between the top of the embankment and the proposed 20-foot-wide bench. The 20-foot-wide bench is at an elevation of 1497.2 feet. From the bench to the toe of the embankment the slope is 3:1 (H:V). To prevent against seepage, a chimney drain will be installed adjacent to the existing downstream embankment. The drain will have a horizontal width of four feet. Sheet 3 within the preliminary plan set in **Attachment D-4-1** shows the chimney drain through the embankment. A new foundation drain will also be implemented to capture any seepage flows through the dam. Additional information on the proposed chimney drain and foundation drain is provided in **Appendix D-3**.

2.2 PRINCIPAL SPILLWAY

An update to the principal spillway for Bylin Dam is required to allow the spillway to pass the principal spillway hydrograph (PSH) without activating the auxiliary spillway. Detailed structural analyses of the condition of the conduit and riser tower currently in-place at the dam site were not completed because the conduit and riser tower both needed to be replaced to pass the PSH. The proposed principal spillway stage-discharge rating curve is shown in **Figure D-4-1** along with the existing principal spillway rating curve. Additional information on the proposed principal spillway conduit, riser tower, and energy dissipation method is provided in the following sub-sections.

2.2.1 PRINCIPAL SPILLWAY CONDUIT

The proposed conduit through the embankment is to be installed via jack and bore construction methods. The jack and bore method is preferred over an open cut method for several reasons. Using an open cut method would be more costly due to the excavation of embankment material and the placement of that material at an acceptable compaction level after the conduit has been placed. Differential settlement of the embankment is possible with the open cut conduit installation method, which could potentially cause discontinuities along the embankment. Additionally, installing the conduit via jack and bore methods would limit traffic disruptions when compared to the open cut methodology.

The proposed principal spillway conduit is to be placed parallel to the existing conduit and will be approximately 30 feet northwest of the existing conduit alignment. The NRCS construction specification for Boring and Jacking (NRCS, 2015) will be used for the conduit installation. The proposed conduit will be a 36” reinforced concrete pipe (RCP). A special design for the conduit may be required to achieve higher concrete compressive strength to counter the extreme jacking pressures anticipated for the long boring distance. The existing 30” conduit will be grouted and abandoned so that it will not cause seepage or stability issues in the future.

Because of the increased embankment height at Bylin Dam, the principal spillway conduit will need to be longer than the existing conduit. The invert elevation of the conduit on the upstream (west) side of the embankment was assumed to remain at the existing invert elevation. The slope of the conduit through the embankment was determined based on guidance provided in NRCS’s *Design Note No. 8 – Entrance Head Losses in Drop Inlet Spillways* (Payne, 1969). The proposed slope of the 36” conduit will be 0.036 feet/feet except for the final 20 feet of the conduit at the outlet, which will have a flatter slope of 0.020 feet/feet. The conduit was simulated in the NRCS SITES program (USDA, 2014) and the resultant design headwater for the principal spillway was verified. Approximately 256 feet of the 36” conduit will be installed with a jack and bore construction methods through the existing embankment. The additional 106 feet of conduit will be placed under the proposed embankment fill using open trench methods.

DRAFT

2.2.2 PRINCIPAL SPILLWAY RISER TOWER

A new principal spillway riser tower is proposed for the preferred alternative at Bylin Dam. The orifice opening for the existing principal spillway riser tower at Bylin Dam would need to be increased to pass the PSH without activating the auxiliary spillway. The existing riser tower would not be salvaged for use with the preferred alternative due to the new and increased size of the principal spillway conduit. Retrofitting the existing riser tower with the jack and bored 36" conduit has the potential to cause issues with the structural stability of the existing riser tower. There were also minor issues associated with the existing riser tower structure at Bylin Dam (see *Existing Conditions Assessment Report* in **Appendix D-1** for more information on minor issues noted for the existing riser tower). The configuration for the existing open top riser tower does not meet current design practices and will be replaced with a two-way covered riser configuration.

Dimensions of the proposed two-way covered top riser were determined based on guidance provided in *Hydraulics of Two-Way Covered Risers* (Alling, 1965). The NRCS SITES program was used to verify that the proposed dimensions would pass the PSH without activating the auxiliary spillway. The orifice opening on the proposed riser tower will be 2.75 feet wide by 2.92 feet tall. The total weir length associated with the second stage of the riser tower is proposed to be 18 feet. Preliminary dimensions of the proposed two-way covered riser tower are shown on sheet 4 in the preliminary plan set shown in **Attachment D-4-1**. Wall and slab thicknesses shown for the riser tower were determined based on guidance provided in *Building Code Requirements for Structural Concrete* (ACI 318-19) and were verified to pass NRCS requirements in *Technical Release 210-30 – Structural Design of Standard Covered Risers* (Alling, 1965). Calculations used to develop wall and slab thicknesses are shown in **Attachment D-4-2**.

2.2.3 LOW-LEVEL DRAWDOWN CONDUIT AND SEDIMENT STORAGE

A low-level drawdown conduit is shown in the preliminary plan set provided in **Attachment D-4-1**. The elevation of the low-level drawdown conduit is set to the same elevation as the as-built low-level drawdown conduit, which is at approximately 1477.6 feet. The minimum elevation in reservoir at the time of the construction of Bylin Dam was approximately 1463.0 feet (based on bathymetric survey data collected in 2020). The minimum elevation of the sediment after the bathymetric survey was completed in 2020 was approximately 1467.4 feet (4.4 feet higher than minimum elevation before construction of the dam). Furthermore, the maximum depth of sediment throughout the reservoir upstream of Bylin Dam is approximately 6.9 feet based on the survey data collected in 2020. Sediment deposition is shown to occur throughout the reservoir upstream of Bylin Dam and does not necessarily fill in at the lowest point in the reservoir first (see **Appendix D-1** for additional information on bathymetric survey data collected).

The proposed low-level drawdown conduit is at 1477.6 feet, which is approximately 10 feet higher than the minimum elevation of sediment in the reservoir observed in 2020. The 10 feet of distance between the minimum sediment elevation in the reservoir and the proposed low-level drawdown invert exceeds the maximum sediment depth that resulted after the dam had existed for 56 years. If deposition continues to occur in a similar manner over the next 100 years after rehabilitation of Bylin Dam, the as-built elevation of the low-level drawdown will be adequate to ensure that there is enough sediment storage below the conduit. Based on the current farming practices in the watershed upstream of Bylin Dam along with sheet, rill, and streambank erosion estimates upstream of the dam, the estimated sediment accumulation rate in the reservoir following rehabilitation is 2.71 acre-feet per year. The project life of the rehabilitation is 100 years. An additional 5 years was used for sediment prediction because bathymetric survey data was completed in 2020 which was the beginning of the planning effort. The timeframe used for sediment accumulation analysis was 105 years. Therefore, the total sediment accumulation expected in the reservoir at the end of

DRAFT

the project life is approximately 280 acre-feet. Throughout the 100-year design life of the dam, sediment will continue to fill in upstream of the reservoir but will not reach the proposed low-level drawdown elevation. Of the 280 acre-feet of sediment accumulation, 251 acre-feet (90% of total sediment) is expected to be submerged sediment and 29 acre-feet (10% of total sediment) is expected to be aerated sediment.

The low-level drawdown conduit type, size, and invert elevation will be reviewed during final design of the preferred alternative.

2.2.4 PRINCIPAL SPILLWAY ENERGY DISSIPATION

A riprap lined plunge pool is proposed at the outlet of the principal spillway conduit to serve as the energy dissipation method. Guidance from NRCS's *Design Note No. 6 – Riprap Lined Plunge Pool for Cantilever Outlet* (Goon, 1986) was used to determine appropriate dimensions and riprap size for the plunge pool. In total, approximately 240 cubic yards of riprap would be needed for the plunge pool at the outlet of the conduit. The proposed conduit will be bored through the existing embankment north of the existing plunge pool. Some channel work will be needed to transition the plunge pool to the existing outlet channel. Sheet 1 in the preliminary plan set provided in **Attachment D-4-1** shows the location of the proposed plunge pool and the additional channel work to be completed at the conduit outlet. Calculations used to develop the dimensions of the plunge pool are provided in **Attachment D-4-3**.

2.3 AUXILIARY SPILLWAY

Improvements to the auxiliary spillway for Bylin Dam are required to allow the spillway to pass the freeboard hydrograph (FBH) without breaching. Parameters determined during the geologic exploration of soils in the auxiliary spillway showed that the dam would breach under the existing condition. The preferred alternative involves lining the existing auxiliary spillway with articulated concrete block (ACB) to avoid breaching the spillway during passage of the FBH. Different hardening options for the spillway were analyzed and the ACBs were chosen because they are the most cost effective. The proposed plan and profile view of the auxiliary spillway is provided on sheet 1 in the preliminary plan set located in **Attachment D-4-1**. Additional information on the preliminary design of the auxiliary spillway is provided in the following sub-sections.

2.3.1 AUXILIARY SPILLWAY APPROACH SECTION

The approach section of the auxiliary spillway will remain the same as the existing conditions auxiliary spillway approach section. The approach section is vegetated with the exception of the 121ST Avenue NE corridor. The approach section turns before reaching the spillway crest, which has the potential to reduce hydraulic efficiency through the spillway. For that reason, a detailed two-dimensional HEC-RAS hydraulic model (HEC-RAS version 6.1) was developed to determine a more accurate stage-discharge rating curve through the auxiliary spillway. Flows for the FBH were routed through the detailed two-dimensional model with the curved approach section, and the required top of dam elevation described in Section 2.1 was determined.

2.3.2 AUXILIARY SPILLWAY CREST AND DOWNSTREAM CHANNEL

The proposed spillway will have a broad crest that has a 300-foot bottom width and 3:1 (H:V) side slopes. At the auxiliary spillway control section, the crest and side slopes of the spillway would be lined with ACB up to the top of dam elevation. Therefore, the auxiliary spillway control section will be protected from any potential erosion at the spillway crest elevation up to the top of dam elevation.

DRAFT

The channel downstream of the crest will also have a 300-foot bottom width and 3:1 (H:V) side slopes. The channel would have a slope of 0.13 feet/feet (13%) and would also be lined with ACB. The size of ACB required was determined using guidance provided in the *National Engineering Handbook, Part 628 – Dams, Chapter 54 – Articulated Concrete Block Armored Spillways* (Fripp & Visser, 2019). Calculations used to ensure the adequacy of the ACB are provided in **Attachment D-4-4**. The vertical height to which the ACB would line the spillway would transition from the top of dam height near the crest of the spillway to a minimum vertical height of three feet along the steep portion of the channel (see sheet 1 in the preliminary plan set provided in **Attachment D-4-1** for a cross section view of the auxiliary spillway channel). The vertical height of ACB on the side slope of the auxiliary spillway was determined based on review of the maximum water surface profile along the channel in the detailed two-dimensional HEC-RAS model.

2.3.3 AUXILIARY SPILLWAY OUTLET

The auxiliary spillway will go down at a 0.13 feet/feet (13%) slope until it gets to an elevation near the floodplain elevation of the North Branch Forest River. At that point the spillway will transition from the 13% slope to a relatively flat slope of 0.1% until the outlet of the spillway into the North Branch Forest River. A portion of the mildly sloped section would also be covered with ACB. Below the ACB, a shallow concrete cutoff wall (approximately 3.7' tall) is proposed to tie into the underlying Pierre shale. Additional strengthening of the ACB matting would be applied where a hydraulic jump would occur. The auxiliary spillway outlet is shown on sheet 1 in the preliminary plan set located in **Attachment D-4-1**. At the peak water surface elevation during passage of the FBH, preliminary hydraulic modeling indicates that the hydraulic jump would occur approximately seven feet above the mildly sloped portion of the auxiliary spillway. Additional grouting of the ACB where the hydraulic jump occurs will prevent the movement of the subsurface drainage layer beneath the concrete blocks.

3 HAZARD CLASSIFICATION

The process to determine the current hazard classification for Bylin Dam is provided in the *Existing Conditions Assessment Report* for Bylin Dam located in **Appendix D-1**. A similar process was followed to determine the hazard classification for the proposed structural alternative for Bylin Dam.

3.1 BREACH CRITERIA AND RESULTS

The peak discharge criteria for the dam breach were developed using equations found in Chapter 1 of *Technical Release 210-60 Earth Dams and Reservoirs* (NRCS, 2019). Based on *TR 210-60*, the failure or breach of the dam is to be evaluated with the water surface elevation of the reservoir at the dam crest or the peak reservoir stage resulting from the probable maximum flood (PMF). The peak breach discharge calculated for the proposed conditions at Bylin Dam was approximately 107,000 cubic feet per second. The resulting breach outflow hydrograph for Bylin Dam is shown on **Figure D-4-2**. Peak breach discharge calculations and data are provided in **Attachment D-4-5**.

The downstream water surface profiles for the dam breach were developed using the hydraulic model described in the *Existing Conditions Assessment Report* (**Appendix D-1**). The breach dimensions were selected based the Froehlich Equations (Froehlich, 2008). The inundation produced from the simulated breach based on *TR 210-60* criteria is shown through the breach zone in **Figure C-4** in **Appendix C**. **Figure C-5** through **Figure C-8** show detailed views of the inundation mapping along with structures affected and roads overtopped throughout the breach zone. All residential structures impacted by the dam breach are summarized and labeled in the breach inundation figures in **Appendix C**. **Table D-4-1** provides data on

DRAFT

maximum inundation depth of the structure, maximum velocity of flow at the structure location, and the amount of time it would take for the breach discharge to reach the structure.

***Table D-4-1**: Residential Structures Impacted by a Breach of Bylin Dam*

Structure ID	Depth (ft)	Velocity (ft/s)	Arrival Time[1] (hours)
S1	8.3	0.6	0
S2	19.0	3.0	1
S3	23.3	3.9	1
S4	23.5	6.4	1
S5	14.4	2.7	1
S6	29.4	6.6	1
S7	0.0	2.6	3
S8	0.0	0.0	3
S9	0.1	0.3	4
S10	0.6	0.7	4
S11	1.1	1.8	4
S12	0.1	0.7	7
S13	0.5	0.5	6
S14	0.4	1.3	5
S15	0.0	0.3	8
S16	1.2	1.6	6
S17	0.0	0.2	13
S18	0.0	0.5	10
S19	0.2	0.7	9

[1] Breach arrival time is relative to the initiation of the dam breach

There are various instances of roads being overtopped during the breach scenario. For this analysis, only roads with an average annual daily traffic (AADT) value greater than 400 are considered. Smaller roads, such as township roads, are less likely to have vehicles on them during a breach. The only road in the breach zone with an AADT value in excess of 400 is North Dakota State Highway 32, which overtops in three different locations. The road overtopping locations are shown in **Figure C-6** and **Figure C-7**. Information about the three overtopping locations on North Dakota State Highway 32 is provided in **Table D-4-2**.

***Table D-4-2**: Road Overtopping Data for ND Highway 32 During a Breach of Bylin Dam.*

Road ID	Depth (ft)	Velocity (ft/s)	Arrival Time[1] (hours)
R1	1.5	3.7	4

Road ID	Depth (ft)	Velocity (ft/s)	Arrival Time[1] (hours)
R2	0.9	1.7	7
R3	1.1	2.4	7

[1] Breach arrival time is relative to the initiation of the dam breach

The structures and roadways listed in **Table D-4-1** and **Table D-4-2** were analyzed further to determine if there is the potential for loss of life during a breach of the magnitude described. Depth and velocity flood danger level relationships established in *Downstream Hazard Classification Guidelines* (U.S. Bureau of Reclamation, 1988) were used to determine which structures and roads have a high danger potential during a breach at Bylin Dam.

The chart from *Downstream Hazard Classification Guidelines* that shows the depth-velocity flood danger level relationship for homes built on foundations is shown on **Figure D-4-3**. The structures corresponding to **Table D-4-1** are also plotted on **Figure D-4-3**. Structures plotted in the red are categorized as having a high danger level, indicating that loss of life is likely. Structures in the yellow fall into what is called the judgement zone where some level of engineering judgement should be used to determine if the structure has a high or low danger potential. Structures plotted in the green area have a low danger level, and loss of life is not likely. **Figure D-4-3** shows that there are six structures in the high danger (red) zone. Therefore, a total of six out of the nineteen total residential structures would have a high danger potential for loss of life if Bylin Dam were to breach with the magnitude required in *TR 210-60*. The six structures that have a high danger potential are shown as red triangles in breach inundation figures in **Appendix C**. The remaining structures that are in the low danger potential category are shown as green triangles in those same figures.

The hazard potential for habitable structures was also reviewed based on guidance in the National Engineering Manual (NRCS, 2017), which indicates that products of four or greater that result from depth (in feet) and velocity (in feet per second) combinations could result in loss of life. The six structures identified as high danger potential all have depth and velocity products greater than four and structures in the low danger potential category have depth and velocity combinations that result in a product of less than four. Therefore, the methods used to identify habitable structures within the breach zone that may experience loss of life during a breach were verified by criteria in the National Engineering Manual.

Another chart in *Downstream Hazard Classification Guidelines* (U.S. Bureau of Reclamation, 1988) shows the depth-velocity flood danger level relationship for passenger vehicles. That chart can be seen on **Figure D-4-4**. The three road overtopping locations along North Dakota State Highway 32 (listed in **Table D-4-2**) are plotted on **Figure D-4-4** as well. **Figure D-4-4** shows that all three overtopping locations fall in the low danger category and loss of life due to flooding over the road is not likely.

3.2 HAZARD CLASSIFICATION

Title 210, National Engineering Manual, Part 520 Subpart C "Dams" (NRCS, 2017) describes the hazard potential resulting from failure of dams. According to this guidance, a high hazard potential is "Dams where failure may cause loss of life or serious damage to homes, industrial or commercial buildings, important public utilities, main highways, or railroads."

DRAFT

A similar definition is outlined in Article 89-08 of the North Dakota Century Code (ND SWC, 2015) where a high hazard dam is defined as, “A dam located upstream of developed or urban areas where failure may cause serious damage to homes, industrial and commercial buildings, and major public utilities. There is potential for the loss of more than a few lives if the dam fails.”

Based on the data presented in Section 3.1, Bylin Dam will be classified as a high hazard dam with the proposed dam modifications in place.

4 DAM SAFETY REQUIREMENTS

Requirements for minimum hydrologic criteria associated with the proposed alternative for Bylin Dam were determined based on guidance provided in *TR 210-60*. Based on results previously presented in Section 3.2, Bylin Dam is classified as a high hazard dam with the proposed structural alternative in place. The minimum precipitation criteria outlined in *TR 210-60* for high hazard dams is shown in **Table D-4-3**, and each of the design hydrographs is described in more detail in the following sub-sections. The procedures followed to develop the results for the principal spillway hydrograph, auxiliary spillway hydrograph, and freeboard hydrograph are similar to the procedures described in the *Existing Conditions Assessment Report* provided in **Appendix D-1**. The calibrated hydrologic and hydraulic models used to develop results in **Appendix D-1** were also used for the analysis completed for the proposed condition.

***Table D-4-3**: Technical Release 210-60 Minimum Precipitation Data for High Hazard Dams*

Design Event Hydrograph	Hydrologic Criteria [1]	Depth (inches)
Principal Spillway Hydrograph (PSH)	P_{100}	4.7 [2] 7.4 [3]
Auxiliary Spillway Hydrograph (ASH)	P_{100} + 0.26(PMP - P_{100})[4]	9.5 [5]
Freeboard Hydrograph (FBH)	PMP	21.6 [5]

[1] P_{100} represents the precipitation for the 100-year return period. PMP is the probable maximum precipitation.
[2] Runoff depth based on *NEH Part 630 Chapter 21*.
[3] Rainfall depth based on *NOAA Atlas 14*.
[4] P_{100} depth used to calculate the Auxiliary Spillway depth utilized the NOAA Atlas 14 published depth for equivalent duration events.
[5] Depths represent the total rainfall depths that result in the maximum outflow from Bylin Dam.

4.1 PSH DESIGN EVENTS

Based on *TR 210-60*, the principal spillway of a high hazard dam must pass the 100-year return period storm (minimum) with a duration not less than 10-days without activating the auxiliary spillway. The runoff volume maps procedure and runoff curve number procedure described in the *Existing Conditions Assessment Report* (**Appendix D-1**) were simulated with the proposed principal spillway in place for Bylin Dam. Based on results from the SITES analysis, the most critical principal spillway hydrograph was determined to be the hydrograph resulting from the runoff volume maps procedure with mass curve B applied. The flow that occurs during that runoff event passes through the principal spillway and does not activate the auxiliary spillway. SITES inputs and outputs for the principal spillway hydrograph are provided, in **Attachment D-4-6**.

DRAFT

***Table D-4-4**: Principal Spillway Hydrograph SITES Output for Proposed Structural Alternative*

Parameter	Value
Proposed Auxiliary Spillway Crest Elevation (ft, NAVD88)	1,518.6
Peak Stage During PSH (ft, NAVD88)	1,515.6
Peak Discharge During PSH (cfs)	190
Peak Flood Storage Volume (Ac-Ft)	3,590
Time to Drawdown 85% of Flood Storage (days)	11
10-day Volume to Add to the Peak Storage (Ac-Ft)	619
Required Auxiliary Spillway Crest Elevation (ft, NAVD88)	1,518.4

The proposed spillway does not draw the reservoir down to less than 15% of the retarding volume storage 10 days after the peak reservoir stage is reached as is required in *TR 210-60*. Therefore, the volume that remains 10 days after the peak stage occurs is added to the peak storage value. The results provided in **Table D-4-4** show that the peak reservoir elevation during passage of the PSH was only at 1,515.6, however, with the 10-day drawdown requirement not met, the volume of storage remaining after 10 days was added to that peak elevation and the resultant auxiliary spillway elevation required was lower than the proposed auxiliary spillway elevation. Results from the PSH are provided in **Table D-4-4**.

4.2 ASH DESIGN EVENTS

The stability, or surface erosion potential, of earthen auxiliary spillways is analyzed using the auxiliary spillway design hydrograph. The capacity of the auxiliary spillway during passage of the auxiliary spillway hydrograph in combination with wave and frost protection was also analyzed. The design event for the auxiliary spillway hydrograph of a high hazard dam involves a combination of the probable maximum precipitation (PMP) depth and 100-year rainfall depth. According to *TR 210-60*, a short-duration storm should be used to check the stability of vegetated auxiliary spillways. A 12-hour duration rainfall event was used to assess the stability and capacity of the auxiliary spillway as it relates to the auxiliary spillway hydrograph. More information on the capacity and stability of the auxiliary spillway during passage of the auxiliary spillway hydrograph is available in the following sub-sections.

4.2.1 AUXILIARY SPILLWAY CAPACITY

The capacity of the auxiliary spillway should be adequate to pass the auxiliary spillway hydrograph in combination with either wave height, or frost conditions, without overtopping the dam embankment based on requirements in *TR 210-60*. The maximum wave height for Bylin Dam was computed using *A Guide for Design and Layout of Vegetated Wave Protection for Earthen Embankments and Shorelines* (NRCS, 2014). Based on a maximum fetch of 1,160 feet and overwater wind velocity of 83 miles per hour, a maximum wave height of 1.3 feet was computed. Based on the SITES analysis completed for the proposed alternative, the maximum water surface elevation of the reservoir during passage of the

auxiliary spillway hydrograph was approximately 1523.0 feet. Therefore, the proposed embankment elevation (1527.7 feet) is greater than the maximum wave height computed (1.3 feet) plus the anticipated crest of the water surface elevation during passage of the auxiliary spillway hydrograph (which results in a required embankment height of at least 1524.3 feet).

Frost conditions were also considered for the proposed alternative. The top of embankment elevation is approximately 4.7 feet higher than the peak water surface elevation that occurs during passage of the auxiliary spillway hydrograph. Frost heave in excess of the 4.7 feet is not practical, which means that the top of embankment elevation is adequate to pass the auxiliary spillway hydrograph without overtopping due to frost conditions.

4.2.2 AUXILIARY SPILLWAY STABILITY

For the proposed alternative at Bylin Dam, the auxiliary spillway will be lined with ACB. Therefore, the auxiliary spillway hydrograph was not considered for the proposed structural alternative because the stability of the spillway is dependent on soil and vegetal stresses on the surface of the auxiliary spillway. In this case the ACB is considered adequate to prevent against surface erosion during passage of the auxiliary spillway hydrograph.

4.3 FBH DESIGN EVENTS

The freeboard hydrograph is used to analyze the capacity and integrity of the dam. The design event for the freeboard hydrograph of a high hazard dam is a probable maximum precipitation (PMP) event, which produces the probable maximum flood (PMF). More information on the capacity and integrity of the auxiliary spillway during passage of the freeboard hydrograph is available in the following sub-sections.

4.3.1 AUXILIARY SPILLWAY CAPACITY

To pass the auxiliary spillway capacity criteria described in *TR 210-60*, the dam must be able to pass the PMF through the principal spillway structure and the auxiliary spillway without overtopping the dam. The drawdown requirements discussed in Section 4.1 are not met during passage of the PSH. Therefore, based on requirements in *TR 210-60*, the starting elevation of the reservoir upstream of Bylin Dam during the FBH is the elevation of the reservoir 10 days after the peak stage in the reservoir is reached for the PSH design event. For Bylin Dam, the starting water surface elevation for the reservoir was set to 1,508.3 feet during passage of the FBH. Durations of 6-hours through 72-hours were simulated using PMP depths obtained from the statewide PMP study for North Dakota. The controlling duration and storm type for all of the events considered is the 12-hour local storm PMP. The resulting stage and discharge at the dam is provided in **Table D-4-5**. Outputs from the SITES program for the auxiliary spillway capacity associated with the proposed alternative are provided in **Attachment D-4-6**. The SITES model was used for an initial estimate for the required top of embankment elevation, but a more accurate top of embankment elevation was obtained using a more robust, two-dimensional HEC-RAS (version 6.1) hydraulic model.

DRAFT

***Table D-4-5**: Freeboard Hydrograph Results for Proposed Structural Alternative*

Parameter	Value
Peak Inflow (cfs)	21,314
Peak Principal Spillway Outflow (cfs)	166
Peak Auxiliary Spillway Outflow (cfs)	19,705
Peak Total Outflow (cfs)	19,871
Proposed Top of Dam Elevation (ft, NAVD88)	1527.7
Peak Elevation During Passage of the FBH (ft, NAVD88)	1527.7

4.3.2 AUXILIARY SPILLWAY INTEGRITY

TR 210-60 requires that the auxiliary spillway pass the freeboard design hydrograph without breaching the control section of the auxiliary spillway. To ensure the adequacy of the ACB during passage of the freeboard hydrograph, guidance in the *National Engineering Handbook, Part 628 – Dams, Chapter 54 – Articulated Concrete Block Armored Spillways* (Fripp & Visser, 2019). Calculations used to ensure the adequacy of the ACB are provided in **Attachment D-4-4**. Maximum flow and velocity produced during passage of the freeboard hydrograph was used to assess the proposed block dimensions and their adequacy. The required factor of safety for the articulated block when the maximum velocity occurs in the channel is 2.0. The factor of safety is dependent on the weight of the block, along with drag and lift forces on the block. The calculated factor of safety for the ACB proposed for the spillway lining at Bylin Dam is 2.03. Therefore, the ACB will not fail during passage of the freeboard hydrograph and spillway integrity is considered adequate.

5 SYNTHETIC EVENTS AND SITE PERFORMANCE

5.1 HYDROLOGY

Synthetic rainfall events were simulated for 2-, 5-, 10-, 25-, 50-, 100-, and 500-year recurrence intervals in the Forest River Watershed. Rainfall depths were obtained from NOAA Atlas 14, Volume 8, Version 2. Previous planning efforts to complete a Watershed Plan through the Regional Cooperation Partnership Program (RCPP) included an evaluation of 24-hour, 4-day, and 10-day duration rainfall events. That analysis showed that the 4-day duration rainfall events were the most critical for the Forest River Watershed (i.e., the 4-day duration rainfall would cause more damage than the 24-hour or 10-day rainfall events).

Various rainfall durations were simulated for the North Branch Forest River Watershed. Immediately downstream of Bylin Dam, peak flow rates are highest for the 4-day rainfall events when compared to the 24-hour and 10-day rainfall events. Further downstream near North Dakota State Highway 32, the peak flows for the 4-day duration rainfall events are similar to the peak flows for the 24-hour rainfall events (peak flows are within 1% of each other), however, the increased volume that results from the 4-day duration rainfall would increase flood duration on agricultural land, which would result in increased damages. The

10-day rainfall events had substantially lower peak flows at all locations within the watersheds. Therefore, the 4-day rainfall events were verified as the critical duration for the North Branch Forest River Watershed.

Runoff depths were computed using the SCS Curve Number method within a HEC-HMS hydrologic model. 24-hour curve number values were developed during previous planning efforts within the Forest River Watershed. Additional detail on the development of the curve numbers is available in the *Existing Conditions Hydrology and Hydraulics Report* for the entire Forest River Watershed completed by Houston Engineering Inc. (2019). Land use grids were overlayed with hydrologic soil group data to develop a curve number grid for the entire Red River basin as part of the *Red River of the North Hydrologic Modeling – Phase 2* report (USACE, 2013). That 24-hour curve number grid was used for this analysis. 24-hour curve numbers were adjusted to reflect the four-day duration used for this analysis by interpolating between 24-hour curve numbers and 10-day curve numbers. The conversion was completed using Table 21-2 in Chapter 21 of Part 630 within the National Engineering Handbook (NRCS, 2019). The average rainfall and runoff depths for subbasins in the North Branch Forest River Watershed are shown in **Table D-4-6**.

***Table D-4-6**: North Branch Forest River Watershed Four-Day Rainfall and Runoff Depths*

Recurrence Interval	Rainfall Depth (inches)	Runoff Depth (inches)
2-year	2.7	0.4
5-year	3.4	0.8
10-year	4.0	1.1
25-year	4.9	1.7
50-year	5.6	2.2
100-year	6.4	2.8
500-year	8.4	4.4

Subbasin flows were developed using a Clark Unit Hydrograph transform, which involves the use of the time of concentration and a storage coefficient. Those parameters were calibrated by simulating historic rainfall events. The calibration of the hydrologic and hydraulic models is discussed in **Appendix D-1**.

5.2 HYDRAULICS AND RESULTING INUNDATION

Flows developed within the HEC-HMS hydrologic model were routed through a HEC-RAS version 5.0.7 hydraulic model. The hydraulic model is described in detail in the *Existing Conditions Assessment Report* located in **Appendix D-1**. The performance of Bylin Dam during the various recurrence intervals is shown in **Table D-4-7**. **Figure D-4-4** shows the inundation at the reservoir upstream of Bylin Dam during each of the recurrence intervals analyzed. The elevation of the auxiliary spillway for Bylin Dam will be at 1518.6 feet, which matches the existing auxiliary spillway elevation. For the rainfall events simulated, only the 500-year rainfall event would cause the auxiliary spillway to be activated. Similarly, the elevation of the second stage of the principal spillway will stay the same as the existing second stage of the spillway, which is at

1511.3 feet. The second stage of the principal spillway would only be activated during the 100- and 500-year events. Discharge downstream of Bylin Dam is significantly reduced with the proposed alternative in place. The peak inflow value listed in **Table D-4-7** would be the discharge at the dam location if there were no dam in place. The percent reduction to the flow is also listed in **Table D-4-7** to quantify the decreased discharge as a result of the dam.

***Table D-4-7**: Bylin Dam Site Performance During Synthetic Rainfall Events*

Recurrence Interval	Stage (ft, NAVD88)	Storage (Acre-feet)	Peak Inflow (cfs)	Peak Outflow (cfs)	Percent Reduction (%)
2-year	1,496.0	930	383	70	82%
5-year	1,499.5	1,244	706	107	85%
10-year	1,502.7	1,583	1,050	127	88%
25-year	1,507.0	2,132	1,624	150	91%
50-year	1,510.4	2,648	2,150	167	92%
100-year	1,513.7	3,220	2,738	189	93%
500-year	1519.3	4,384	4,375	865	80%

To assess the impact of the proposed alternative, two scenarios were simulated in HEC-RAS; one with the preferred alternative in place, and one with the dam removed from the system. The resulting inundation for the four-day synthetic rainfall events was obtained using the RASMapper application. Inundation grids were extracted for the simulated events. The total inundation in the North Branch Forest River Watershed for the scenario without Bylin Dam, and with the proposed alternative in place, are provided in **Table D-4-8**. Inundation extents for the various synthetic events simulated are provided in **Appendix C**.

DRAFT

***Table D-4-8**: North Branch Forest River Watershed Inundation for Synthetic Rainfall Events*

Recurrence Interval	Total Inundation without Dam (Acres)	Total Inundation with Proposed Alternative (Acres)	Percent Reduction
2-year	755.4	541.2	28%
5-year	1416.5	975.1	31%
10-year	2147.8	1426.8	34%
25-year	2950.1	2070.6	30%
50-year	3439.1	2568.3	25%
100-year	3843.7	3039.3	21%
500-year	4964.6	3874.2	22%

6 ESTIMATED PROJECT COST

The engineer's estimated project cost is shown in **Table D-4-9**. Quantities were based on preliminary design of the proposed alternative. Unit prices were estimated based on previous projects completed in the region, estimates from suppliers, or other NRCS dam rehabilitation projects. Unit prices are estimated in 2021 dollars. Costs will likely change due to market conditions, fluctuations in material costs, inflation, and other factors at the time of bidding and construction for the project. Costs for ACB material and installation have increased significantly over the past 12 months and there is uncertainty as to whether the material and installation cost will stabilize prior to construction of the dam rehabilitation.

A preliminary plan set was completed for the proposed alternative and is available in **Attachment D-4-1**.

***Table D-4-9**: Preliminary Engineer's Opinion of Probable Cost*

No.	Item	Unit	Quantity	Unit Price [1]	Total Price
1	Mobilization	LS	1	$ 580,000.00	$ 580,000.00
2	Stripping and Topsoiling	CY	12,000	$ 2.50	$ 30,000.00
3	Embankment Fill	CY	45,800	$ 10.00	$ 458,000.00
4	Excavation	CY	45,800	$ 3.00	$ 137,400.00
5	Tree Removal	LS	1	$ 10,000.00	$ 10,000.00
6	Riser Tower - Removal of Existing	LS	1	$ 30,000.00	$ 30,000.00
7	Riser Tower - Structural Concrete	CY	64	$ 1,300.00	$ 83,200.00
8	Riser Tower - Dewatering	LS	1	$ 100,000.00	$ 100,000.00
9	Low Flow - 12" RCP	LF	40	$ 75.00	$ 3,000.00
10	Riser Tower - 18" Slide Gate	EA	1	$ 20,000.00	$ 20,000.00
11	Riser Tower - 18" Wall Thimble	EA	1	$ 5,000.00	$ 5,000.00
12	Debris Cage	LS	1	$ 25,000.00	$ 25,000.00
13	Grout Existing Conduit	LF	304	$ 100.00	$ 30,400.00
14	36" RCP Jack and Bore Conduit	LF	256	$ 1,500.00	$ 384,000.00

No.	Item	Unit	Quantity	Unit Price [1]	Total Price
15	36" RCP	LF	106	$ 300.00	$ 31,800.00
16	ACBs (EPEC System 900 OCT)	SF	159,300	$ 30.00	$ 4,779,000.00
17	ACB - Stone Drainage Layer	CY	2,950	$ 20.00	$ 59,000.00
18	Concrete Sill - Structural Concrete	CY	90	$ 1,000.00	$ 90,000.00
19	Rip Rap (NDDOT Grade II 28")	CY	240	$ 100.00	$ 24,000.00
20	Fine Drain Fill	CY	4,250	$ 140.00	$ 595,000.00
21	Coarse Drain Fill	CY	400	$ 130.00	$ 52,000.00
22	12" Dual wall HDPE	LF	580	$ 40.00	$ 23,200.00
23	Erosion Control	LS	1	$ 80,000.00	$ 80,000.00
24	Seeding and Mulching	AC	10	$ 1,500.00	$ 15,000.00
25	Road Reconstruction	LS	1	$ 134,000.00	$ 134,000.00
26	Traffic Control	LS	1	$ 10,000.00	$ 10,000.00
Construction Subtotal					**$ 7,789,000.00**
Contingencies (15%)					$ 1,206,000.00
Total Construction Costs					**$ 8,995,000.00**
	Design Engineering				$ 800,000.00
	Construction Engineering				$ 800,000.00
	Permitting				$ 10,000.00
	Project Administration				$ 50,000.00
Non-Construction Cost					**$ 1,660,000.00**
Total Estimated Project Cost					**$ 10,660,000.00**

[1] 2021 Dollars

7 SUMMARY

The proposed design elements of the structural alternative for Bylin Dam are described in this report and a preliminary construction cost estimate for the alternative is provided. NRCS guidelines and requirements were followed to develop the dimensions and elevations of the proposed structural alternative. The alternative includes raising the dam embankment 3.9 feet higher than the existing embankment elevation, constructing a new riser tower, installing a proposed 36” diameter conduit via jack and bore construction methods, modifying the slope of the auxiliary spillway channel, and lining the auxiliary spillway with ACB. Following completion of the Watershed Plan for the North Branch Forest River Watershed Forest River Dam #1, final design of the structural alternative will be completed. The final design of the proposed structural alternative may indicate that minor modifications to the plan are required before construction takes place.

DRAFT

8 REFERENCES

AASHTO. (2018). *A Policy on Geometric Design of Highways and Streets* (6th ed.). Washington, DC: AASHTO.

Alling, E. S. (1965). *Technical Release 210-29: Hydraulics of Two-Way Covered Risers.* Hyattsville: NRCS.

Alling, E. S. (1965). *Technical Release 210-30: Structural Design of Standard Covered Risers.* Hyattsville: NRCS.

Fripp, J., & Visser, K. (2019). *National Engineering Handbook, Title 210, Part 628, Chapter 54 – Articulated Concrete Block Armored Spillways.* Fort Worth: NRCS.

Froehlich, D. C. (2008). Embankment Dam Breach Parameters and Their Uncertainties. *ASCE, Journal of Hydraulic Engineering, Vol. 134, No. 12*, 1708-1721.

Goon, H. (1986). *Design Note No. 6 - Riprap Lined Plunge Pool for Cantilever Outlet* (2nd ed.). Washington, D.C.: NRCS.

Houston Engineering Inc. (2019). *Forest RIver Watershed Plan - Existing Conditions Hydrology and Hydraulics Report.* Fargo.

ND SWC. (2015). *Article 89-08 Dams, Dikes, and Other Devices.* Bismarck, ND: North Dakota Legislative Branch.

NRCS. (2014, April). *Technical Release 56: A Guide for Design and Layout of Vegetated Wave Protection for Earthen Embankments and Shorelines.* Washington, DC: USDA.

NRCS. (2015). *National Engineering Handbook, Title 210, Part 642, Chapter 2 – National Construction Specifications, Construction Specification 54 - Boring and Jacking.*

NRCS. (2017). Part 520 - Soil and Water Resource Development, Subpart B - Floodplain Management. In *Title 210 - National Engineering Manual* (4th ed., pp. 520-B.2). NRCS.

NRCS. (2017). Part 520 - Soil and Water Resource Development, Subpart C - Dams. In *Title 210 - National Engineering Manual.* NRCS.

NRCS. (2019). Chapter 21: Design Hydrographs. In *Part 630 Hydrology, National Engineering Handbook.* NRCS.

NRCS. (2019). *Technical Release 210-60: Earth Dams and Reservoirs.* NRCS.

Payne, A. (1969). *Technical Note Title 210, Design Note No. 8 – Entrance Head Losses in Drop Inlet Spillways.* NRCS.

U.S. Bureau of Reclamation. (1988). *ACER Technical Memorandum 11 - Downstream Hazard Classification Guidelines.* Engineering and Research. Denver, CO: U.S. Department of the Interior.

USACE. (2013). *Red River of the North Hydrologic Modeling - Phase 2.*

USDA. (2014). SITES Integrated Development Environment (Version 2005.1.8). USDA and KSU.

DRAFT