United States Department of Agriculture | Soil Conservation Service | 160 East 7th Street Chester, PA 19013-6092

Subject: Ground-penetrating Radar (GPR) and Electromagnetic Induction (EM) Surveys in Pike, Centre, and Perry counties; September 16-19, 1991

Date: October 22, 1991

To: Richard N. Duncan
State Conservationist
Soil Conservation Service
Harrisburg, PA

Purpose:
To collect data with the ground-penetrating radar on the depth to bedrock within several soil map units in Pike County. In Centre and Perry counties, using electromagnetic induction methods, detected the presence and location of seepage from a constructed pond and established baseline surveys prior to the construction of a manure stacking area and storage pond.

Participants:
Tom Balthaser, District Conservationist, SCS, New Bloomfield, PA
Bruce Benton, Geologist, SCS, Harrisburg, PA
Jim Bistline, Soil Conservation Technician, SCS, New Bloomfield, PA
Tim Craul, Soil Scientist, SCS, Milford, PA
Jim Doolittle, Soil Specialist, SCS, Chester, PA
George Skovran, Civil Engineer, SCS, Lebanon, PA
Pete Vanderstappen, Ag. Engineer, SCS, State College, PA
Ed White, Soil Correlator, SCS, Harrisburg, PA

Activities:
Transects were conducted with the GPR in Pike County on 16 and 17 September 1991. Surveys of the Pennsylvania State Agricultural Progress Farm's pond and the Pennsylvania State manure stacking sites were completed on 18 September 1991. A baseline EM survey was completed of the Amos Hoover HDP lined manure storage pond on 19 September 1991.

Equipment:
The ground-penetrating radar unit is the Subsurface Interface Radar (SIR) System-8 manufactured by Geophysical Survey Systems, Inc. [1]. Components of the SIR System-8 used in this study were the model 4800 control unit, ADTEK SR 8004H graphic recorder, power distribution

---

1. Use of trade names in this report is for identification purposes only and does not constitute endorsement.

unit, transmission cable (30 m), and the model 3110 (120 MHz) antenna. The system was powered by a 12-volt vehicular battery.

The electromagnetic induction meter used was the EM31 manufactured by GEONICS Limited. Measurements of conductivity are expressed as milliSiemens per meter (mS/m). With the EM31 meter in the horizontal dipole mode, the scanning depth is about 2.75 meters. With the EM31 meter in the vertical dipole mode, the scanning depth is about 5.5 meters. Measurements reflect the bulk conductivity averaged over a lateral distance of about 4 meters.

Results:
Geophysical tools provided a rapid, cost effective, and nondestructive method for quality assurance and site assessments. Compared with conventional methods these tools provide greater areal coverage per unit time and cost.

Data collected in Pike County will help to insure the accuracy of map unit descriptions and interpretations, and the validity of map unit names. The baseline EM surveys will provide vital data needed to assess the potential movements of water and contaminants from structures.

It was my pleasure to work in your state and with members of your fine staff.

With kind regards.

James A. Doolittle
Soil Specialist

cc:
B. Benton, Geologist, SCS, Harrisburg, PA
A. Dornbusch, Jr., Director, MWNTC, SCS, Lincoln, NE
A. Holland, Director, NENTC, SCS, Chester, PA
E. Knox, National Leader, SSIV, NSSC, SCS, Lincoln, NE
G. Lipscomb, State Soil Scientist, SCS, Harrisburg, PA
C. Olson, Research Soil Scientist, SSIV, NSSC, SCS, Lincoln, NE

Discussion:

Depth to Bedrock

Soil scientists recognize the need to acquire improved data on the depths to bedrock in upland soil map units. In many upland soils, coarse fragments restrict conventional surveying tools and results are inconclusive. The GPR has been recognized as an efficient tool for bedrock investigation.

Sites for radar transects were selected by the soil party leader prior to the arrival of the unit. Pike County contains large acreage of rugged, forested terrain. Because of the inaccessibility of the terrain, transect sites were located along forest trails which contained a minimum of cuts and fills. Transects were conducted across multiple units with observation sites located at 100 foot intervals along each traverse.

Sites traversed with the GPR included areas which had been mapped as Culver (coarse-loamy, mixed, mesic, Typic Fragiochrepts), DeKalb (loamy-skeletal, mixed, mesic Typic Dystrochrepts), Oquaga (loamy-skeletal, mixed, mesic Typic Dystrochrepts), Swartswood (coarse-loamy, mixed, mesic, Typic Fragiochrepts), and Wurtsboro (coarse-loamy, mixed, mesic, Typic Fragiochrepts) soils.

The depths to bedrock were estimated and recorded for each map unit on the radar profiles. All radar profiles have been returned to Tim Cruel. Tables 1 through 5 summarize the frequency of observation by soil depth classes for each map unit.

Table 1
Frequency of Observations of the Depths to Bedrock
Compiled from GPR Transects
in areas of
CuB - Culver extremely stony loam, 0 to 8 % slope

	Depth to Bedrock (in Inches)				
Transect #	0-10	10-20	20-40	40-60	>60
1	1	1	2	-	6
2	-	-	1	1	8
3	-	-	-	-	10
4	-	-	-		10

Table 2
Frequency of Observations of the Depths to Bedrock
Compiled from GPR Transects
in areas of
CuC - Culver extremely stony loam, 8 to 25 % slope

	Depth to Bedrock (in Inches)				
Transect #	0-10	10-20	20-40	40-60	>60
1	-	-	-	1	13

Table 3
Frequency of Observations of the Depths to Bedrock
Compiled from GPR Transects
in areas of
OED - Oquaga extremely stony loam, 12 to 30 % slope

	Depth to Bedrock (in Inches)				
Transect #	0-10	10-20	20-40	40-60	>60
1	1	3	4	-	-
2	1	5	4	-	-
3	1	6	1	2	-
4	2	4	4	-	-
5	1	5	4	-	-
6	-	4	1	1	-

Table 4
Frequency of Observations of the Depths to Bedrock
Compiled from GPR Transects
in areas of
SwB - Swartswood very stony loam, 0 to 12 % slope

	Depth to Bedrock (in Inches)				
Transect #	0-10	10-20	20-40	40-60	>60
1	-	-	1	1	8
2	1	-	5	3	1
3	-	-	-	1	6

Table 5
Frequency of Observations of the Depths to Bedrock
Compiled from GPR Transects
in areas of Map Units
DeD, SwD, and WuB

	Depth to Bedrock (in Inches)				
Map Unit	0-10	10-20	20-40	40-60	>60
DeD	-	-	1	1	3
DeD	1	4	-	1	-
SwD	-	-	-	5	5
WuB	-	1	1	3	1

Discussion:

EM Surveys

The enclosed contour plot (figures 1 to 6) summarizes the apparent conductivity of the upper 2.75 and 5.5 meters of the earthen materials within the study areas. The grid interval was 50 feet. The contour intervals for the computer generated plots were 2.0 mS/m (figures 1 and 2), 0.5 mS/m (figures 3 and 4), and 1.0 mS/m (figures 5 and 6).

Pennsylvania State Agricultural Progress Farm Pond:

Data from eighty-one observation points were used to construct figures 1 and 2. The location of the farm pond has been identified in each of these figures. Two anomalous patterns are evident in Figures 1 and 2. The elevated EM values near "B" reflect the presence of circular tile and pond drain lids, and pipes. Near "A" an anomalous pattern of slightly higher apparent conductivities is also evident. This pattern may be related to excess soil moisture and may identify the location of a seep. However, changes in soil type (increase clay content) may have caused this pattern. This inferences should be substantiated by ground-truth probings or a second EM survey to evaluate temporal variations in this pattern.

Pennsylvania State manure stacking sites

Data from forty-two observations sites were used to construct figures 3 and 4. A farm road is located at a slight (>80 feet) from the lower portion (x axis; 0 to 300 feet) of these figures. No apparent trends are evident or were expected as this site. The purpose of this survey was to provide baseline information which will be compared with data collected 2 to 3 years following the construction and use of the stacking site.

Amos Hoover HDP lined manure storage pond

Data from seventy-nine observations sites were used to construct figures 5 and 6. The survey covered an area which will be down-gradient of the proposed storage pond. Generally, values of apparent conductivity were higher on lower-lying slope positions and along drainageways. The purpose of this survey was to provide baseline data which will be compared with data collected 2 to 3 years following the construction and use of a manure storage pond.

FIGURE 1

EM31(H) SURVEY OF THE PENN STATE AG. PROGRESS FARM POND

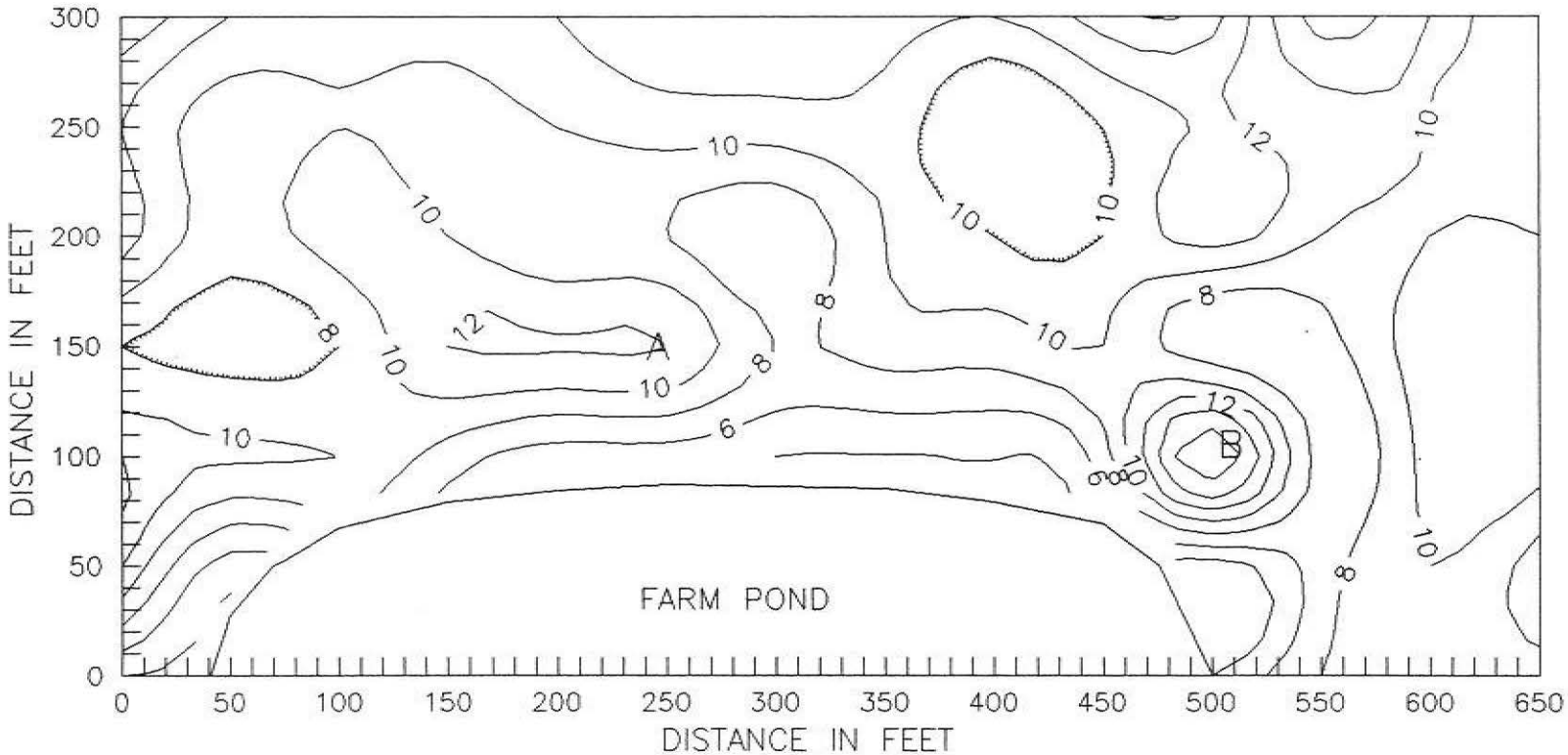

FIGURE 2

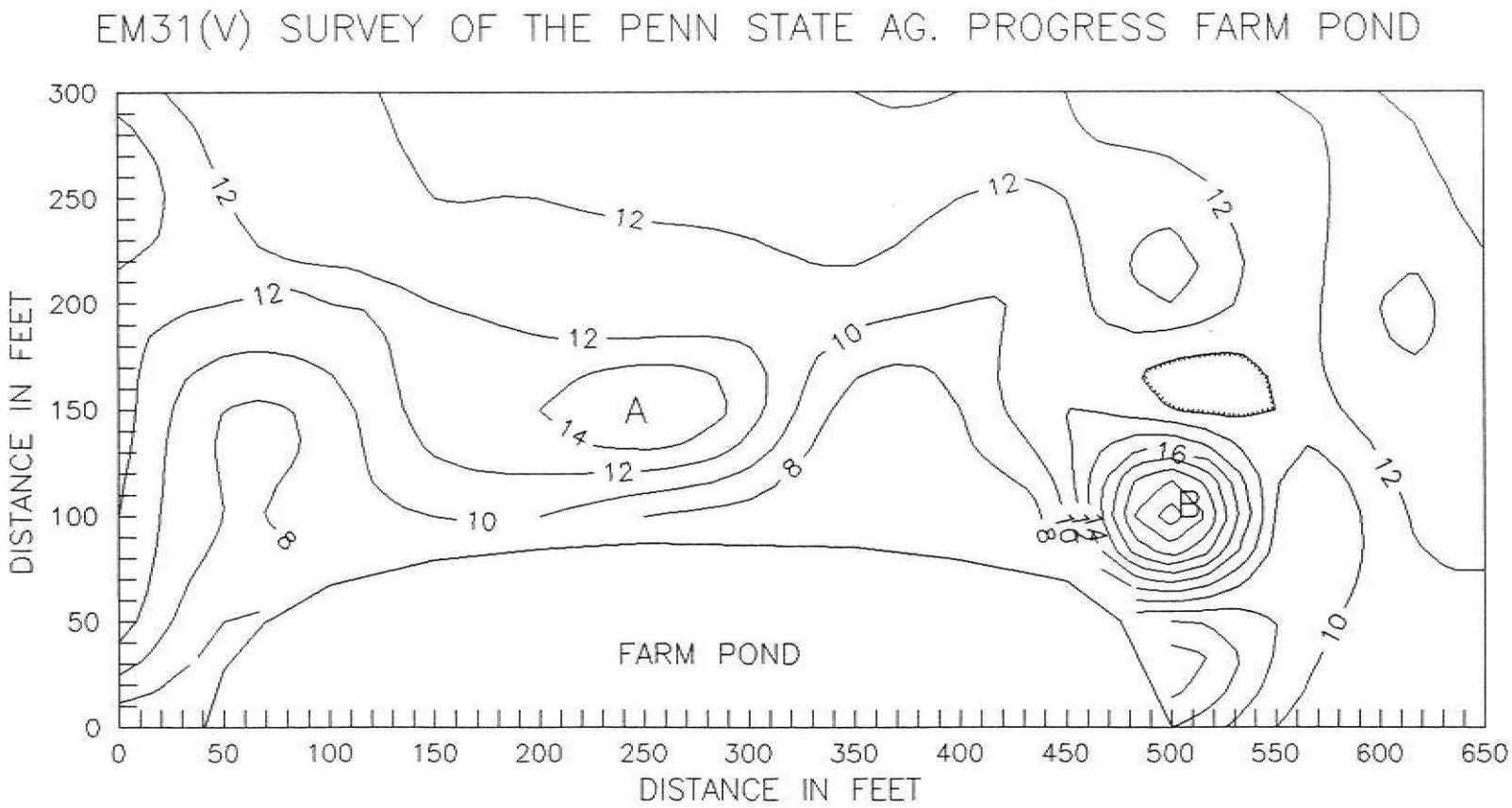
EM31(V) SURVEY OF THE PENN STATE AG. PROGRESS FARM POND
DISTANCE IN FEET
DISTANCE IN FEET
FARM POND
A
B
0
50
100
150
200
250
300
350
400
450
500
550
600
650
8
10
12
14
16

Figu-re 3

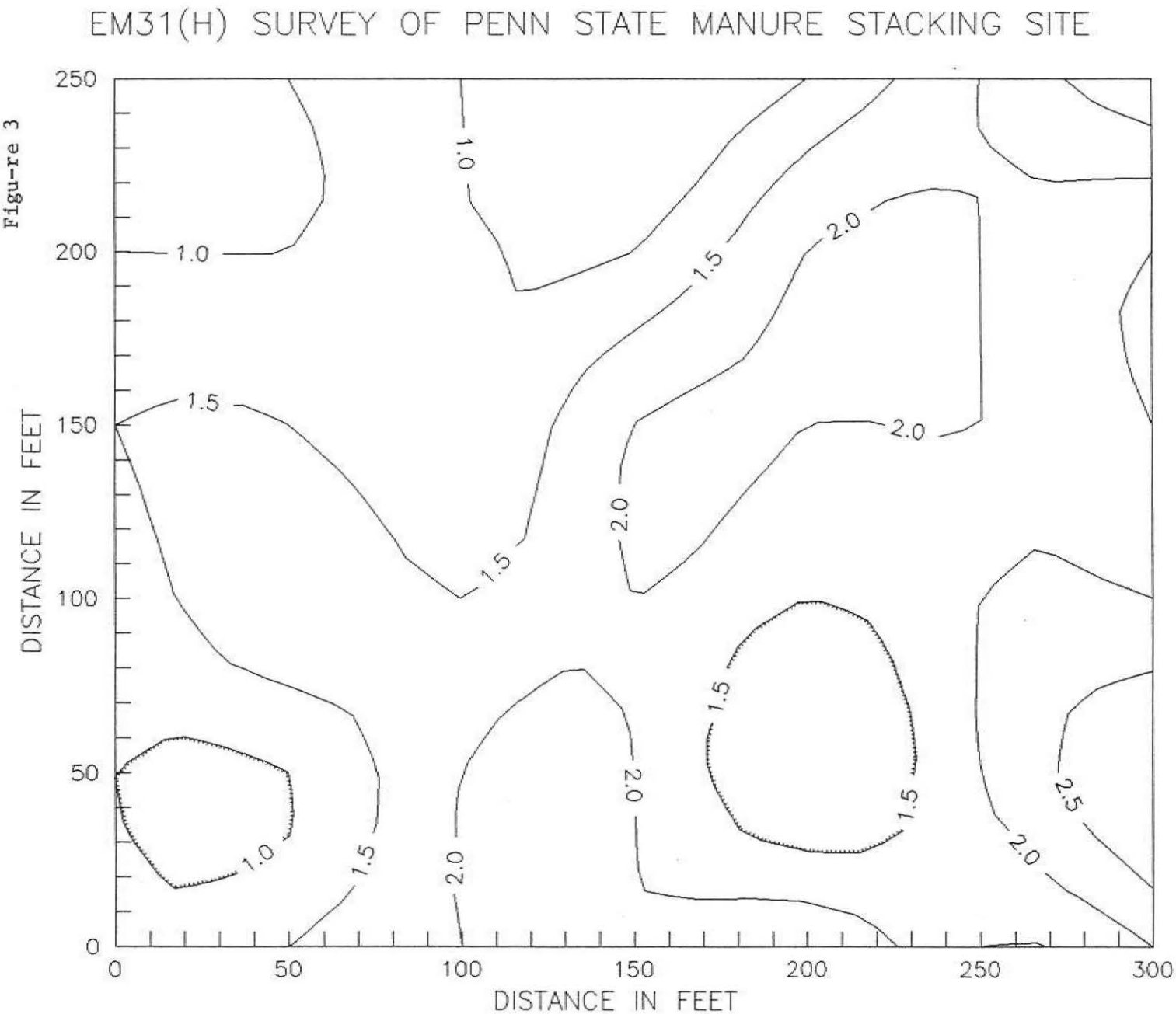
EM31(H) SURVEY OF PENN STATE MANURE STACKING SITE
DISTANCE IN FEET
DISTANCE IN FEET
0
50
100
150
200
250
300
1.0
1.5
2.0
2.5

Figure 4

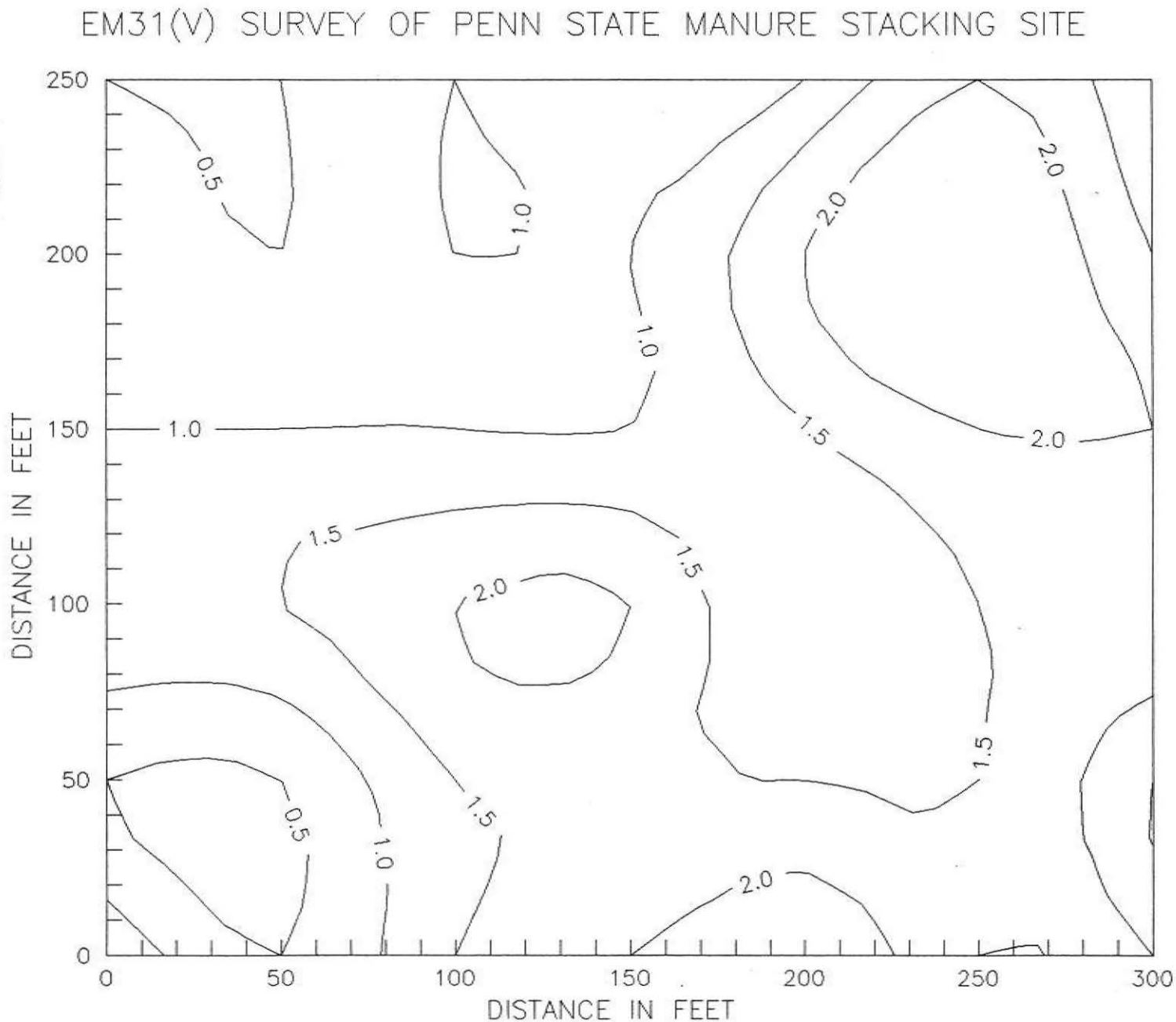
EM31(V) SURVEY OF PENN STATE MANURE STACKING SITE
DISTANCE IN FEET
DISTANCE IN FEET
0
50
100
150
200
250
300
0.5
1.0
1.5
2.0

FIGURE 2

EM31(H) SURVEY OF SITE OF HOOVER'S HPD LINED STORAGE POND

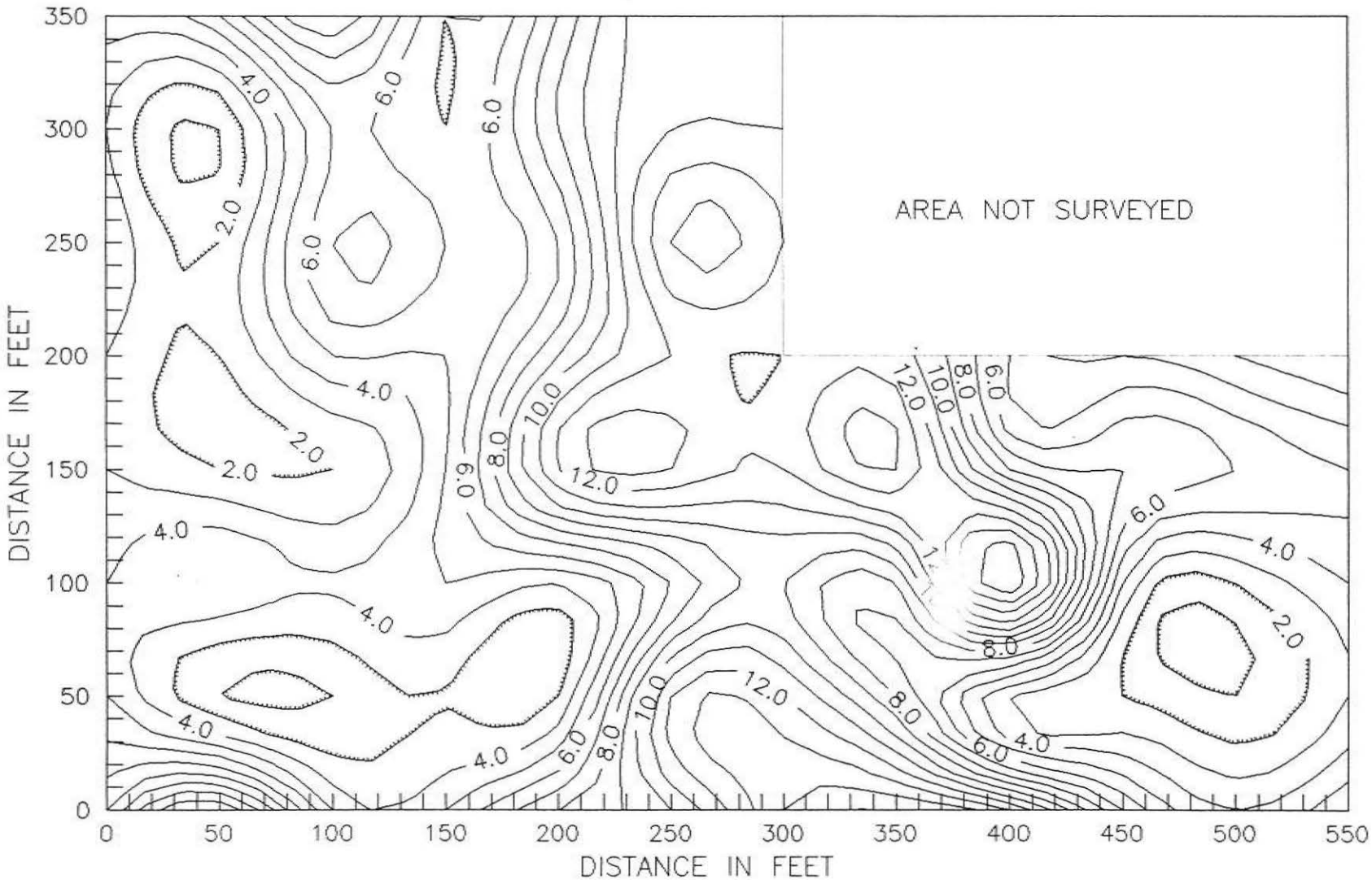

FIGURE 6

EM31(V) SURVEY OF SITE OF HOOVER'S HPD LINED STORAGE POND

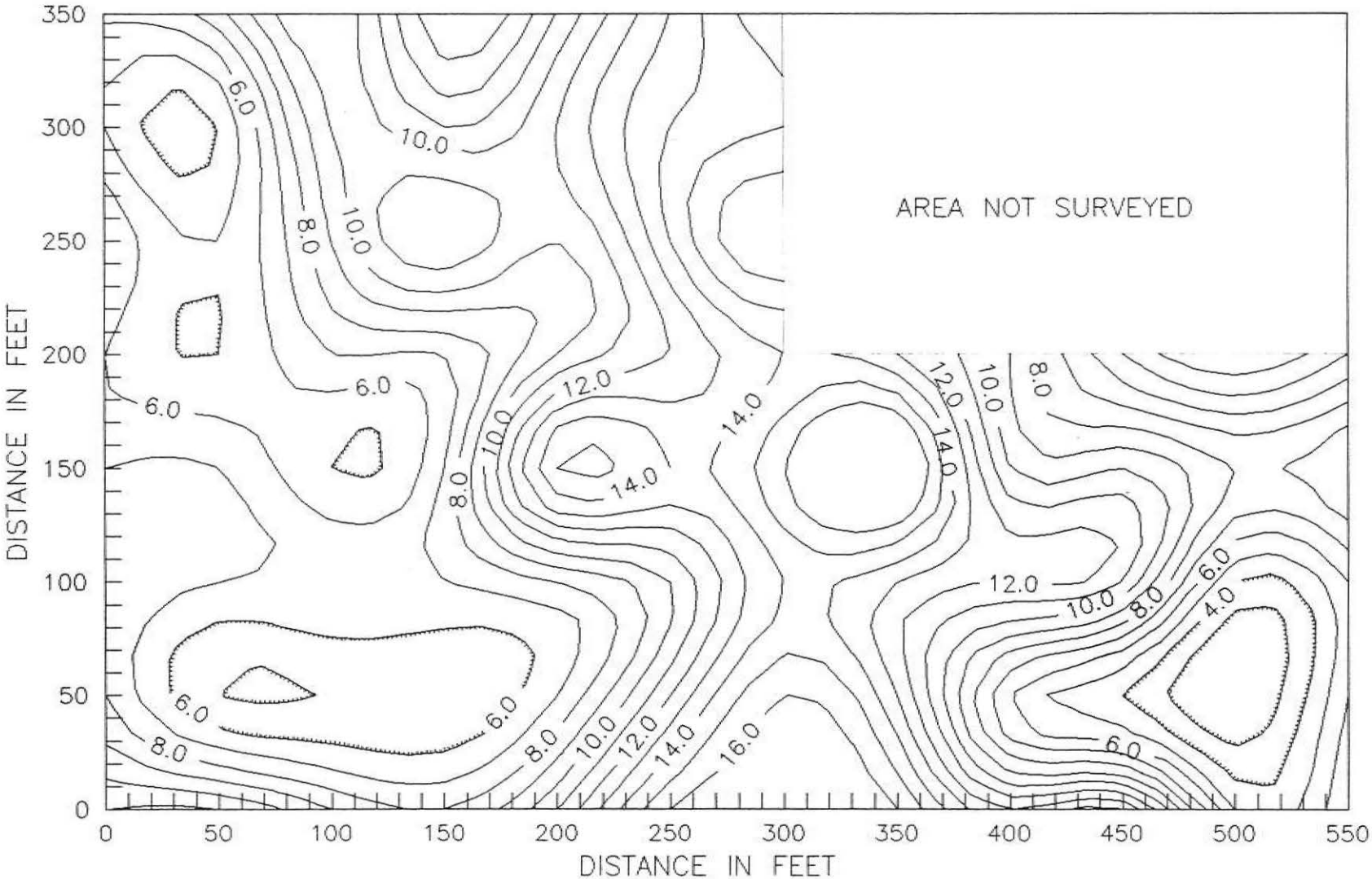

SOIL MICROBIAL ENHANCEMENT PROJECT

Figure 9

LACKAWANNA COUNTY DEMONSTRATION SITE 2
EM38 SURVEY
VERTICAL DIPOLE ORIENTATION

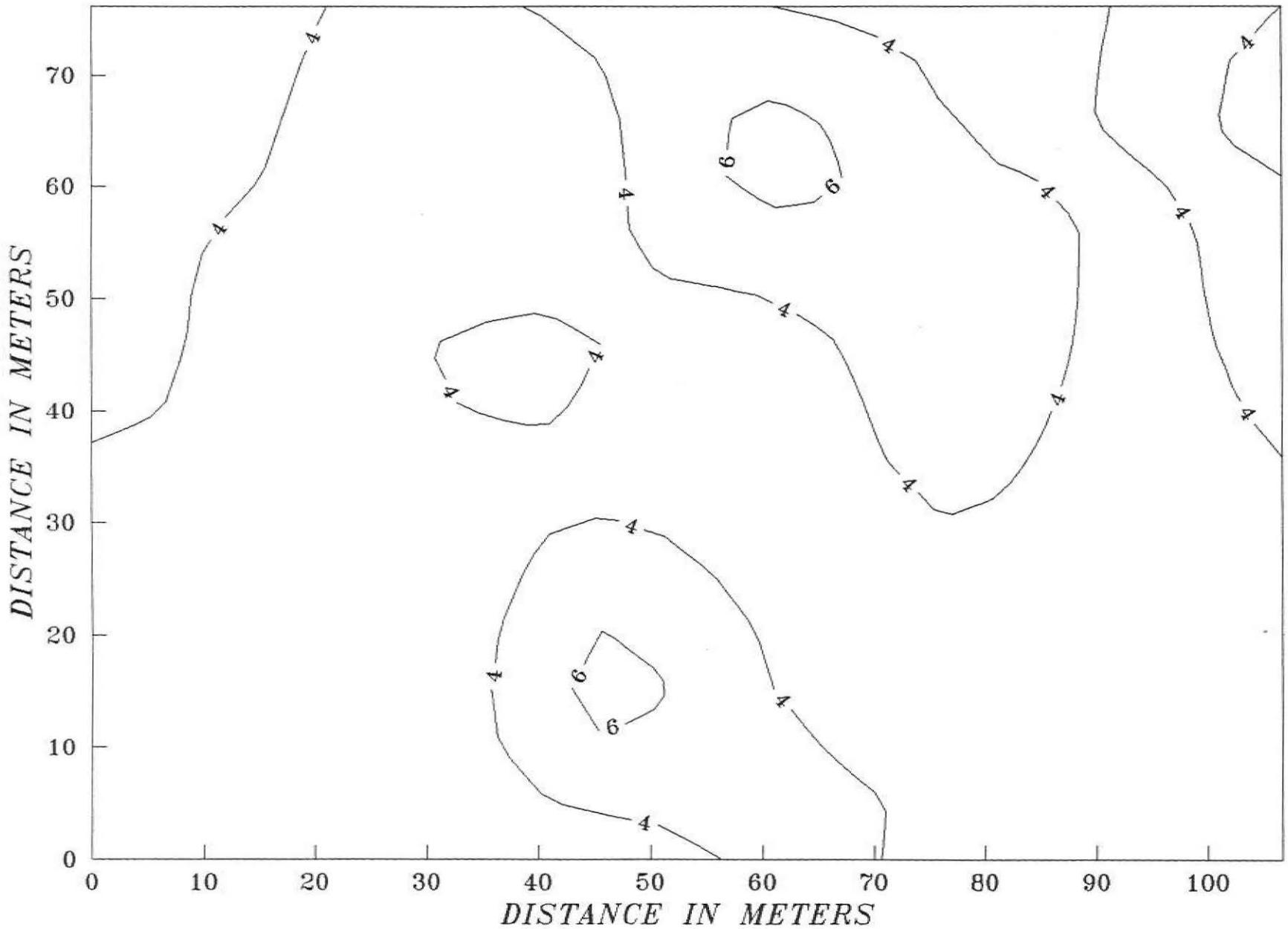

UNITED STATES DEPARTMENT OF AGRICULTURE **Northeast NTC**
SOIL CONSERVATION SERVICE **CHESTER, PA 19013**

Subject: Site Assessments with Electromagnetic Induction (EM) and Ground-penetrating Radar (GPR) Techniques: Pennsylvania April 11 to 13 1994

Date: 15 April 1994

To: Richard N. Duncan
State Conservationist
USDA-Soil Conservation Service
Harrisburg, PA

Purpose:
To conduct engineering and geologic site assessments using geophysical techniques.

Participants:
Bruce Benton, Geologist, SCS, Harrisburg, PA
Jim Doolittle, Soil Specialist, SCS, Chester, PA
Gene Krotzer, Engineering Technician, SCS, Somerset, PA
Barry Travelpiece, Engineering Technician, SCS, Bloomsburg, PA
John Zaginaylo, Area Engineer, SCS, Bloomsburg, PA

Activities:
The Gable #3 RAMP site in Westmoreland County was surveyed using both EM and GPR techniques on 12 April 1994. Heavy rains precluded the use of these techniques in Columbia and Lackawanna counties on 13 April.

Equipment:
The radar unit used in this study was the Subsurface Interface Radar (SIR) System-8 manufactured by Geophysical Survey Systems, Inc. The system was powered by a 12-volt vehicular battery. The model 3110 (120 mHz) antenna and a model 705DA transceiver were used in this study.

The electromagnetic induction meter was the EM31 manufactured by GEONICS Limited. The EM31 meter scans depths of 0-2.75 meters in the horizontal and 0-6.0 meters in the vertical dipole mode. Three-dimensional surface net diagrams of the EM data were prepared using SURFER software developed by Golden Software, Inc.

Discussion:
Gable #3 RAMP Site
The purpose of this investigation was to determine the extent of a small, abandoned mine tunnel. A 48 by 40 foot grids was established at the Gable #3 RAMP Site. The grid interval was 4 feet. Survey

flags were inserted in the ground at each grid intersection. A GPR survey was conducted along parallel east-west trending grid lines.

At each grid intersect, measurements were obtained with the EM31 meter in both the horizontal and vertical dipole orientations. Separate surveys of the site were conducted with the long axis of the meter orientated in both a north-south and an east-west direction. Measurements of conductivity are expressed in milliSiemens per meter (mS/m). Computer simulations were prepared from the EM data.

Results:

1. High rates of signal attenuation limited the observation depth of GPR. The observation depth was limited to the upper surface of the shale bedrock (about 2 feet). The radar was unable to penetrate the shale bedrock or resolve the location of the small tunnel. At this site, GPR was an inappropriate tool for this application.

2. The GPR did detect the 20 inch diameter water pipeline. This pipeline was buried at a depth of about 24 inches. The GPR survey revealed the location of a small abandon disposal pit. This pit was located on the east side of the water pipeline.

3. The location of the pipeline could be distinguished on the surface net diagrams which were simulated from the EM data (see enclosed figures). However, the buried water pipeline caused interference and masked all indications of the buried tunnel.

Recommendations:

The investigations scheduled for Columbia and Lackawanna counties have been rescheduled for 12 and 13 May 1994. The Engineering Staff of the NENTC has agreed to pick-up my travel expenses.

It is my pleasure to work with the members of your fine staff.

With kind regards,

James A. Doolittle

James A. Doolittle
Soil Specialist

cc:
B. Benton, Geologist, SCS, Harrisburg, PA
W. Bowers, State Conservation Engineer, SCS, Harrisburg, PA
J. Culver, Assistant Director, Soil Survey Division, NSSC, SCS, Lincoln, NE
C. Holzhey, Assistant Director, Soil Survey Division, NSSC, SCS, Lincoln, NE
J. Stingel, Acting Head ENG Staff, NENTC, SCS, Chester, PA

EM31 SURVEY

HORIZONTAL DIPOLE MODE
NORTH–SOUTH ORIENTATION

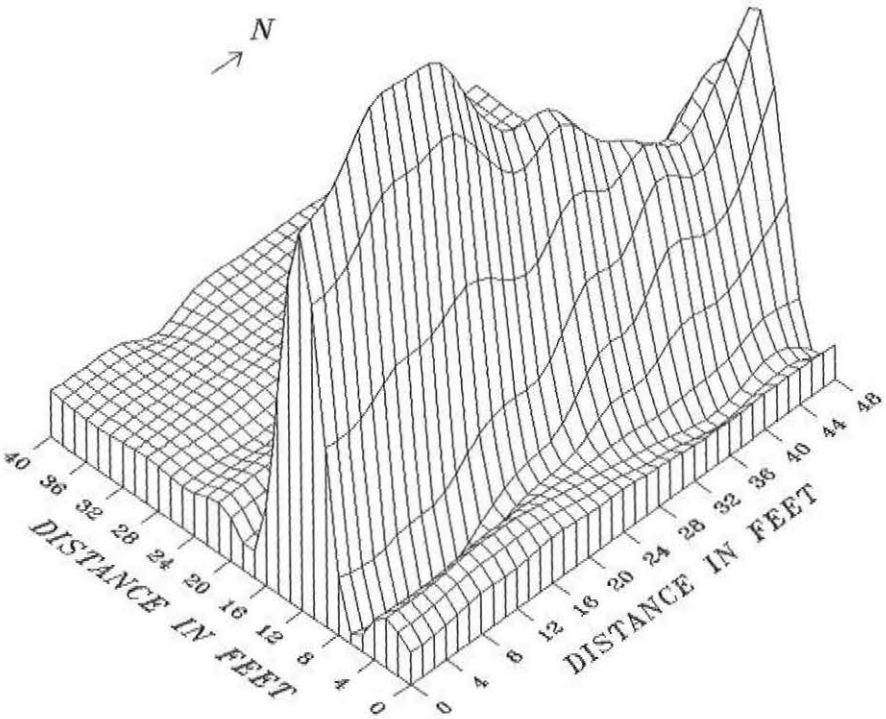

VERTICAL DIPOLE MODE
NORTH–SOUTH ORIENTATION

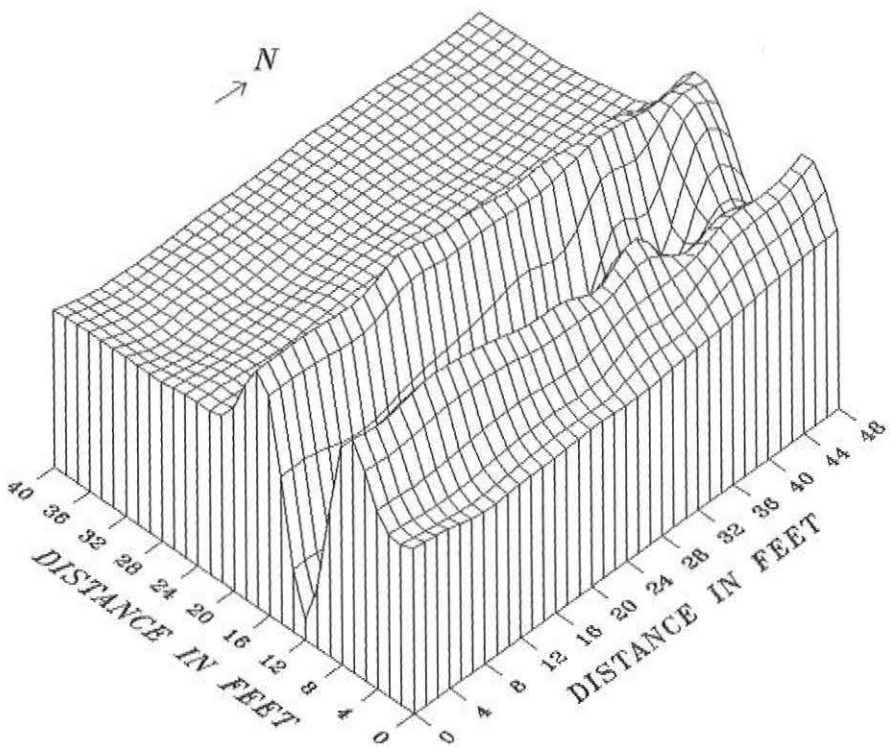

EM31 SURVEY

HORIZONTAL DIPOLE MODE
EAST–WEST ORIENTATION

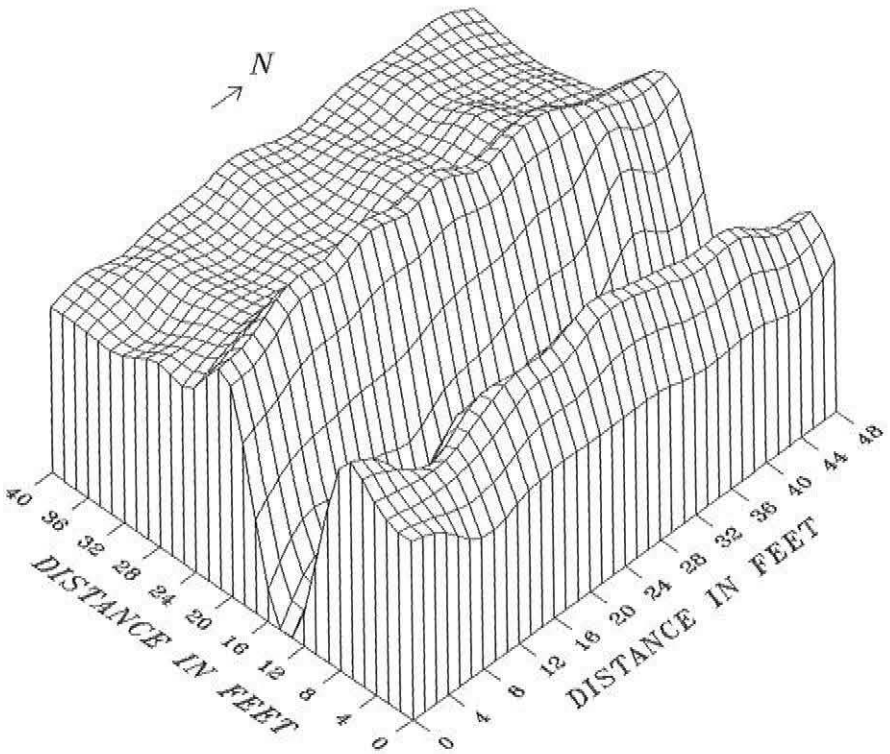

VERTICAL DIPOLE MODE
EAST–WEST ORIENTATION

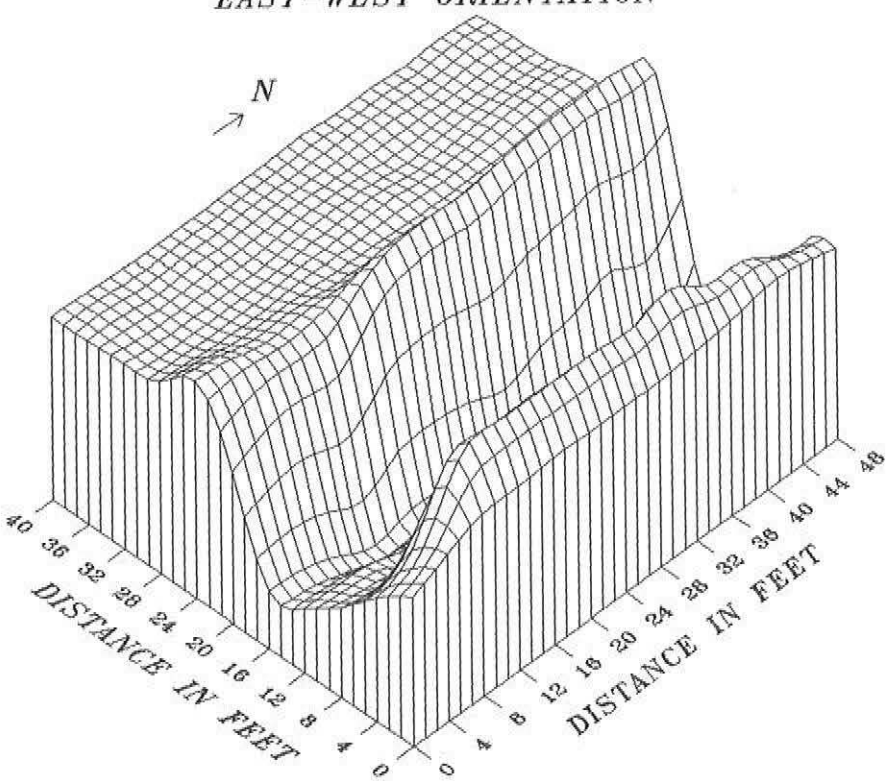

United States Department of Agriculture

Soil Conservation Service

National Soil Survey Center
Federal Building, Room 152
100 Centennial Mall North
Lincoln, NE 68508-3866

Subject: SOI - Request for Geophysical Surveys

Date: March 30, 1994

To: Richard N. Duncan
State Conservationist
SCS, Harrisburg, Pennsylvania

File Code: 430-13

We concur in your request of March 23, 1994 for Jim Doolittle to provide assistance in Pennsylvania. We appreciate the Engineering Staff at the NNTC, Chester, Pennsylvania, paying the travel expenses required to provide this technical assistance for several engineering related projects in Pennsylvania.

Please have Bruce Benton work directly with Jim in making the final arrangements to successfully complete this project.

Best regards.

C. STEVEN HOLZHEY
Assistant Director
Soil Survey Division
Mail Stop 33

cc:
L. E. Thomas, Head Engineering Staff, NNTC, SCS, Chester, PA
J. A. Doolittle, Research Soil Scientist, NNTC, SCS, Chester, PA
W. J. Bowers, State Conservation Engineer, SCS, Harrisburg, PA
B. Benton, Geologist, SCS, Harrisburg, PA
J. R. Culver, Asst. Director, SSD, NSSC, MS 33, SCS, Lincoln, NE

SCS:JRCulver:lb:3/31/94

United States Department of Agriculture

Soil Conservation Service

National Soil Survey Center
Federal Building, Room 152
100 Centennial Mall North
Lincoln, NE 68508-3866

Subject: SOI - Request for Geophysical Surveys

Date: March 30, 1994

To: Richard N. Duncan
State Conservationist
SCS, Harrisburg, Pennsylvania

File Code: 430-13

We concur in your request of March 23, 1994 for Jim Doolittle to provide assistance in Pennsylvania. We appreciate the Engineering Staff at the NNTC, Chester, Pennsylvania, paying the travel expenses required to provide this technical assistance for several engineering related projects in Pennsylvania.

Please have Bruce Benton work directly with Jim in making the final arrangements to successfully complete this project.

Best regards.

C. STEVEN HOLZHEY
Assistant Director
Soil Survey Division
Mail Stop 33

cc:
L. E. Thomas, Head Engineering Staff, NNTC, SCS, Chester, PA
J. A. Doolittle, Research Soil Scientist, NNTC, SCS, Chester, PA
W. J. Bowers, State Conservation Engineer, SCS, Harrisburg, PA
B. Benton, Geologist, SCS, Harrisburg, PA
J. R. Culver, Asst. Director, SSD, NSSC, MS 33, SCS, Lincoln, NE

SCS:JRCulver:lb:3/31/94

UNITED STATES DEPARTMENT OF AGRICULTURE — Northeast NTC
SOIL CONSERVATION SERVICE — CHESTER, PA 19013

Subject: Ground-Penetrating Radar - Soil Investigations; Clinton County, Pennsylvania November 1 and 2 1993 — **Date:** 19 November 1993

To: Richard N. Duncan
State Conservationist
USDA-Soil Conservation Service
Harrisburg, PA

Purpose:
To use ground-penetrating radar (GPR) techniques to assess soil properties.

Participants:
Ellen Dietrich, Soil Scientist, SCS, Mill Run, PA
Jim Doolittle, Soil Specialist, SCS, Chester, PA
Jake Eckenrode, Soil Scientist, SCS, State College, PA

Activities:
On the morning of 1 November, 1993, a presentation on the use of geophysical techniques in soil investigations was presented before Dr. Gary Petersen's Soils 415 class at Pennsylvania State University. During the afternoon of 1 November, an area of Sequatchie soils near Lock Haven was traversed with GPR. Bedrock investigations were conducted in upland areas of Clinton County on 2 November, 1993.

Equipment:
The ground-penetrating radar used in this study is the Subsurface Interface Radar (SIR) System-8 manufactured by Geophysical Survey Systems, Inc. Components of the SIR System-8 used in this study were the model 4800 control unit, ADTEK SR 8004H graphic recorder, power distribution unit, transmission cable (30 m), and the model 3110 (120 mHz) antenna. The system was powered by a 12-volt battery.

Discussion:
Area of Sequatchie loam near Lock Haven, Clinton County
The purpose of this survey was to evaluate the potential of using GPR techniques to chart variations in subsurface stratifications within a nearly-level area of Sequatchie loam. Sequatchie (fine-loamy, siliceous, thermic Humic Hapludults) is a very deep, well drained soil formed in alluvium. Ground-penetrating radar techniques were found to be useful in evaluating and charting variations in stratigraphic layers to depth of about 2 meters. All radar profiles were discussed in the field and given to Ellen Dietrich for further analysis.

Bedrock investigations in Clinton County
A 7.9 mile transect was conducted with GPR in upland areas of west-central Clinton County. Areas of Albrights (fine-loamy, mixed, mesic Aquic Fragiudalfs), Cookport (fine-loamy, mixed, mesic Aquic

Fragiudults), Dekalb (loamy-skeletal, mixed, mesic Typic Dystrochrepts), Gilpin (fine-loamy, mixed, mesic Typic Hapludults), Hartsells (fine-loamy, siliceous, thermic Typic Hapludults), and Leetonia (sandy-skeletal, siliceous, mesic Entic Haplorthods) soils were traversed. These moderately-deep to deep soils formed on upland areas underlain by sandstone, siltstone, and shale. The following map units were transected with GPR:

AbB - Albrights silt loam, 3 to 8 percent slopes
CoB - Cookport loam, 3 to 8 percent slopes
CpB - Cookport very stony loam, 0 to 8 percent slopes
DkB - Dekalb very stony soils, 0 to 8 percent slopes
DkC - Dekalb very stony soils, 8 to 25 percent slopes
GpB - Gilpin silt loam, 3 to 8 percent slopes
HrB - Hartsells channery loam, 3 to 8 percent slopes
LnB - Leetonia very stony sandy loam, 0 to 8 percent slopes

The GPR provided a continuous, high resolution profile of the subsurface. The observation depth was limited by the operator to 13 feet (157 inches). In some areas, the depth of observation was restricted by finer-textured soil materials or the presence of shale bedrock. Reference marks were impressed on the radar profile at 0.1 mile intervals. The depth to bedrock was estimated at each of these reference marks (80). The depth to a buried metal culvert (@ 36 inches) was used to depth scale the radar imagery.

The data appearing in Table 1 are the interpreted depths to bedrock (by soil-depth classes) along the 7.9 mile transect. If these interpretations are correct, seventy-three percent of the area traversed is very deep to bedrock. Soil maps published in 1966 depict this area as being composed of predominantly moderately-deep and deep to bedrock.

Radar interpretations and soil depths will be later confirmed by auger observations conducted by Jake Eckenrode.

TABLE 1

DEPTH TO BEDROCK BY SOIL-DEPTH CLASS

DEPTH CLASS	OBSERVATIONS	FREQUENCY
0 - 20"	0	
20 - 40"	9	11%
40 - 60"	13	16%
60 - 80"	12	15%
80 - 100"	13	16%
100 - 120"	16	20%
120 - 140"	5	6%
> 140"	12	15%

All radar profiles have been returned to Jake Eckenrode under a separate cover letter.

With kind regards,

James A. Doolittle
Soil Specialist

cc:
J. Culver, National Leader, SSQAS, NSSC, SCS, Lincoln,
A. Dornbusch, Jr., Director, MWNTC, SCS, Lincoln, NE
J. Eckenrode, Soil Scientist, Land Analysis Laboratory, Room 457, Agricultural Science and Industry Building, PSU, State College, PA 16802-1276
G. Lipscomb, State Soil Scientist, SCS, Suite 340, One Credit Union Place, Harrisburg, PA 17110-2993
C. Holzhey, Assistant Director, Soil Survey Division, NSSC, SCS, Lincoln, NE

TABLE 2

GPR Transect Data of Depths to Bedrock

Mile Marker	Depth (inches)	Mile Marker	Depth (inches)
0.0	151	4.1	46
0.1	113	4.2	35
0.2	40	4.3	107
0.3	31	4.4	33
0.4	54	4.5	>157
0.5	52	4.6	34
0.6	56	4.7	119
0.7	92	4.8	65
0.8	83	4.9	70
0.9	72	5.0	95
1.0	72	5.1	144
1.1	115	5.2	75
1.2	>157	5.3	118
1.3	>157	5.4	86
1.4	127	5.5	69
1.5	48	5.6	54
1.6	133	5.7	95
1.7	87	5.8	35
1.8	88	5.9	67
1.9	138	6.0	148
2.0	96	6.1	58
2.1	>157	6.2	>157
2.2	150	6.3	>157
2.3	123	6.4	113
2.4	145	6.5	106
2.5	86	6.6	103
2.6	78	6.7	102
2.7	96	6.8	68
2.8	102	6.9	69
2.9	117	7.0	31
3.0	138	7.1	30
3.1	82	7.2	78
3.2	111	7.3	55