UNITED STATES DEPARTMENT OF AGRICULTURE **Northeast NTC**
SOIL CONSERVATION SERVICE **CHESTER, PA 19013**

Subject: Site Assessments with Electromagnetic Induction (EM) and Ground-penetrating Radar (GPR) Techniques: Pennsylvania April 11 to 13 1994

Date: 15 April 1994

To: Richard N. Duncan
State Conservationist
USDA-Soil Conservation Service
Harrisburg, PA

Purpose:
To conduct engineering and geologic site assessments using geophysical techniques.

Participants:
Bruce Benton, Geologist, SCS, Harrisburg, PA
Jim Doolittle, Soil Specialist, SCS, Chester, PA
Gene Krotzer, Engineering Technician, SCS, Somerset, PA
Barry Travelpiece, Engineering Technician, SCS, Bloomsburg, PA
John Zaginaylo, Area Engineer, SCS, Bloomsburg, PA

Activities:
The Gable #3 RAMP site in Westmoreland County was surveyed using both EM and GPR techniques on 12 April 1994. Heavy rains precluded the use of these techniques in Columbia and Lackawanna counties on 13 April.

Equipment:
The radar unit used in this study was the Subsurface Interface Radar (SIR) System-8 manufactured by Geophysical Survey Systems, Inc. The system was powered by a 12-volt vehicular battery. The model 3110 (120 mHz) antenna and a model 705DA transceiver were used in this study.

The electromagnetic induction meter was the EM31 manufactured by GEONICS Limited. The EM31 meter scans depths of 0-2.75 meters in the horizontal and 0-6.0 meters in the vertical dipole mode. Three-dimensional surface net diagrams of the EM data were prepared using SURFER software developed by Golden Software, Inc.

Discussion:
Gable #3 RAMP Site
The purpose of this investigation was to determine the extent of a small, abandoned mine tunnel. A 48 by 40 foot grids was established at the Gable #3 RAMP Site. The grid interval was 4 feet. Survey

flags were inserted in the ground at each grid intersection. A GPR survey was conducted along parallel east-west trending grid lines.

At each grid intersect, measurements were obtained with the EM31 meter in both the horizontal and vertical dipole orientations. Separate surveys of the site were conducted with the long axis of the meter orientated in both a north-south and an east-west direction. Measurements of conductivity are expressed in milliSiemens per meter (mS/m). Computer simulations were prepared from the EM data.

Results:

1. High rates of signal attenuation limited the observation depth of GPR. The observation depth was limited to the upper surface of the shale bedrock (about 2 feet). The radar was unable to penetrate the shale bedrock or resolve the location of the small tunnel. At this site, GPR was an inappropriate tool for this application.

2. The GPR did detect the 20 inch diameter water pipeline. This pipeline was buried at a depth of about 24 inches. The GPR survey revealed the location of a small abandon disposal pit. This pit was located on the east side of the water pipeline.

3. The location of the pipeline could be distinguished on the surface net diagrams which were simulated from the EM data (see enclosed figures). However, the buried water pipeline caused interference and masked all indications of the buried tunnel.

Recommendations:

The investigations scheduled for Columbia and Lackawanna counties have been rescheduled for 12 and 13 May 1994. The Engineering Staff of the NENTC has agreed to pick-up my travel expenses.

It is my pleasure to work with the members of your fine staff.

With kind regards.

James A. Doolittle

James A. Doolittle
Soil Specialist

cc:
B. Benton, Geologist, SCS, Harrisburg, PA
W. Bowers, State Conservation Engineer, SCS, Harrisburg, PA
J. Culver, Assistant Director, Soil Survey Division, NSSC, SCS, Lincoln, NE
C. Holzhey, Assistant Director, Soil Survey Division, NSSC, SCS, Lincoln, NE
J. Stingel, Acting Head ENG Staff, NENTC, SCS, Chester, PA

EM31 SURVEY

HORIZONTAL DIPOLE MODE
NORTH-SOUTH ORIENTATION

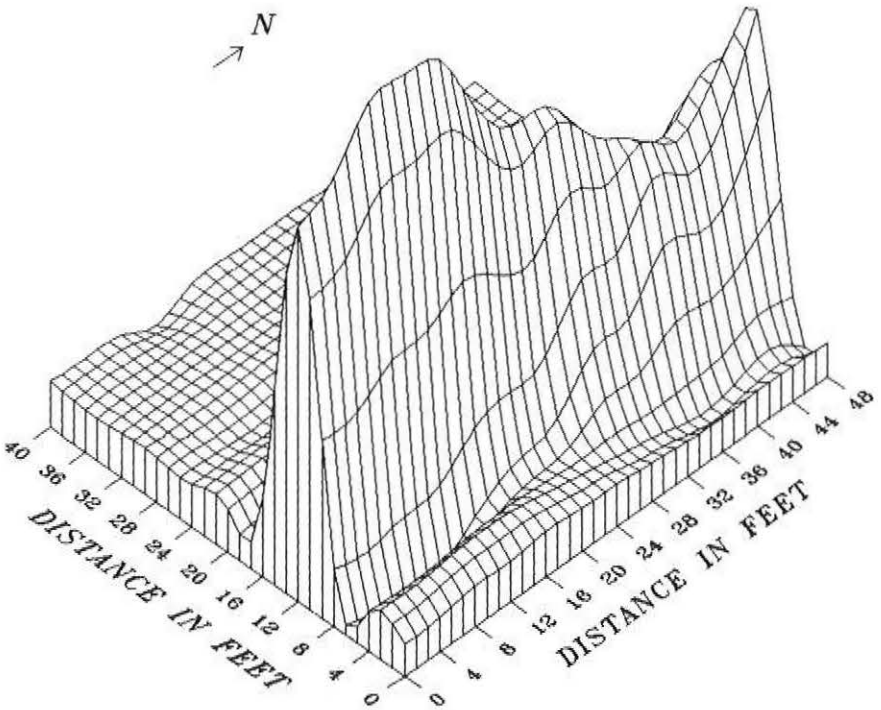

VERTICAL DIPOLE MODE
NORTH-SOUTH ORIENTATION

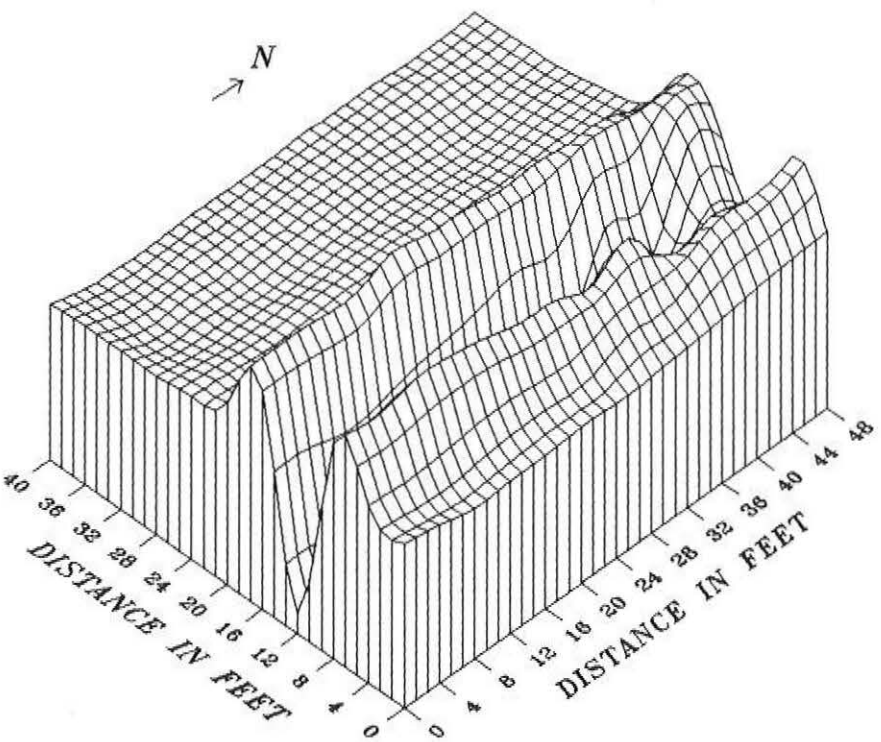

EM31 SURVEY

HORIZONTAL DIPOLE MODE
EAST-WEST ORIENTATION

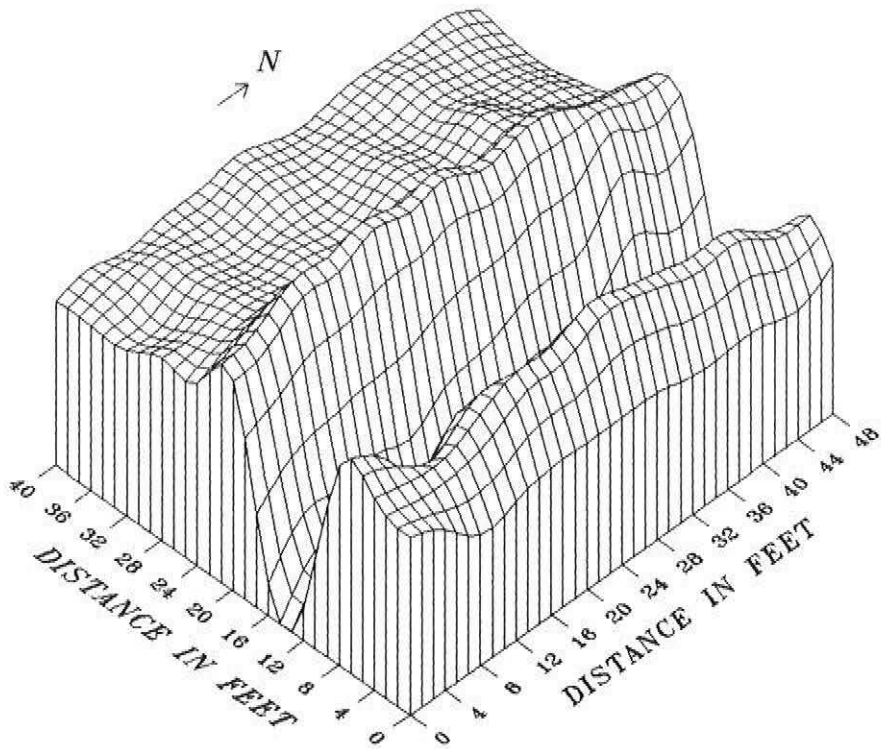
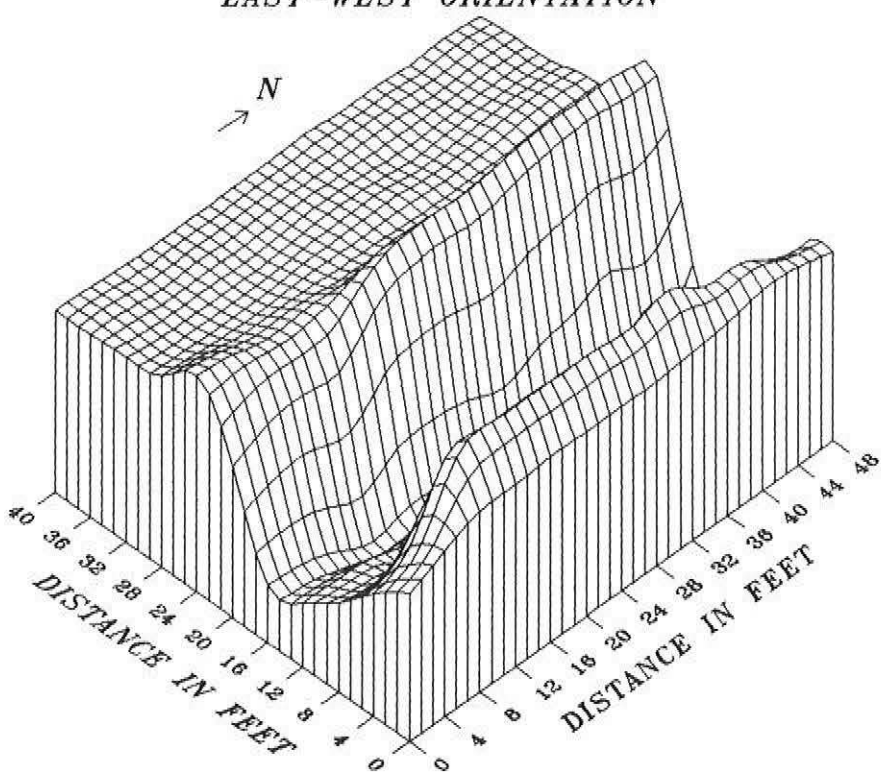
VERTICAL DIPOLE MODE
EAST-WEST ORIENTATION