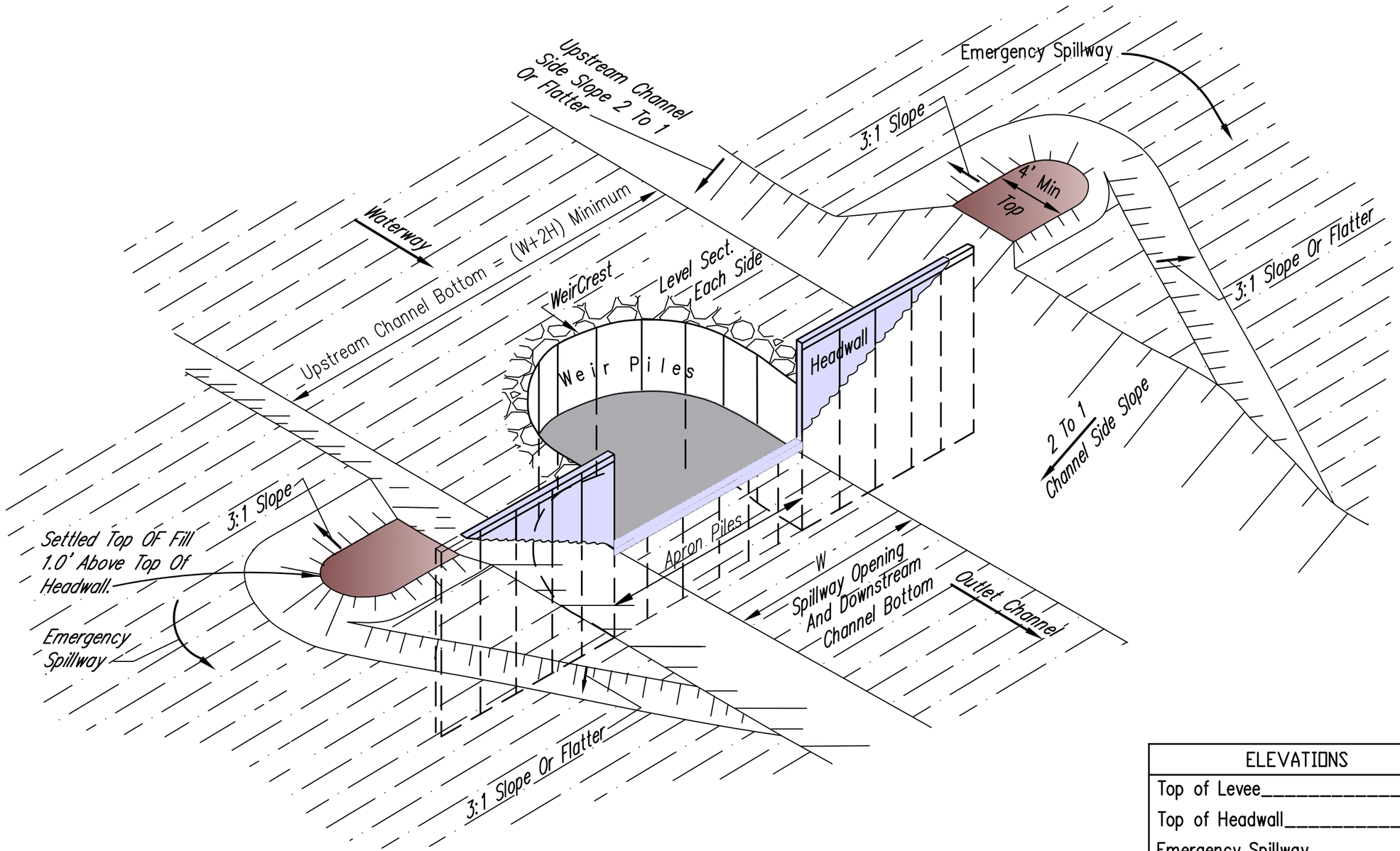

ELEVATIONS	
Top of Levee	
Top of Headwall	
Emergency Spillway	
Weir Crest	
Concrete Apron	
BENCH MARK	
Elevation	
Description	

Landowner		Location	

Designed
Drawn M. QUINONES 10/1/13
Checked
Approved

Date

SHEET PILE TOEWALL DROP SPILLWAY GENERAL LAYOUT

NRCS
Natural Resources Conservation Service
United States Department of Agriculture

File No. IL-ENG-176
Drawing No.
Page 1 of 5
Sheet of

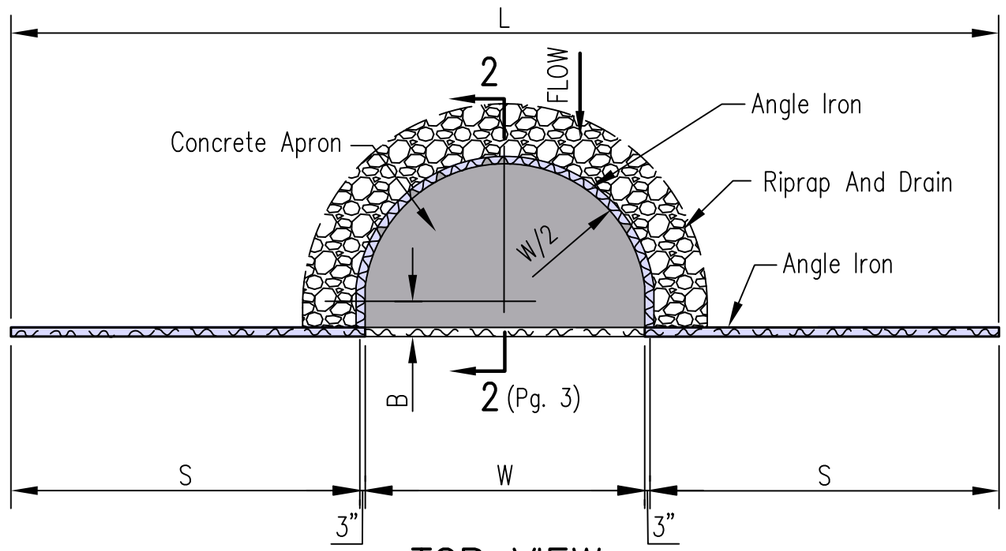

TOP VIEW

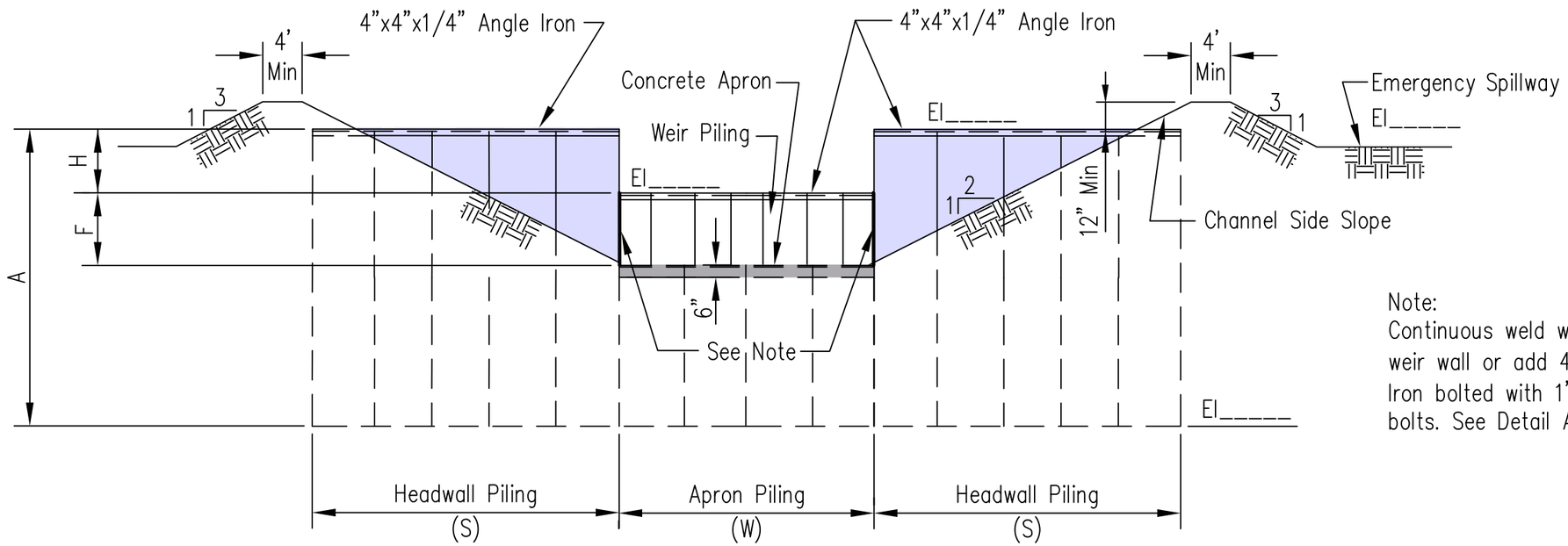

VIEW LOOKING UPSTREAM

Note:
Continuous weld where headwall meets weir wall or add 4"x 4"x 1/4" angle Iron bolted with 1"x 3" galvanized bolts. See Detail A page 3.

STRUCTURE DIMENSIONS
F_____
H_____
W_____
B_____
L_____
A_____
S_____
_____
_____

		Date
Designed		
Drawn	M. QUINONES	10/1/13
Checked		
Approved		

SHEET PILE
TOEWALL DROP SPILLWAY
GENERAL LAYOUT

NRCS
Natural Resources Conservation Service
United States Department of Agriculture

File No.
IL-ENG-176
Drawing No.
Page 2 of 5
Sheet of

Landowner		Location	

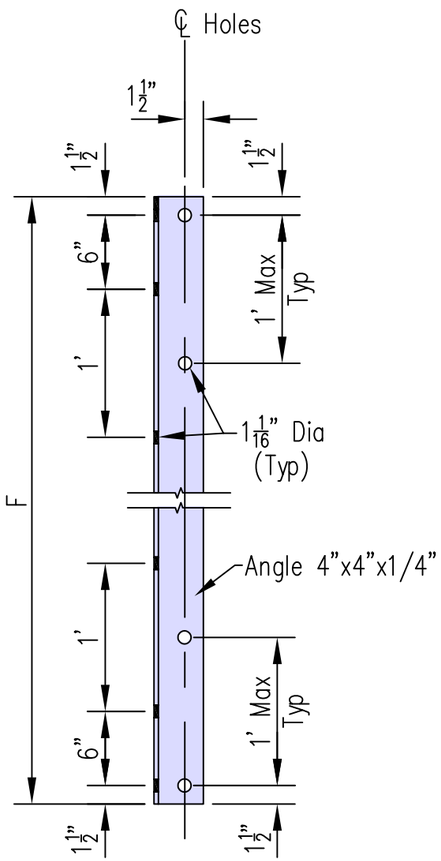

(OPTIONAL)

DETAIL A

Scale: 1" = 1'-0"

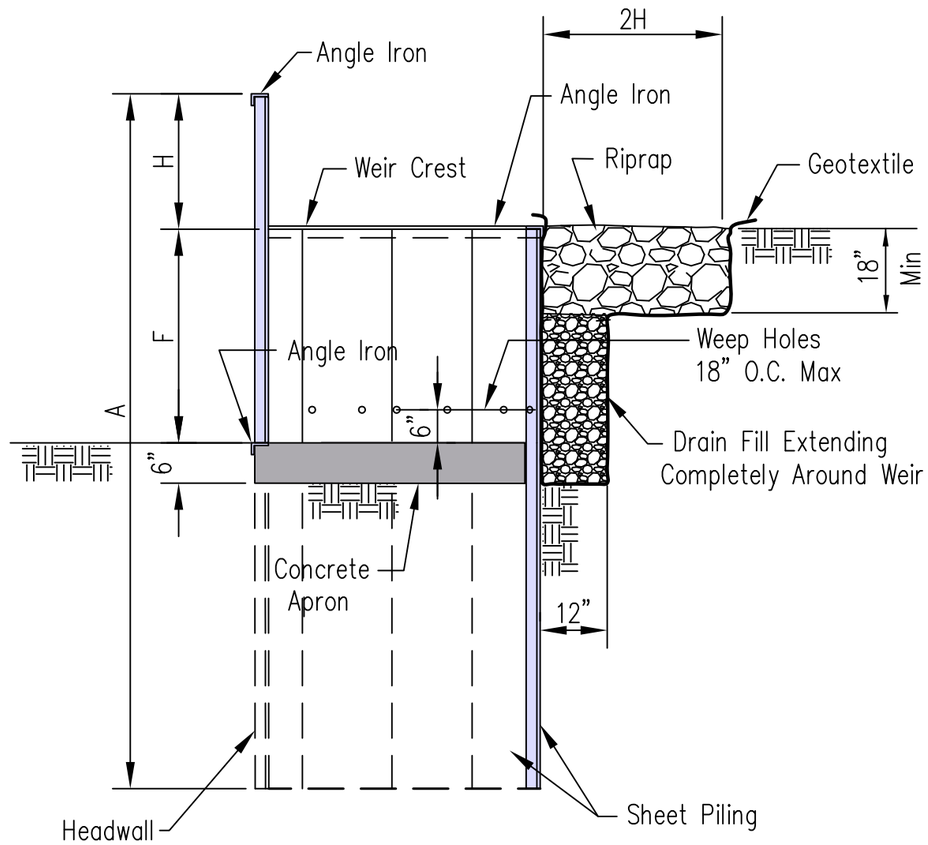

SECTION 2–2 (Page 1)

CONSTRUCTION NOTES:

1. All piling shall be driven to the bottom elevation shown on the plan. Other piling lengths are as shown in tables.
2. After driving pilings to the bottom grade shown cut the tops to a uniform elevation and cap with angle iron welded to the piling. In the weir section the curvature of the angle iron shall fit the curvature of the pilings.
3. Weep holes should be cut six inches above the apron on 18 inch centers with holes sizes between 1/2 inch and 3/4 inch. The weep holes be cut before fill is placed and the structure is back filled.
4. Earth fill shall be placed using equipment in such manner that the driven pile are not damaged or displaced.
5. Use 5 gage steel interlocking piling with minimum section modules 3.3 in^3 per ft., weight of 16.9 lbs. per lin. ft. and 18 inch wide.
6. Place rock riprap upstream of the weir for the entire weir length. The riprap will be 2 times the weir height (H) wide and 18" deep. The rock riprap will meet the requirement of IDOT Riprap Gradation No. 4, Quality Designation A. Concrete blocks with core opening up may be substituted. Width of the block will equal or exceed twice the weir height (H).
7. The outlets should be encased in granular fill and have a watertight seal at the sheet piling.
8. Concrete apron shall Be six inches thick. Use #4 rebar placed on 12 inch centers both directions.
9. Drain fill shall consist of Coarse Aggregate CA 4, 5, 6, 7, 8 or 9 as defined by IDOT Standard Specifications for Road and Bridge Construction and be Quality Designation Class A.
10. Geotextile (non-woven, needle punched) minimum criteria:
    Grab tensile strength (lb) ASTM D 4632_____202
    Elongation at failure (%) ASTM D 4632_____≥ 50
    Trapezodia tear strength (lb) ASTM D 4533_____79
    Puncture strength (lb) ASTM D 6241_____ 433
    Utraviolet light (% residual tensile strength)
    ASTM D 4355____min 50
    Apparent opening size (AOS) ASTM D 4751__
    max 0.22 mm (US sieve size 70)
    Permittivity sec^{-1} ASTM D 4491_____min 0.70
11. Any geotextile splices shall overlap a minimum of 18 inches, with upstream or upslope geotextile overlapping the abutting downslope geotextile.

Landowner		Location	

		Date
Designed		
Drawn	M. QUINONES	10/1/13
Checked		
Approved		

SHEET PILE
TOEWALL DROP SPILLWAY
GENERAL LAYOUT

NRCS
Natural Resources Conservation Service
United States Department of Agriculture

File No.
IL-ENG-176
Drawing No.
Page 3 of 5
Sheet of

Capacity CFS	(W) Width Ft.	(B) Width Ft.	Weir Length FT.	Concrete Cu.Yd.	Quantity Weir Piling 5.5 Ft. Lg.	Quantity Apron Piling 3 Ft. Lg.	Total Piling Length Ft.	Rock RR 4 Tons
184	13.4	0.0	21.0	1.4	14	9	209	9
210	13.4	1.5	24.0	1.7	16	9	220	10
237	13.4	3.0	27.0	2.1	18	9	231	11
263	13.4	4.5	30.0	2.5	20	9	242	12
250	18.1	0.0	28.5	2.4	19	12	245.5	11
276	18.1	1.5	31.5	2.9	21	12	256.5	12
302	18.1	3.0	34.5	3.4	23	12	267.5	13
289	21.0	0.0	33.0	3.2	22	14	268	12
316	21.0	1.5	36.0	3.8	24	14	279	13
342	21.0	3.0	39.0	4.4	26	14	290	14
368	21.0	4.5	42.0	5.0	28	14	301	15
395	21.0	6.0	45.0	5.6	30	14	312	16

Overfall (F) = 2.5'

Notch Depth (H) = 2.0'
Headwall Length (S) =10.5'
Sheet Pile length @ Headwall (A) = 7.5'
Headwall Piling 7 Sheets (14 Total)
18" Wide Sheet Piles

Capacity CFS	(W) Width Ft.	(B) Width Ft.	Weir Length FT.	Concrete Cu.Yd.	Quantity Weir Piling 6 Ft. Lg.	Quantity Apron Piling 3 Ft. Lg.	Total Piling Length Ft.	Rock RR 4 Tons
185	13.4	0.0	21.0	1.4	14	9	239	9
211	13.4	1.5	24.0	1.7	16	9	251	10
237	13.4	3.0	27.0	2.1	18	9	263	11
264	13.4	4.5	30.0	2.5	20	9	275	12
246	18.1	0.0	28.5	2.4	19	12	278	11
275	18.1	1.5	31.5	2.9	21	12	290	12
299	18.1	3.0	34.5	3.4	23	12	302	13
289	21.0	0.0	33.0	3.2	22	14	302	12
316	21.0	1.5	36.0	3.8	24	14	314	13
342	21.0	3.0	39.0	4.4	26	14	326	14
368	21.0	4.5	42.0	5.0	28	14	338	15
395	21.0	6.0	45.0	5.6	30	14	350	16

Overfall (F) = 3.0'

Notch Depth (H) = 2.0'
Headwall Length (S) = 12'
Sheet Pile length @ Headwall (A) = 8.0'
Headwall Piling 8 Sheets (16 Total)
18" Wide Sheet Piles

Designed ___ Date ___
Drawn M. QUINONES 10/1/13
Checked ___
Approved ___

SHEET PILE
TOEWALL DROP SPILLWAY
GENERAL LAYOUT

NRCS
Natural Resources Conservation Service
United States Department of Agriculture

File No. IL-ENG-176
Drawing No.
Page 4 of 5
Sheet of

Capacity CFS	(W) Width Ft.	(B) Setback Ft.	Weir Length FT.	Concrete Cu.Yd.	Quantity Weir Piling 7 Ft. Lg.	Quantity Apron Piling 3.5 Ft. Lg.	Total Piling Length Ft.	Rock RR 4 Tons
185	13.4	0.0	21.0	1.4	14	9	282.5	9
211	13.4	1.5	24.0	1.7	16	9	296.5	10
237	13.4	3.0	27.0	2.1	18	9	310.5	11
264	13.4	4.5	30.0	2.5	20	9	324.5	12
246	18.1	0.0	28.5	2.4	19	12	328	11
275	18.1	1.5	31.5	2.9	21	12	342	12
299	18.1	3.0	34.5	3.4	23	12	356	13
289	21.0	0.0	33.0	3.2	22	14	356	12
316	21.0	1.5	36.0	3.8	24	14	370	13
342	21.0	3.0	39.0	4.4	26	14	384	14
368	21.0	4.5	42.0	5.0	28	14	398	15
395	21.0	6.0	45.0	5.6	30	14	412	16

Overfall (F) = 3.5'

Notch Depth (H) = 2.0'
Headwall Length (S) =13.5'
Sheet Pile length @ Headwall (A) = 9.0'
Headwall Piling 9 Sheets (18 Total)
18" Wide Sheet Piles

Capacity CFS	(W) Width Ft.	(B) Setback Ft.	Weir Length FT.	Concrete Cu.Yd.	Quantity Weir Piling 8 Ft. Lg.	Quantity Apron Piling 4 Ft. Lg.	Total Piling Length Ft.	Rock RR 4 Tons
185	13.4	0.0	21.0	1.4	14	9	328	9
211	13.4	1.5	24.0	1.7	16	9	344	10
237	13.4	3.0	27.0	2.1	18	9	360	11
264	13.4	4.5	30.0	2.5	20	9	376	12
246	18.1	0.0	28.5	2.4	19	12	380	11
275	18.1	1.5	31.5	2.9	21	12	396	12
299	18.1	3.0	34.5	3.4	23	12	412	13
289	21.0	0.0	33.0	3.2	22	14	412	12
316	21.0	1.5	36.0	3.8	24	14	428	13
342	21.0	3.0	39.0	4.4	26	14	444	14
368	21.0	4.5	42.0	5.0	28	14	460	15
395	21.0	6.0	45.0	5.6	30	14	476	16

Overfall (F) = 4.0'

Notch Depth (H) = 2.0'
Headwall Length (S) = 13.5'
Sheet Pile length @ Headwall (A) = 10.0'
Headwall Piling 9 Sheets (18 Total)
18" Wide Sheet Piles

Date
Designed
Drawn M. QUINONES 10/1/13
Checked
Approved

SHEET PILE
TOEWALL DROP SPILLWAY
GENERAL LAYOUT

NRCS
Natural Resources Conservation Service
United States Department of Agriculture

File No.
IL-ENG-176
Drawing No.
Page 5 of 5
Sheet of