MATERIALS LIST

ITEM	DESCRIPTION	SIZE	LENGTH*	QUANTITY 3 BINS	QUANTITY 4 BINS	QUANTITY 5 BINS	QUANTITY 6 BINS
1	Sill Plate (treated)	2x6	18'–8 1/2"	4	5	6	7
2	Front Post (treated)	4x6	10'–0"	4	5	6	7
3	Rear Post (treated)	6x6	5'–2"	3	4	5	6
4	Wall Stud (treated)	2x6	4–11"	4	5	6	7
5	Wall Stud	2x6	5'–4"	4	5	6	7
6	Wall Stud	2x6	5'–9"	4	5	6	7
7	Wall Stud	2x6	6'–3"	4	5	6	7
8	Wall Stud	2x6	6'–8"	4	5	6	7
9	Wall Stud	2x6	7'–1"	4	5	6	7
10	Wall Stud	2x6	7'–7"	4	5	6	7
11	Wall Stud	2x6	8'–0"	4	5	6	7
12	Wall Stud	2x6	8'–5"	4	5	6	7
13	Wall Stud	2x6	8'–11"	4	5	6	7
14	Wall Stud	2x6	9'–4"	4	5	6	7
15	Wall Stud	2x6	9'–9"	4	5	6	7
16	Wall Stud	2x6	10'–3"	4	5	6	7
17	Wall Stud	2x6	10'–8"	4	5	6	7
18	Girt (treated)	2x6	18'–8 1/2"	2	2	2	2
19	Girt	2x6	18'–8 1/2"	6	6	6	6
20	Girt	2x6	16'–4"	2	2	2	2
21	Girt	2x6	12'–4"	2	2	2	2
22	Girt	2x6	8'–4"	2	2	2	2
23	Girt	2x6	4'–4"	2	2	2	2
24	Girt	2x6	19'–11"	2	2	2	2
25	Wall Header	2x12	19'–9"	6	8	10	12
26	Wall Panel Blocking	2x6	~1'–1 1/2"	8	10	12	14
27	Wall Panel Blocking	2x6	1'–2 1/2"	60	75	90	105
28	Wall Panel Blocking	2x6	~1'–0 1/2"	4	5	6	7
29	Front Header (treated)	4x14	16'–0"	2	2	2	2
30	Front Header (treated)	4x14	15'–11 1/2"	1	2	3	4
31	Purlin Joist (FS)	3.125x12	19'–3"	3	4	5	6
32	Purlin	2x12	7'–5 5/8"	60	80	100	120
33	Purlin Block	2x8	1'–10 1/2"	54	72	90	108
34	Knee Brace (treated)	2x6	6'–0"	8	8	8	8
35	Oriented Strand Board (OSB)–(Endwall Inside Face)	4'x8' sheet	7/16" thick	268 SQ.FT.	268 SQ.FT.	268 SQ.FT.	268 SQ.FT.
36	(OSB) Sheathing (Interior Walls–both faces)	4'x8' sheet	7/16" thick	536 SQ.FT.	804 SQ.FT.	1072 SQ.FT.	1340 SQ.FT.
37	OSB Sheathing (roof)	4'x8' sht	15/32"thick	976 SQ.FT.	1293 SQ.FT.	1610 SQ.FT.	1927 SQ.FT.
38	Corrugated Steel Sheets	1/2"corr.	26 Gauge	1244 SQ.FT.	1561 SQ.FT.	1878 SQ.FT.	2195 SQ.FT.
39	6x6 Post Base–Simpson PB66 or USP WE66			3	4	5	6
40	4x14 Post Cap(End)–Simpson ECCQ46SDS2.5HDG or equal			2	2	2	2
41	4x14 Post Cap–Simpson CCQ46SDS2.5HDG or equal			2	3	4	5
42	2x12 Purlin Hanger–Simpson HUS210 or equal			108	144	180	216
43	2x12 Purlin Hanger–Simpson LUC210Z or equal			12	16	20	24
44	3–1/8x10–9/16 Purlin Joist Hanger–Simpson HUC212–2HDG or equal			6	8	10	12
45	Sill, Plate Anchor Bolts w/ Nuts & Washers	1/2" Dia. hex head	8 1/2"	56	70	84	98
46	Concrete for Composter			57.8 C.Y.	75.4 C.Y.	92.9 C.Y.	110.5 C.Y.
47	Concrete for Front Apron			14.4 C.Y.	19.0 C.Y.	23.6 C.Y.	28.2 C.Y.
48	Granular Base			31.5 C.Y.	41.8 C.Y.	52.1 C.Y.	62.4 C.Y.
49	Steel Reinforcement for Composter			3,477 lbs	4,538 lbs	5,599 lbs	6,660 lbs
50	Steel Reinforcement for Concrete Front Apron Option 1			513 lbs.	690 lbs.	867 lbs.	1043 lbs.
51	Steel Reinforcement for Front Apron Option 2			249 lbs.	334 lbs.	420 lbs.	505 lbs.

*Maximum lengths of miter–cut lumber are shown rounded up to the nearest inch. Exact dimensions are to be determined in the field.
Materials list does not include nails or screws. Specific fasteners for each connection, including timber connections, special hangers, post bases and other connectors, OSB sheathing and metal sheeting, are shown on the drawings and details for each connection. Contractor is responsible for estimating total fastener quantities.

DESCRIPTION	QUANTITY 3 BINS	QUANTITY 4 BINS	QUANTITY 5 BINS	QUANTITY 6 BINS
Horizontal Roof Dim Area	926 sqft	1227 sqft	1528 sqft	1829 sqft

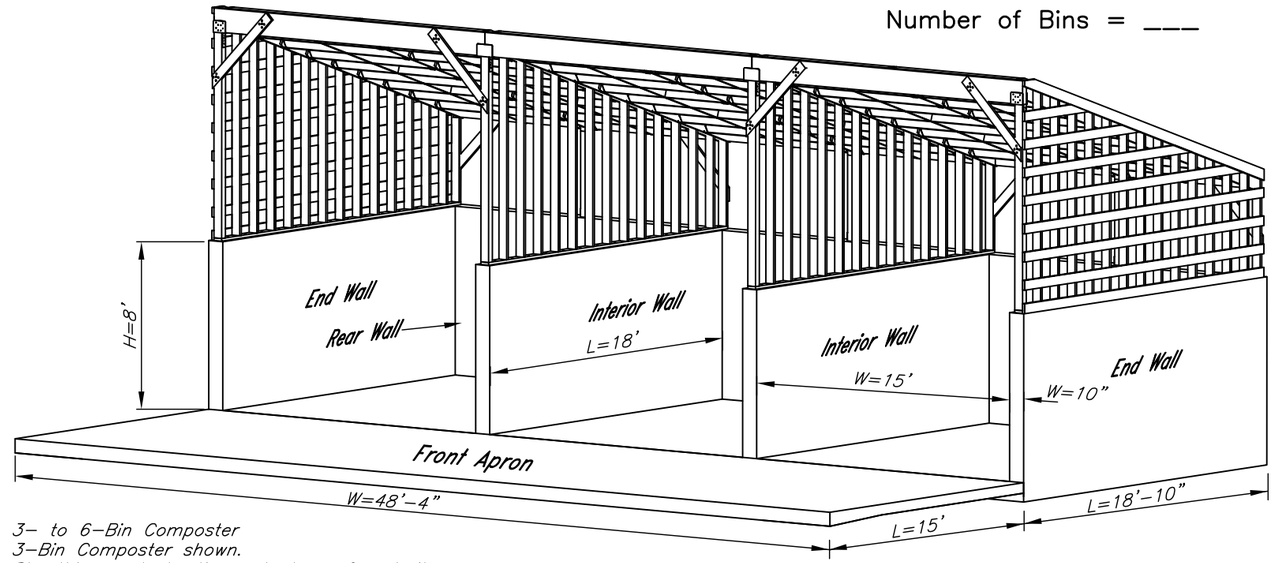

3– to 6–Bin Composter
3–Bin Composter shown.
Sheathing and sheeting not shown for clarity.

ISOMETRIC VIEW

GENERAL

Primary references used in design include ASCE7–10, Minimum Design loads for Buildings and other Structures; National Design Specification (NDS) for Wood Construction, 2005; ACI318–08; ACI330R–08; IA SUDAS Design Manual 2011 Ed., Practice Standard 313, Waste Storage Facility 2007

This composting facility was designed based on a 105 mph wind load and a 60 psf. snow load. An importance factor of 0.8, fully exposed terrain factor of 0.9, and unheated structure factor of 1.2 were applied to the snow load resulting in a design load of 36.4 psf.

Concrete Wall Loading (Equivalent Fluid Pressure):
Inside Load: 0 to 8 ft., 60 psf/ft Outside Load: 0 to 5 ft., 85 psf/ft + 2 ft. surcharge

LUMBER

Lumber sizes shown above are nominal. Actual sizes to be provided shall be the dressed size as follows.

2x6 – 1 1/2" x 5 1/2"	4x6 – 3 1/2" x 5 1/2"
2x8 – 1 1/2" x 7 1/4"	4x14 – 3 1/2" x 13 1/4"
2x12 – 1 1/2" x 11 1/4"	6x6 – 5 1/2" x 5 1/2"

All lumber, except Rear Posts, Purlin Joists, and Front Headers will be Spruce–Pine–Fir (SPF), No. 2 or better. Rear Posts shall be Southern Pine or better. Purlin Joists and Front Headers shall be LVL–PRL Commercial 2900 or better. Lumber shall be kiln dried to 19% moisture content or drier. Posts, rear studs in walls, sill plates, knee braces, bottom girts, front header and rear purlins shall be CCA or ACQ treated.

HARDWARE

All fasteners, nails, screws, bolts, washers, and nuts shall be either heavily galvanized (G185) after fabrication, Stainless Steel or an equivalent suitable for contact with ACQ wood. Nails marked RS are ring shanked.

Contractor may request to replace nails with screws based on supplying documentation clearly showing the screws meet or exceed the pertinent properties of the nails specified.

Commercially manufactured structural connectors shall be installed using the number and type of fasteners specified by the manufacturer.

Fasteners for metal sheeting (roof & sidewalls) shall be #10–12TP1 metal–to–wood screws with bonded sealing washers, Panel–Tite, or equal.

INTERIOR WALL SHEATHING

Panel grade will be APA rated Exp 1 sheathing Oriented Strand Board (OSB) or structurally equivalent. Span Rating will be 24/0. Bond classification is exterior. Thickness is 7/16". Horizontal orientation.

ENDWALL INTERIOR FACE SHEATHING

Same as interior wall sheathing.

ROOF SHEATHING

Roof panel grade will be APA rated Exp1 sheathing OSB or structurally equivalent. Span Rating will be 32/16. Bond classification is exterior. Thickness is 15/32". Strength axis is long panel direction.

METAL SHEETING

Roofing and end–wall siding shall be 26 gauge 1/2" corrugated galvanized steel sheeting.

CONCRETE

The concrete shall conform to Iowa NRCS Construction Specification 31, Concrete.
All concrete shall have a minimum 28 day Compressive strength of 4000 pounds per square inch (psi).

STEEL REINFORCING BARS

Steel shall have yield strength fy = 60,000 psi.

GRANULAR BASE

Material should be dense–graded with less than 15% by weight passing the No. 200 sieve; max. stone size 1" to 1.5". Suggested gradations are IDOT No. 11 (Granular Surface & Shoulder) or No. 14 (Modified Subbase).

Date
Designed
Drawn J.Gibbs/C.Osborn 7/13
Checked
Approved

LARGE ANIMAL MORTALITY COMPOSTING FACILITY
15'W x 18'L x 8'H BINS WITH TIMBER ROOF
3 to 6 Bins – For 105 mph wind and 60 psf ground snow load regions

NRCS
Natural Resources Conservation Service
United States Department of Agriculture

File No.
Drawing No.
Sheet of

STANDARD DWG. NO. IA–1645

DATE Jul 2013 | PAGE 1 OF 8

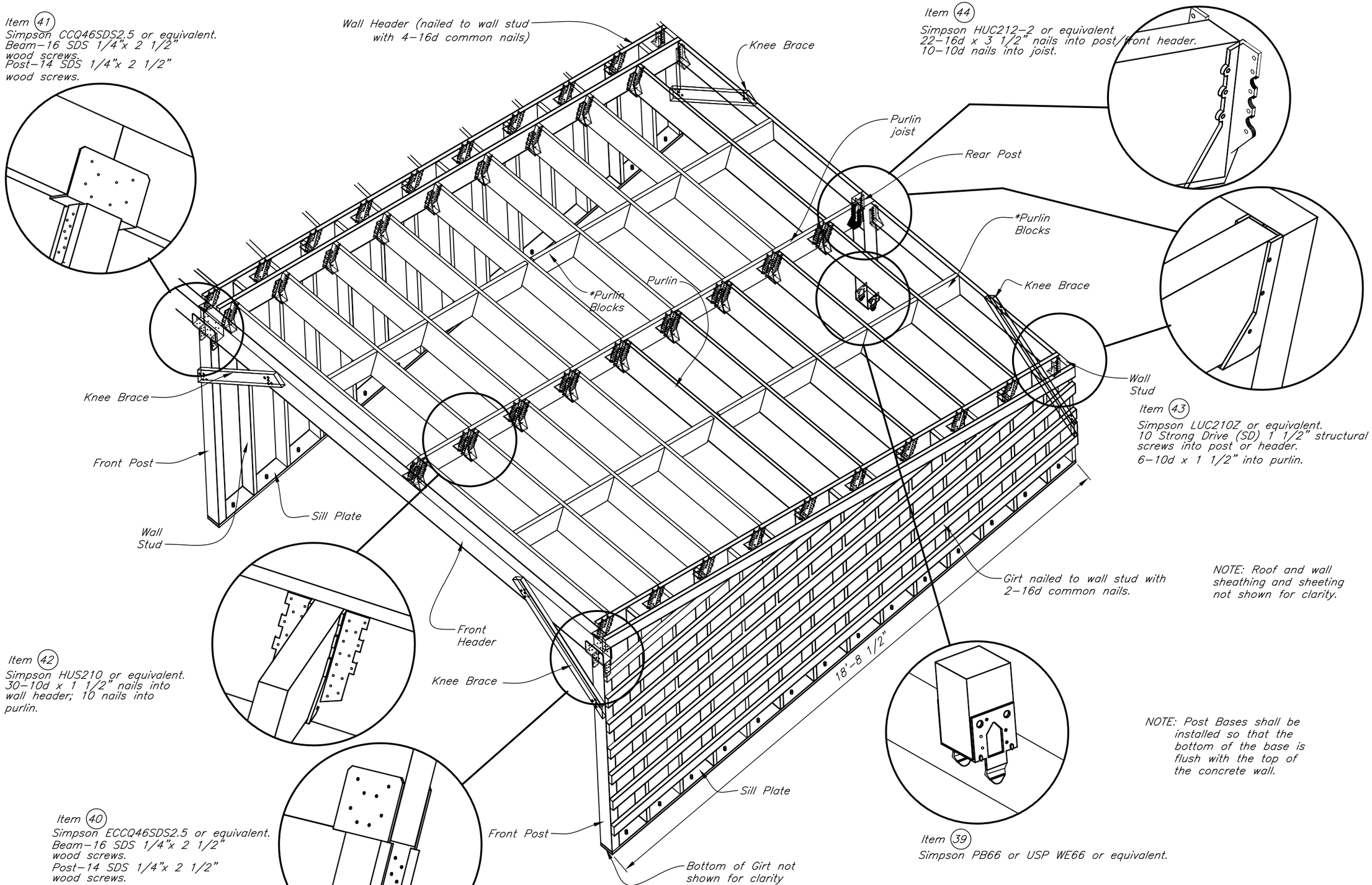

NOTE: Roof and wall sheathing and sheeting not shown for clarity.

NOTE: Post Bases shall be installed so that the bottom of the base is flush with the top of the concrete wall.

ISOMETRIC VIEW OF TIMBER DESIGN & FASTENER DETAILS N.T.S.

*Purlin Blocks: 6–10d common nails/block; stagger blocks for ease of installation. Place blocks flush with bottom of Purlin for added stability.

STANDARD DWG. NO. IA–1645

DATE Jul 2013 | PAGE 2 OF 8

Date

Designed

Drawn J.Gibbs/C.Osborn 7/13

Checked

Approved

LARGE ANIMAL MORTALITY COMPOSTING FACILITY
15'W x 18'L x 8'H BINS WITH TIMBER ROOF
ISOMETRIC & FASTENERS DETAILS

NRCS
Natural Resources Conservation Service
United States Department of Agriculture

File No.

Drawing No.

Sheet of

CONSTRUCTION NOTES

All operations shall be carried out in a safe and skillful manner, meeting all applicable federal and Iowa Occupational Safety and Health Administration (OSHA) requirements and local regulations.

Construction operations shall be carried out in such a manner that erosion, air and water pollution are minimized, in accordance with the requirements of Construction Specification IA–5, Pollution Control.

The foundation for the structure and the apron slab shall be excavated as needed to allow for the placement of the 6–in gravel layer. The resulting subgrade shall be uniformly firm, smooth, level and well–compacted. Subgrade materials shall be blended or unsuitable materials removed and replaced as required to obtain uniform materials, with no zones of soil that may cause differential settlement. The subgrade shall be inspected prior to placement of the granular base.

The granular base layer shall be compacted by at least two passes of a vibrating plate compactor. The resulting granular surface shall be uniformly firm, smooth, moist, well–compacted and able to support construction traffic without rutting. Granular base and reinforcing steel placement shall be inspected prior to concrete placement.

Structure floor and apron slab reinforcing steel shall be held in place by chairs or blocks meeting the requirements of Construction Specification IA–31, Concrete.

The front apron shall be constructed using one of 3 options: 1) continuously reinforced concrete slab with no contraction joints; 2) jointed reinforced concrete slab with reinforcing continuing through contraction joints; or 3) fiber–reinforced concrete slab with contraction joints. See page 8 for concrete slab option details.

Anchor bolts shall be cast into the concrete walls. The tops of the walls need to be level and the Anchor bolts spaced as shown on the drawings for the lumber dimensions to fit as shown.

All nails shall be hand–driven. Provide min. 1" distance to edges and ends of boards.

Metal sheeting shall be installed following the manufacturers recommendations.

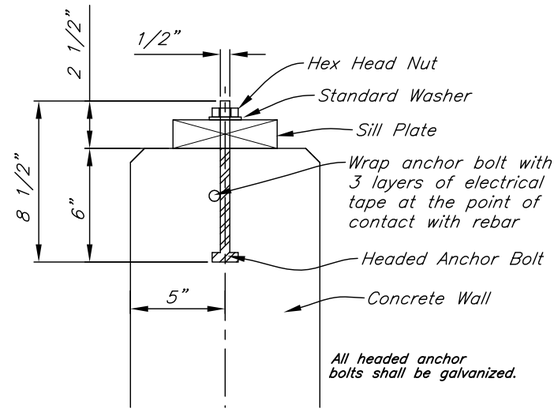

ANCHOR BOLT DETAIL

1/8" = 1"

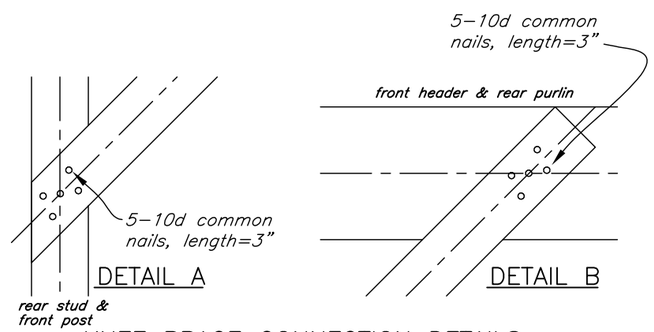

KNEE BRACE CONNECTION DETAILS

3/4"=1'–0"

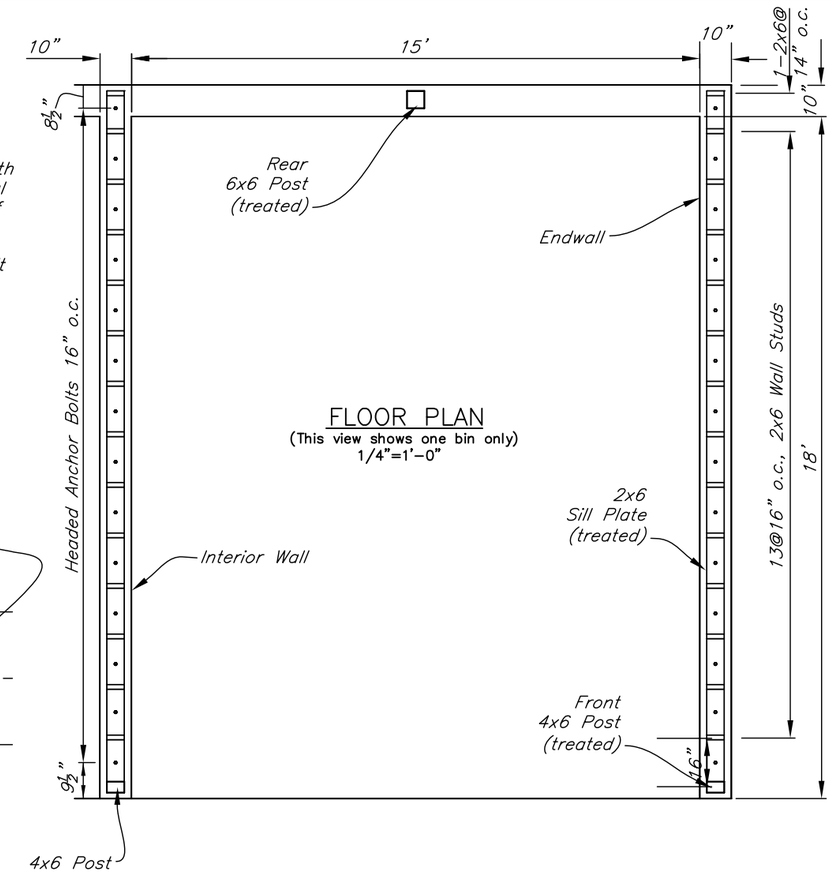

FLOOR PLAN

(This view shows one bin only)

1/4"=1'–0"

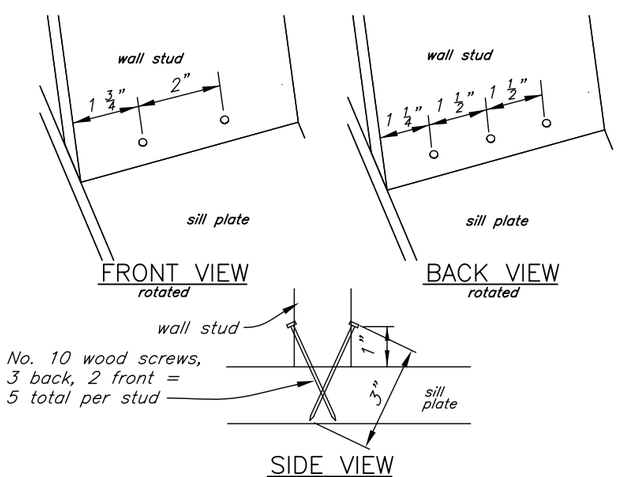

FRONT VIEW
rotated

BACK VIEW
rotated

SIDE VIEW

DETAIL C: TOE–NAIL CONNECTION

NOT TO SCALE

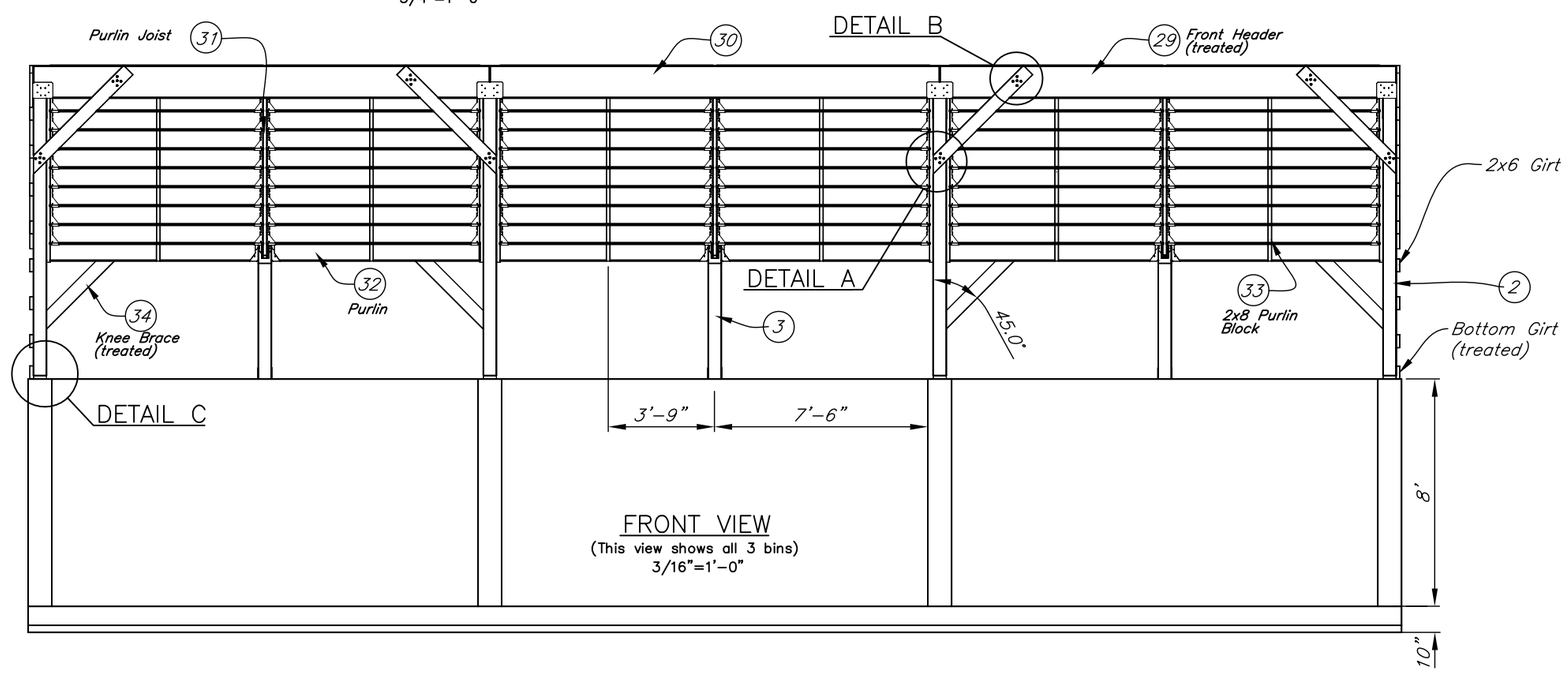

FRONT VIEW

(This view shows all 3 bins)

3/16"=1'–0"

STANDARD DWG. NO. IA–1645

DATE Jul 2013 | PAGE 3 OF 8

Designed
Drawn J.Gibbs 12/11
Checked
Approved

LARGE ANIMAL MORTALITY COMPOSTING FACILITY
15'W x 18'L x 8'H BINS WITH TIMBER ROOF

GENERAL LAYOUT
Sheet 1 of 2

NRCS
Natural Resources Conservation Service
United States Department of Agriculture

File No.

Drawing No.

Sheet of

ROOF & EXTERIOR WALLS

Item (37), roof sheathing = $\frac{15}{32}$" OSB. Install panels with vertical orientation and stagger panel joints as shown. Provide $\frac{1}{8}$" spacing at all panel end and edge joints (may be checked using a standard 10d box nail).

All cut edges of wall and roof sheathing shall be sealed with waterproof sealant.

Fasten OSB roof sheathing to purlins using 8d common nails, 2-$\frac{1}{2}$" long, smooth, ring-or-screw-shank at 6" o.c. for support ends and edges, and 12" o.c. for the panel field. Head of fasteners shall be flush with surface of OSB.

Item (38) = $\frac{1}{2}$" 26-gauge galvanized corrugated steel sheeting for roofing and siding.

Fasten steel sheeting for roof through OSB underlayment to underlying timber roof structure using #10-12 TPI metal-to-wood screws with bonded sealing washers (Panel-Tite, or equal), spaced at max. 15" o.c. along purlins. Screws shall be of sufficient length to provide 1" min. embedment. Fasten steel sheeting for sidewalls to girts using #10-12TPI metal-to-wood screws at max. 24" o.c., providing min. 1" embedment into girts.

Sheet metal roofing and siding installation, accessories and appurtenances shall be in accordance with all manufacturer's recommendations, including flashings, sidelaps, sheet metal stitch screws, and joint caulking.

A detailed fastening schedule shall be provided by the Contractor which meets all requirements of the metal sheeting manufacturer.

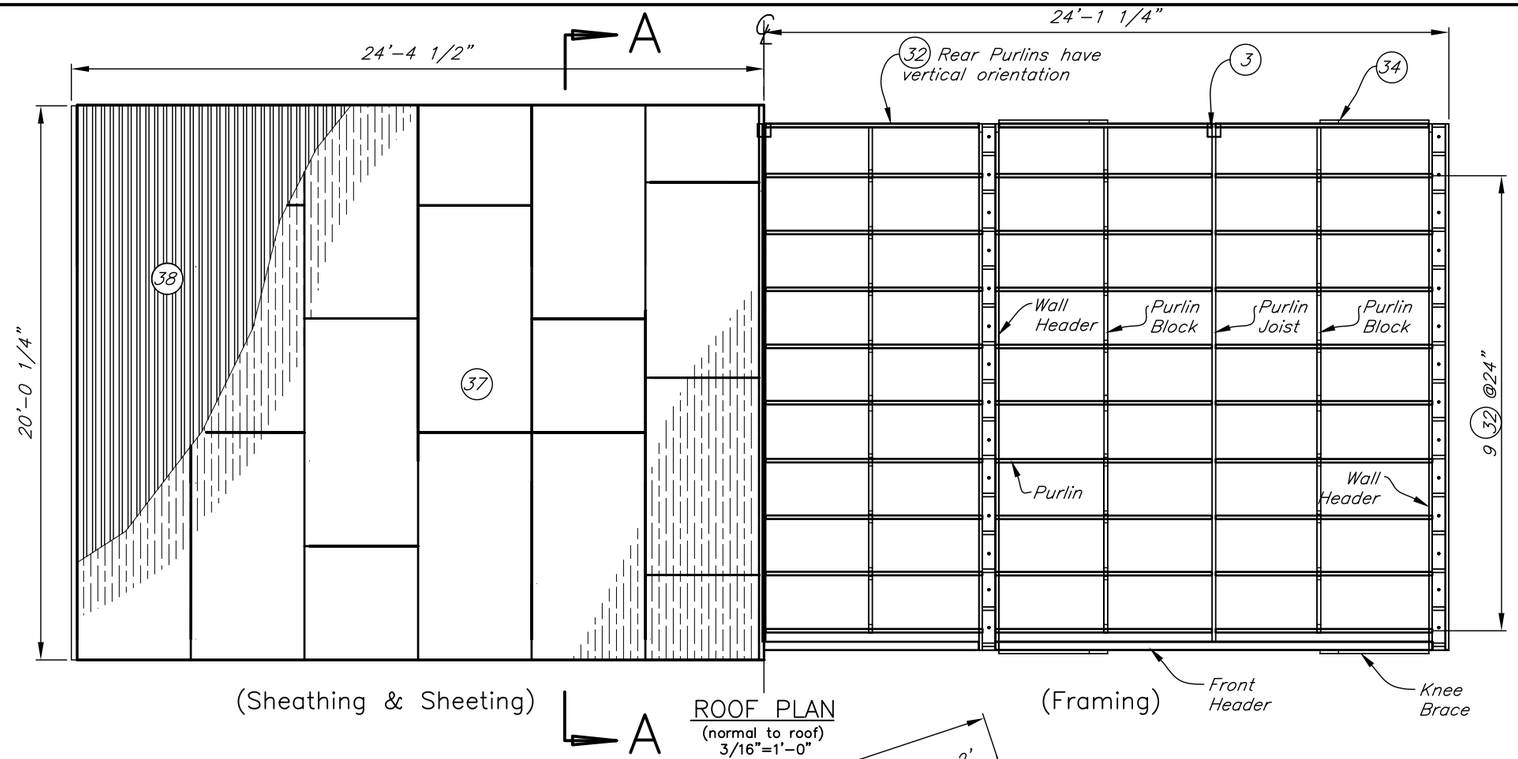

ROOF PLAN
(normal to roof)
3/16"=1'-0"

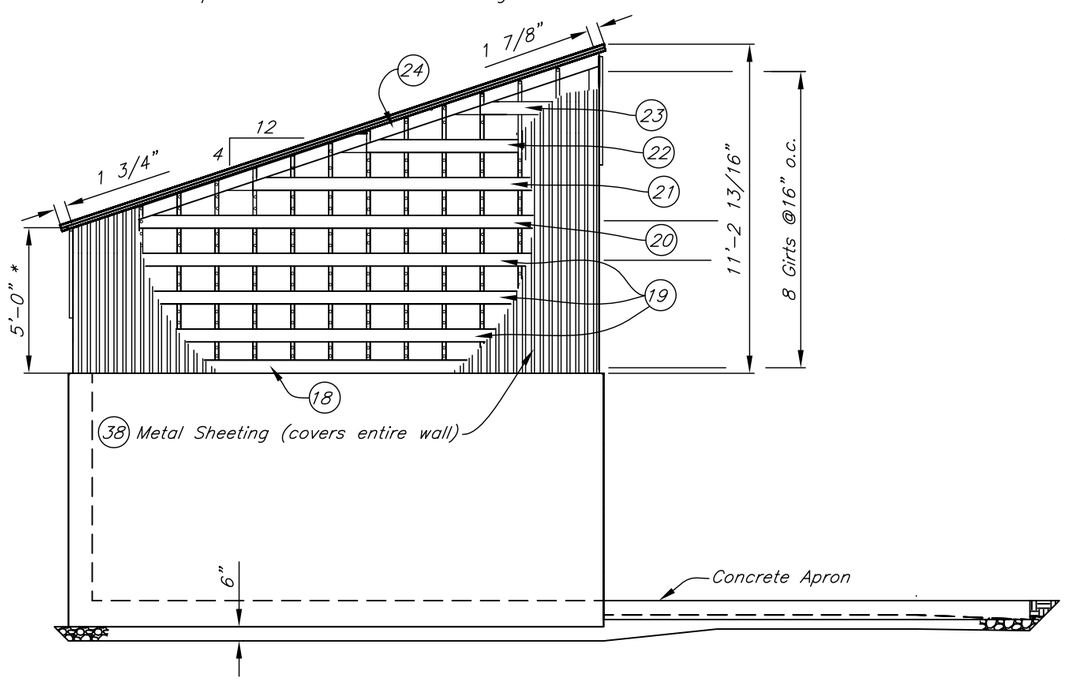

* = stud length at outer edge

EXTERIOR WALL FRAMING
END ELEVATION
3/16"=1'-0"

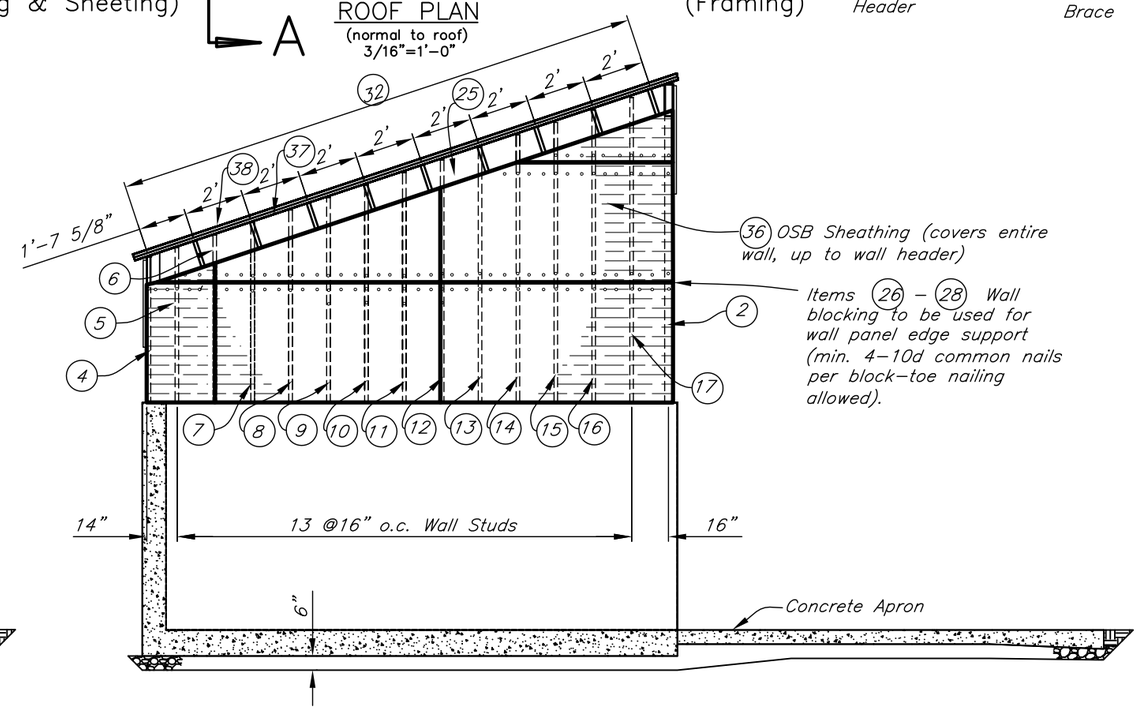

INTERIOR WALL FRAMING
SECTION A-A
3/16"=1'-0"

STANDARD DWG. NO. IA-1645

DATE Jul 2013 | PAGE 4 OF 8

Designed
Drawn J.Gibbs
Checked
Approved
Date 7/12

LARGE ANIMAL MORTALITY COMPOSTING FACILITY
15'W x 18'L x 8'H BINS WITH TIMBER ROOF
GENERAL LAYOUT
Sheet 2 OF 2

NRCS
Natural Resources Conservation Service
United States Department of Agriculture

File No.

Drawing No.

Sheet of

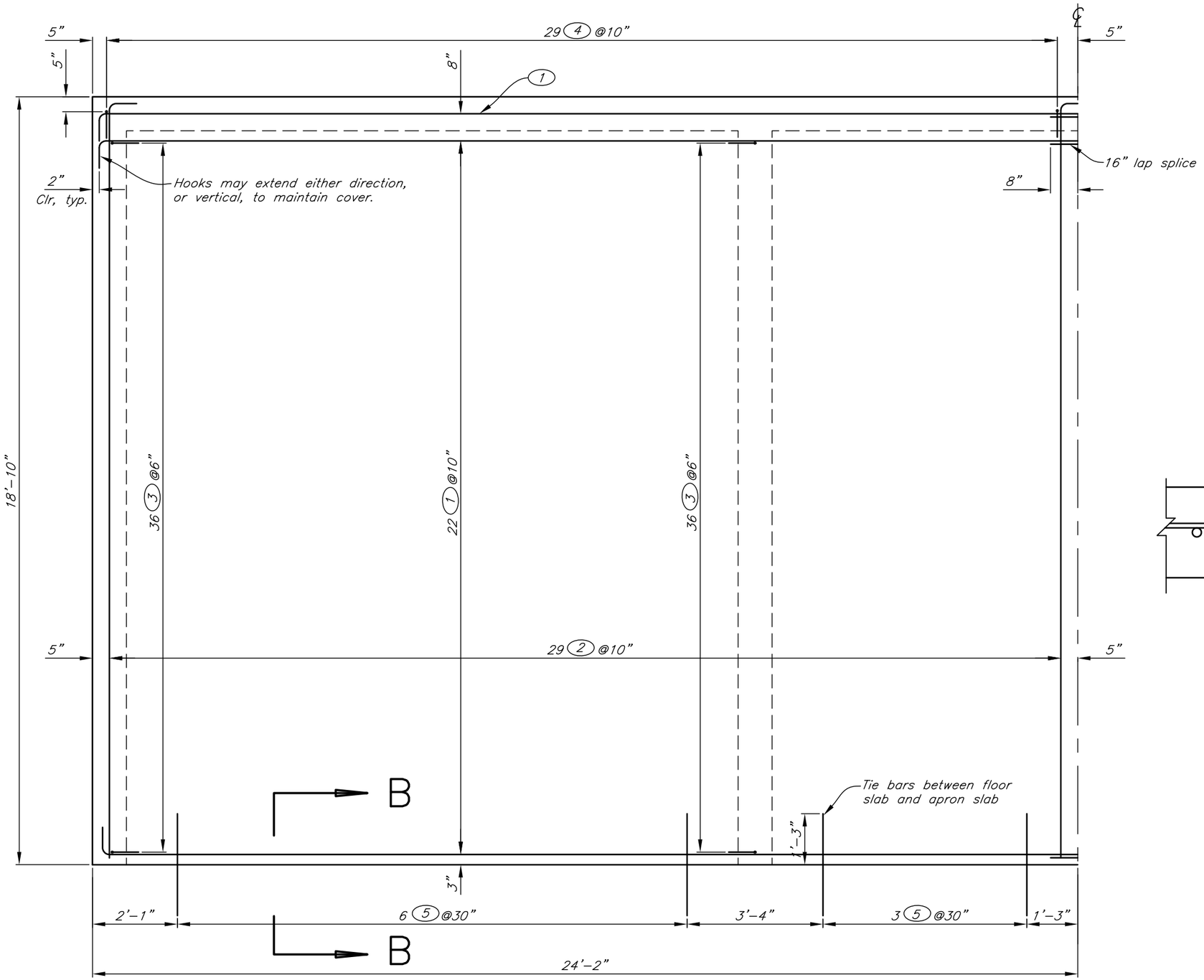

Longitudinal steel centered in 10" floor thickness

Symmetrical about centerline

PLAN VIEW – FLOOR SLAB

3/8"=1'-0"

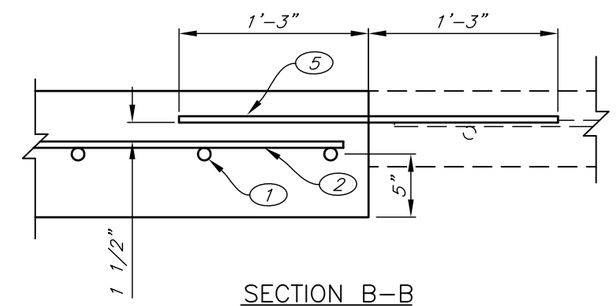

SECTION B–B

TIE BAR DETAIL

1"=1'-0"

STANDARD DWG. NO.	IA–1645
DATE Jul 2013	PAGE 5 OF 8

		Date
Designed		
Drawn	J.Gibbs/J.Sandstrom	7/12
Checked		
Approved		

LARGE ANIMAL MORTALITY COMPOSTING FACILITY
15'W x 18'L x 8'H BINS WITH TIMBER ROOF
CONCRETE STEEL REINFORCEMENT DETAILS
Sheet 1 OF 3

NRCS
Natural Resources Conservation Service
United States Department of Agriculture

File No.

Drawing No.

Sheet _ of _

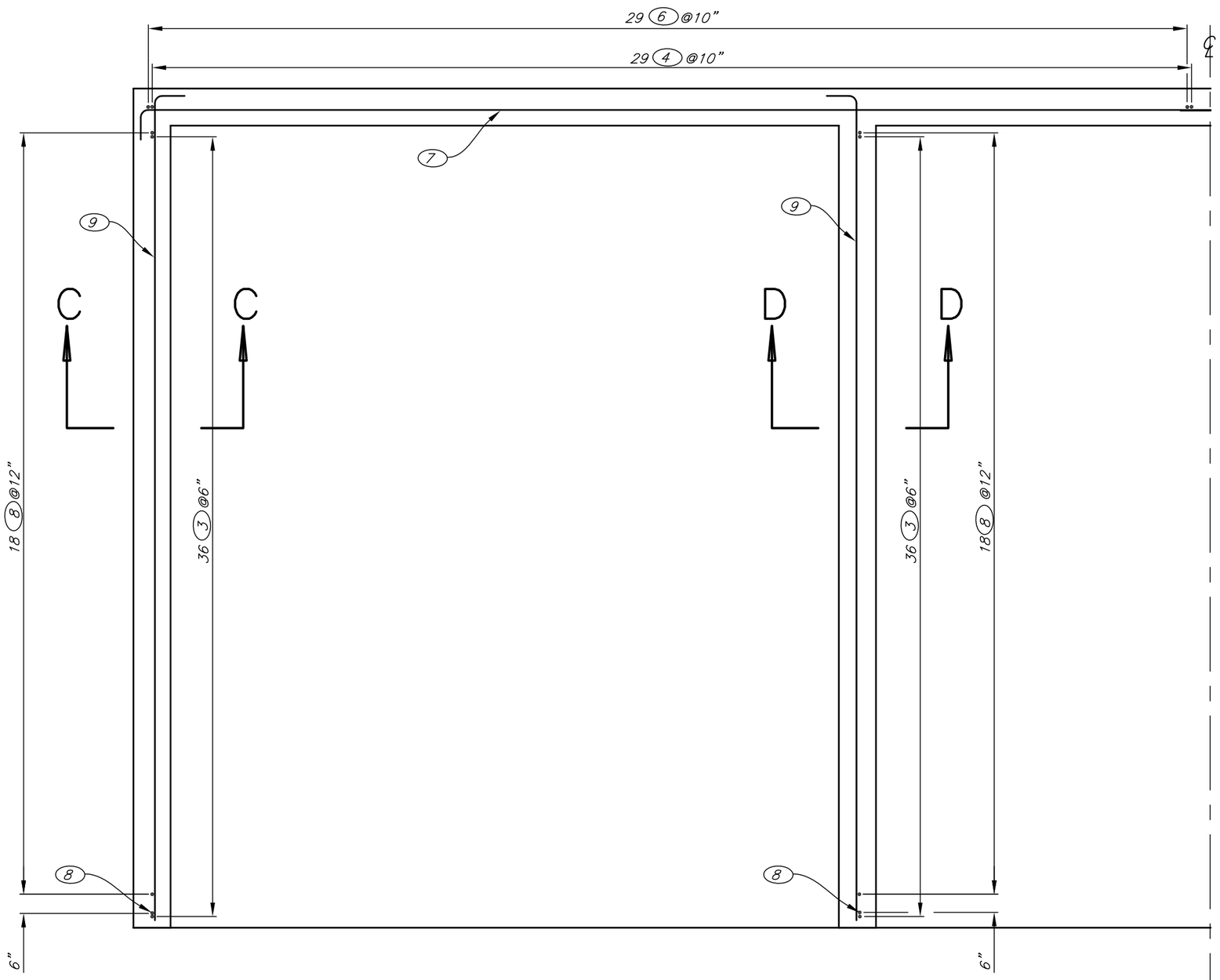

Vertical steel centered in 10" wall thickness
Symmetrical about centerline

PLAN VIEW – WALLS

3/8"=1'–0"

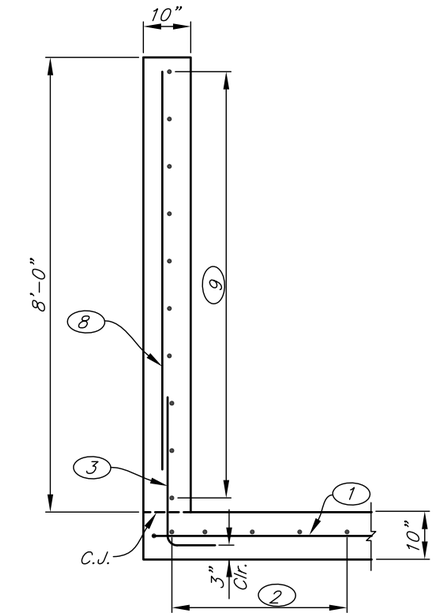

Vertical steel centered in 10" wall
Longitudinal floor steel centered in 10" floor

SECTION C–C

END WALL
3/8"=1'–0"

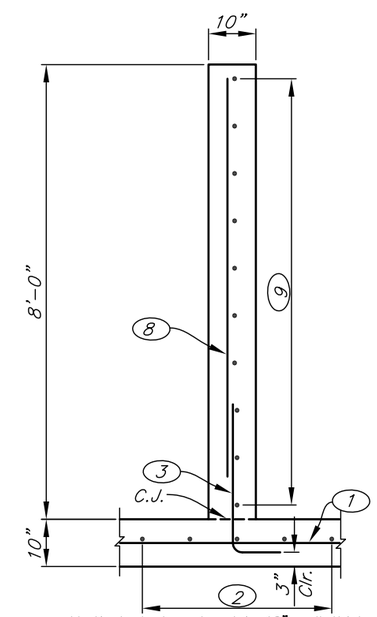

Vertical steel centered in 10" wall thickness
Longitudinal steel centered in 10" floor thickness

SECTION D–D

INTERIOR WALL
3/8"=1'–0"

STANDARD DWG. NO. IA–1645	
DATE Jul 2013	PAGE 6 OF 8

Date

Designed

Drawn J.Gibbs/J.Sandstrom 7/12

Checked

Approved

LARGE ANIMAL MORTALITY COMPOSTING FACILITY
15'W x 18'L x 8'H BINS WITH TIMBER ROOF
CONCRETE STEEL REINFORCEMENT DETAILS
Sheet 2 OF 3

NRCS
Natural Resources Conservation Service
United States Department of Agriculture

File No.

Drawing No.

Sheet _ of _

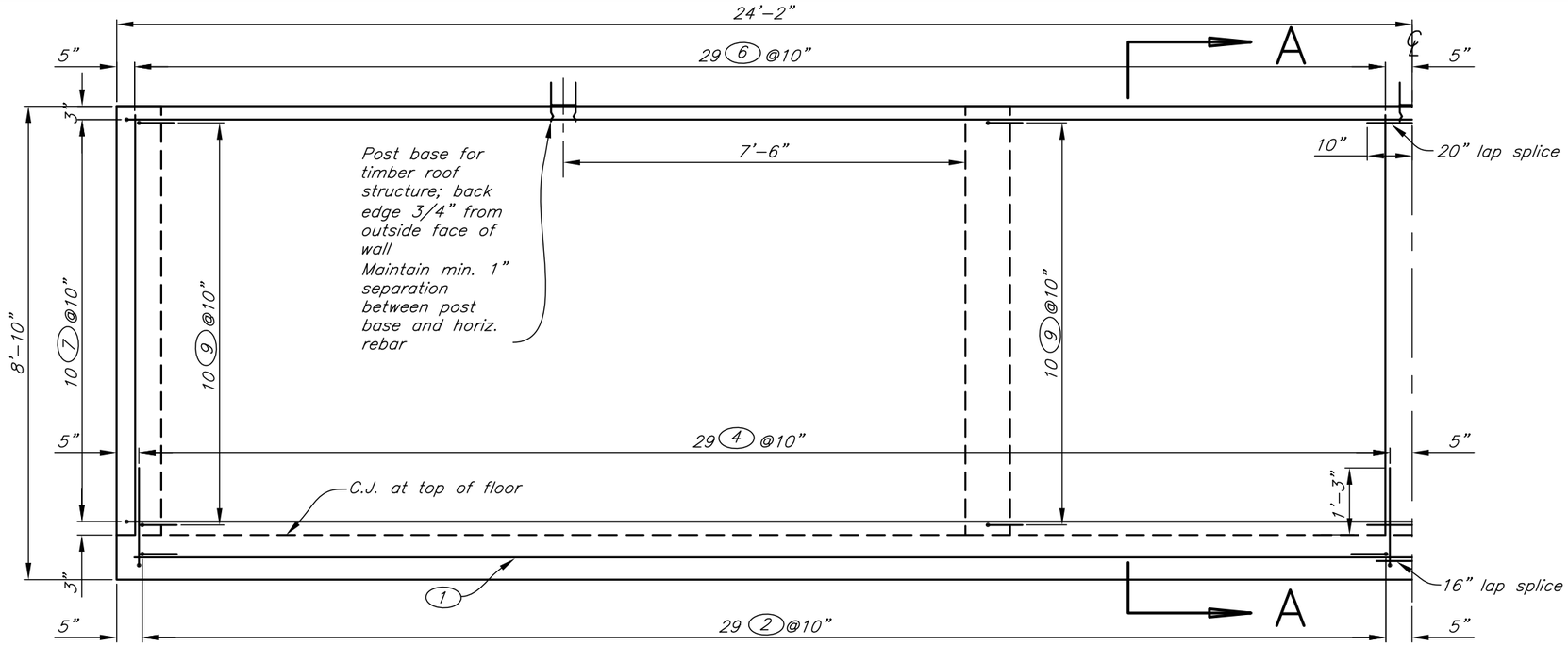

Vertical steel centered in 10" wall thickness

symmetrical about centerline

REAR WALL HALF ELEVATION

3/8"=1'-0"

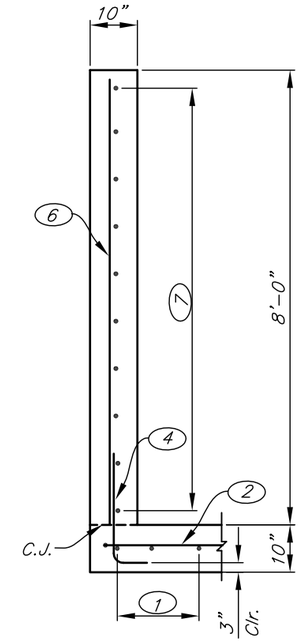

SECTION A–A

REAR WALL
3/8"=1'-0"

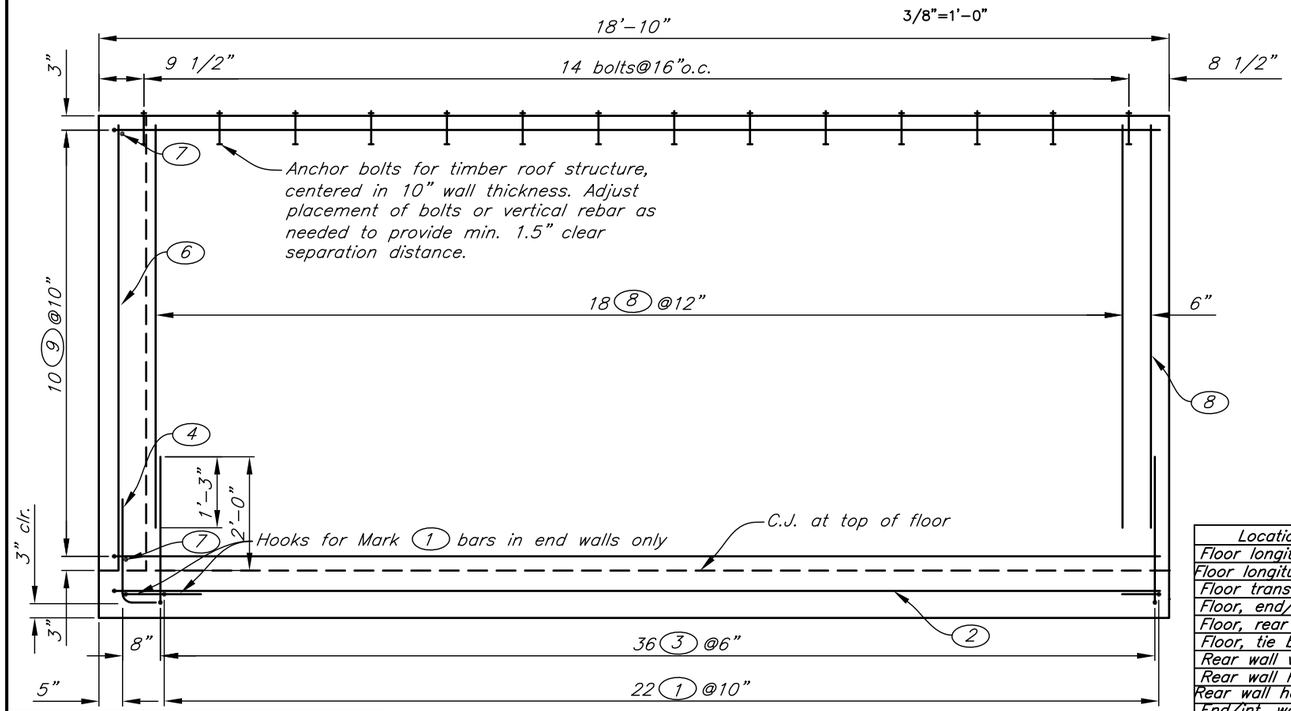

Vertical steel centered in 10" wall thickness

END WALL/INTERIOR WALL ELEVATION

3/8"=1'-0"

STEEL TYPES

Str.

A B
TYPE 2

NOTES:

1. All exposed concrete edges and corners shall be rounded or chamfered $\frac{3}{4}$".
2. Bar spacing is measured from center to center.
3. C.J.=construction joint

TOTAL STEEL QUANTITIES			
#Bins	Length	Pounds	# of bars
3	5204–4	3477	518
4	6792–11	4538	679
5	8381–6	5599	840
6	9970–1	6660	1001

STEEL SCHEDULE

			Number of Bins								Total Length			
			3	4	5	6								
Location	Mark	Size	Quantity				Length	Type	A	B	3 Bins	4 Bins	5 Bins	6 Bins
Floor longitudinal	1	4	46	46	46	46	25–4	2	0–8	24–8	1165–4	1165–4	1165–4	1165–4
Floor longitudinal splice	1a	4	0	23	46	69	17–2	str	—	—	0	394–10	789–8	1184–6
Floor transverse	2	4	58	77	96	115	19–2	2	0–8	18–6	1111–8	1475–10	1840–0	2204–2
Floor, end/int walls	3	4	144	180	216	252	3–3	2	0–8	2–7	468–0	585–0	702–0	819–0
Floor, rear wall	4	4	58	77	96	115	2–6	2	0–8	1–10	145–0	192–6	240–0	287–6
Floor, tie bars	5	4	18	24	30	36	2–6	str	—	—	45–0	60–0	75–0	90–0
Rear wall vertical	6	4	58	77	96	115	7–10	str	—	—	454–4	603–2	752–0	900–10
Rear wall horizontal	7	4	20	20	20	20	25–6	2	0–8	24–10	510–0	510–0	510–0	510–0
Rear wall horiz. splice	7a	4	0	10	20	30	17–6	str	—	—	0	175–0	350–0	525–0
End/int. walls vert.	8	4	76	95	114	133	7–1	str	—	—	538–4	672–11	807–6	942–1
End/int. walls hor.	9	4	40	50	60	70	19–2	2	0–8	18–6	766–8	958–4	1150–0	1341–8

For longitudinal and horizontal bars (Marks 1, 1a, 7 and 7a), alternate lengths and splice locations are acceptable with approval of Engineer. Provide min. 16" lap splice length for floor steel and min. 20" lap splice for wall steel.

STANDARD DWG. NO. IA–1645

DATE Jul 2013 | PAGE 7 OF 8

Date

Designed

Drawn J.Gibbs/J.Sandstrom 7/13

Checked

Approved

LARGE ANIMAL MORTALITY COMPOSTING FACILITY
15'W x 18'L x 8'H BINS WITH TIMBER ROOF

CONCRETE STEEL REINFORCEMENT DETAILS

Sheet 3 OF 3

NRCS
Natural Resources Conservation Service
United States Department of Agriculture

File No.

Drawing No.

Sheet _ of _

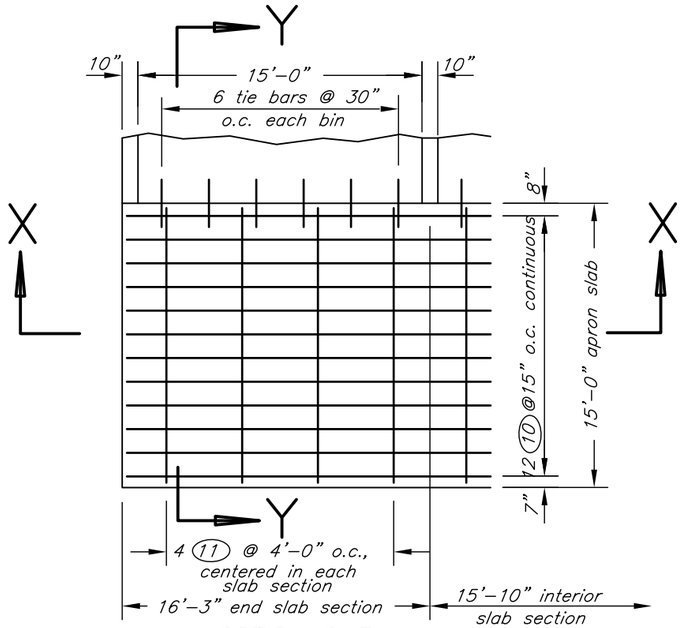

OPTION ONE

1/8"=1'-0"

continuously reinforced concrete slab
no contraction joints

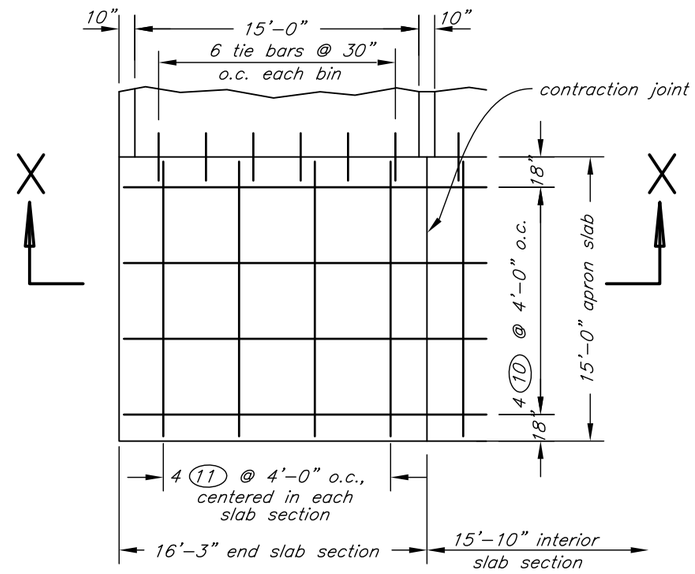

OPTION TWO

1/8"=1'-0"

jointed reinforced concrete slab
reinforcing continuous through contraction joints

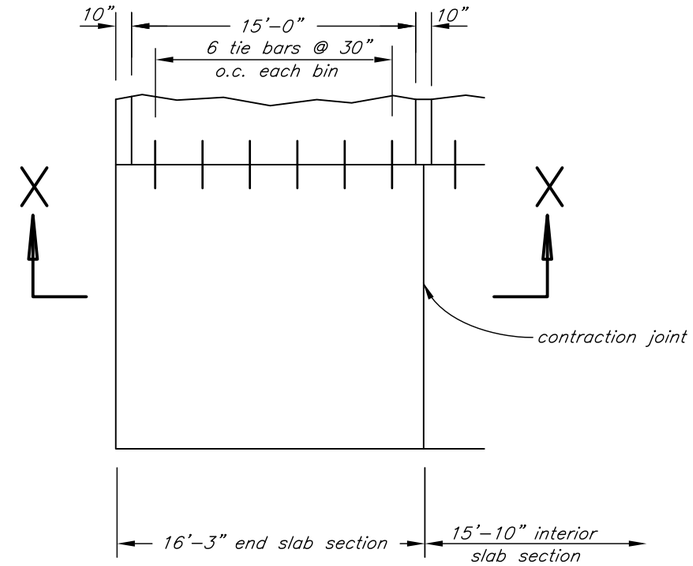

OPTION THREE

1/8"=1'-0"

fiber reinforced concrete slab
with contraction joints
Propex Novomesh 950 synthetic macro-fibers
@ 5lb./cu. yd. or equal

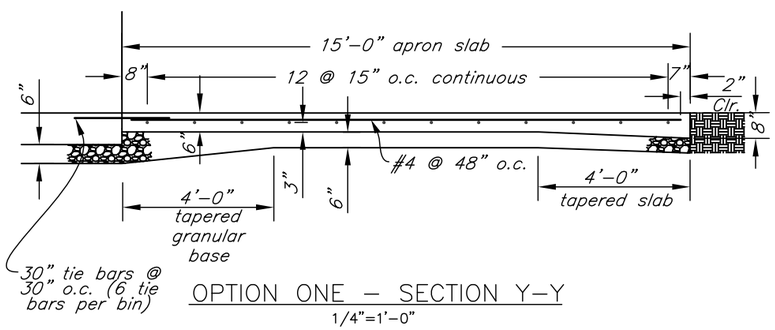

OPTION ONE – SECTION Y–Y

1/4"=1'-0"

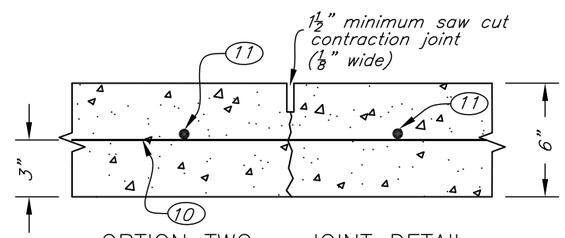

OPTION TWO – JOINT DETAIL

1 1/2"=1'-0"

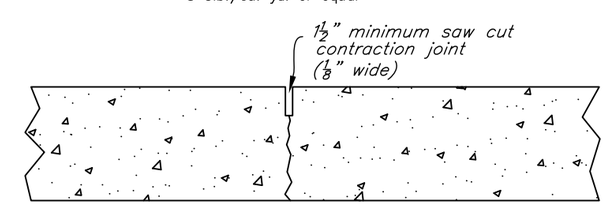

OPTION THREE – JOINT DETAIL

1 1/2"=1'-0"

STEEL SCHEDULE OPTION ONE

			Bar Quantities						Total Length			
Location	Mark	Size	3 Bins	4 Bins	5 Bins	6 Bins	Length	Type	3 Bins	4 Bins	5 Bins	6 Bins
Apron longitudinal	10	4	24	24	24	24	24–8	str	592–0	592–0	592–0	592–0
Apron long. splice	10a	4	0	12	24	36	17–2	str	0–0	206–0	412–0	618–0
Apron transverse	11	4	12	16	20	24	14–8	str	176–0	234–8	293–4	352–0

STEEL SCHEDULE OPTION TWO

			Bar Quantities						Total Length			
Location	Mark	Size	3 Bins	4 Bins	5 Bins	6 Bins	Length	Type	3 Bins	4 Bins	5 Bins	6 Bins
Apron longitudinal	10	4	8	8	8	8	24–8	str	197–4	197–4	197–4	197–4
Apron long. splice	10a	4	0	4	8	12	17–2	str	0–0	68–8	137–4	206–0
Apron transverse	11	4	12	16	20	24	14–8	str	176–0	234–8	293–4	352–0

For longitudinal bars (Marks 10 and 10a), alternate lengths and splice locations are acceptable with approval of Engineer. Provide min. 16" lap splice length. Do not locate splice beneath contraction joint.

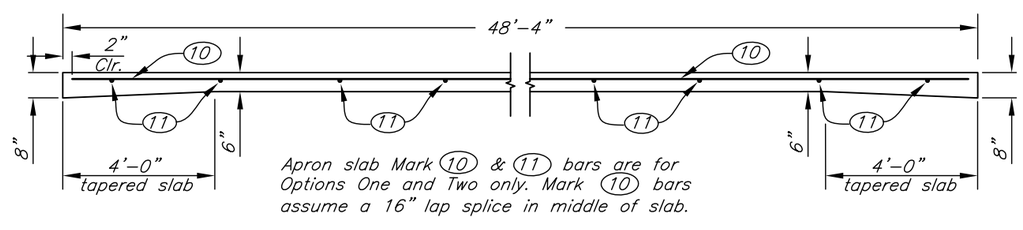

SECTION X–X

1/4"=1'-0"

NOTES:
1. Tie Bars are Mark (5) in Bin Steel Schedule (Page 7). For details, see Page 5.
2. Bar spacing is measured from center to center of bars.

	TOTAL STEEL OPTION 1		
#Bins	Length	Pounds	# of bars
3	768–0	513	36
4	1032–8	690	52
5	1297–4	867	68
6	1562–0	1043	84

	TOTAL STEEL OPTION 2		
#Bins	Length	Pounds	# of bars
3	373–4	249	20
4	500–8	334	28
5	628–0	420	36
6	755–4	504	44

STANDARD DWG. NO. IA 1645

DATE Jul 2013 | PAGE 8 OF 8

Date
Designed
Drawn J.Gibbs/J.Sandstrom 7/13
Checked
Approved

LARGE ANIMAL MORTALITY COMPOSTING FACILITY
15'W x 18'L x 8'H BINS WITH TIMBER ROOF
CONCRETE APRON DETAILS

NRCS
Natural Resources Conservation Service
United States Department of Agriculture

File No.
Drawing No.
Sheet of