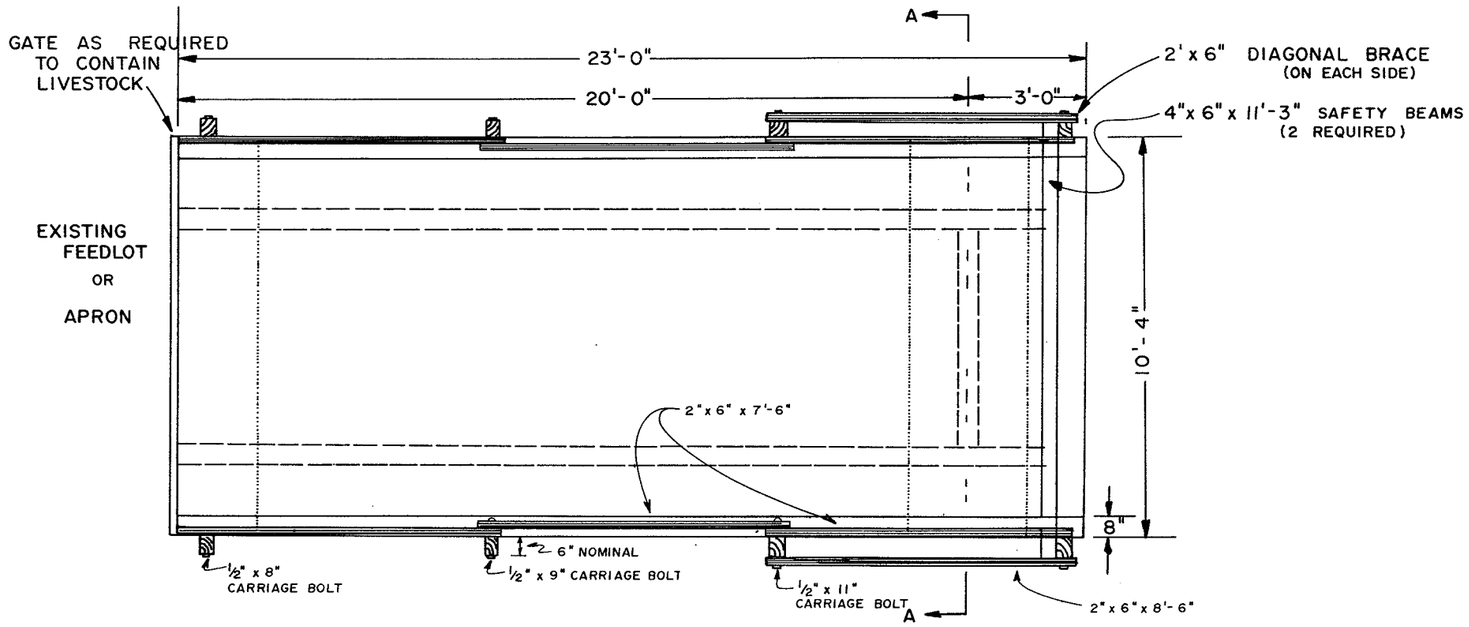

PLAN VIEW

NOTES

1. ALL EXPOSED METAL SURFACES SUCH AS BEAMS AND BOLTS ARE TO BE GALVANIZED OR PROTECTED WITH CORROSION RESISTANT PAINT.
2. SURFACES SHALL BE PREPARED IN ACCORDANCE WITH PAINT MANUFACTURERS' RECOMMENDATIONS.
3. THE PLATFORM IS DESIGNED TO CARRY A TRACTOR HAVING A GROSS WEIGHT OF 14,250 LBS. (LIVE LOAD) MAXIMUM WHEEL LOADS = 2 - 5000 LB. LOADS ON 4' CENTERS.
4. CONCRETE - USE 3500 PSI MINIMUM 28 DAY COMPRESSIVE STRENGTH. CONCRETE CONSTRUCTION SHALL BE IN ACCORDANCE WITH SPECIFICATION MI-158 (REINFORCED CONCRETE CONSTRUCTION).
5. STEEL - REINFORCING BARS : USE DEFORMED STEEL F_y = 40,000 PSI MINIMUM (GRADE 40 OR HIGHER). LOCATE STEEL ACCURATELY IN CONCRETE, HOLD FIRMLY IN PLACE WITH WIRE TIES.
6. DO NOT POUR CONCRETE UNTIL S.C.S. TECHNICIAN HAS INSPECTED FORMS AND STEEL PLACEMENT.
7. APPROVAL SIGNATURE FOR STRUCTURAL DESIGN OF PLATFORM ONLY. SUITABILITY OF FOUNDATION AND OTHER SITE CONDITION IS THE RESPONSIBILITY OF THE DESIGNER OF THE ANIMAL WASTE FACILITY. BEARING CAPACITY OF SOIL UNDER COLUMN FOOTINGS MUST BE 2000 POUNDS PER SQUARE FOOT OR MORE.

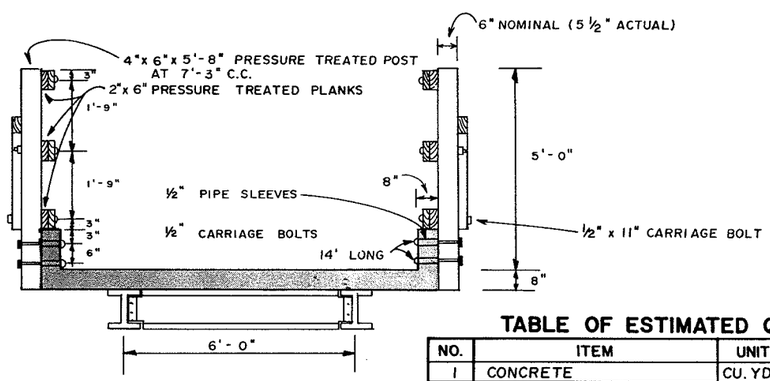

CROSS SECTION A-A

TABLE OF ESTIMATED QUANTITIES

NO.	ITEM	UNIT	QUANTITY	AS BUILT
1	CONCRETE	CU. YD.	9.0*	
2	STEEL BEAMS-W12 x 40 or eq.	L.F.	50	
3	REINFORCING BARS	LBS.	740.7	
4	WELDED WIRE FABRIC-6"x6" 6/6	S.F.		
5	POST-4"x 6"x 5'-8" pressure treated	EA.	8	
6	PLANKS - 2"x 6"	L.F.	152	
7	BEAM - 4"x 6"x 11'-3"	EA.	2	
8	5/8"x 1-1/4" MACHINE BOLTS	EA.	8	
9	5/8" x 6" " "	EA.	8	
10	5/8" x 12" " "	EA.	8	
11	1/2" x 8" CARRIAGE BOLTS	EA.	10	
12	1/2" x 9" " "	EA.	12	
13	1/2" x 10" " "	EA.	4	
14	1/2" x 11" " "	EA.	2	
15	1/2" x 14" " "	EA.	16	
16	3-1/2"x 3-1/2"x 3/8"x 8" ANGLE	EA.	2	

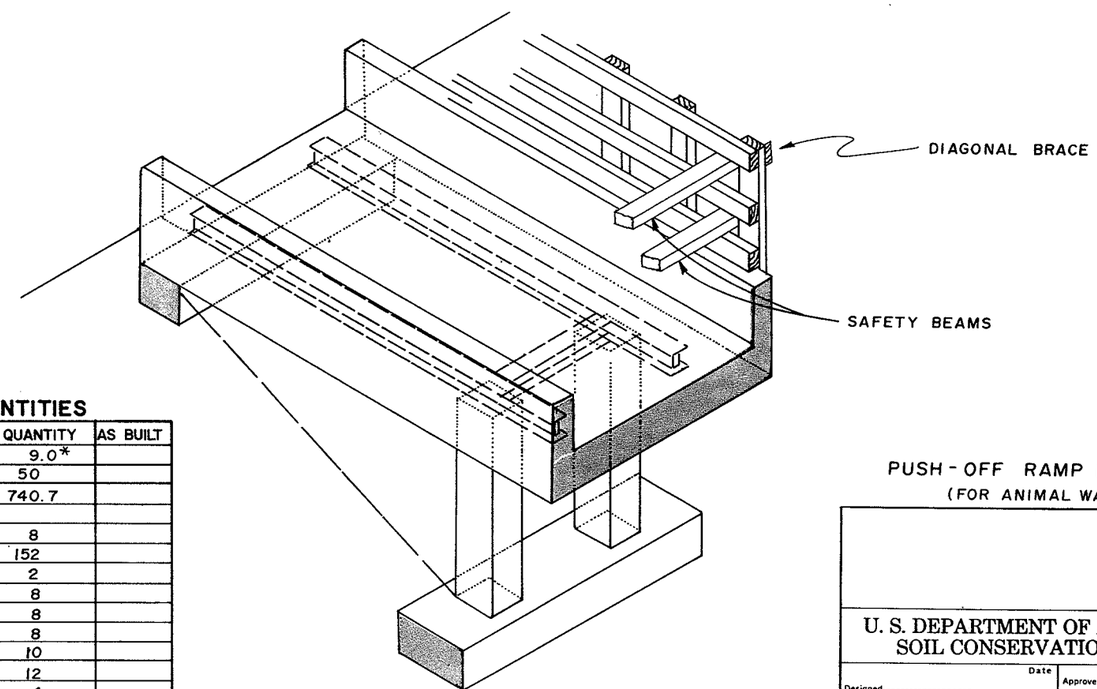

*FOOTING = 1.5 cu. yd.
COLUMNS = .5 "
RAMP = 7.0 "

ISOMETRIC VIEW

DRAWINGS _ NOT TO SCALE

PUSH-OFF RAMP DETAILS
(FOR ANIMAL WASTE)

U. S. DEPARTMENT OF AGRICULTURE
SOIL CONSERVATION SERVICE

Designed	Date	Approved by	
Drawn		Title	
Traced		Title	
Checked		Sheet No. of	Drawing No.

MICHIGAN ENGINEERING STANDARD DRAWING	
APPROVED BY H W Belcher Jr, S.C.E.	DATE 01/03/83
DRAWING NO. SO-E-0435	SHEET 1 OF 3

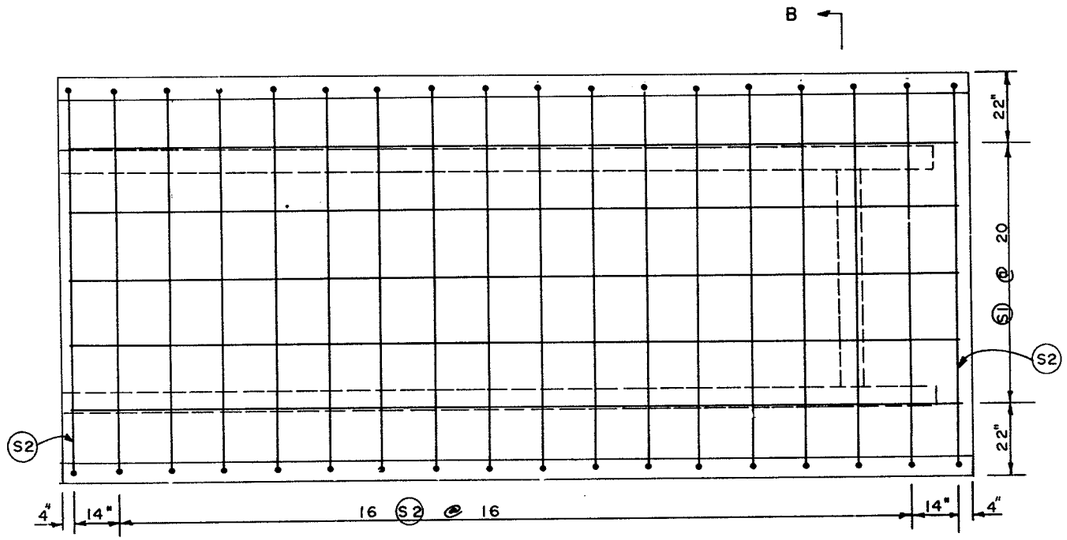

PLAN - TOP PLANE OF STEEL
STEEL 2" FROM TOP OF SLAB

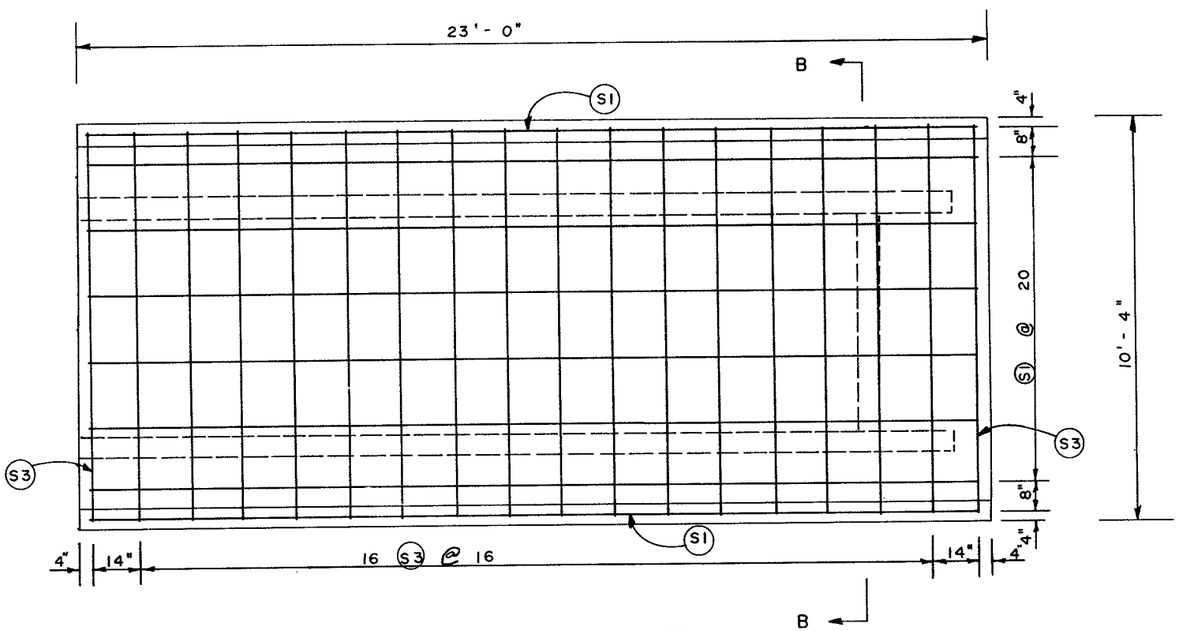

PLAN - BOTTOM PLANE OF STEEL
STEEL 2" FROM BOTTOM OF SLAB

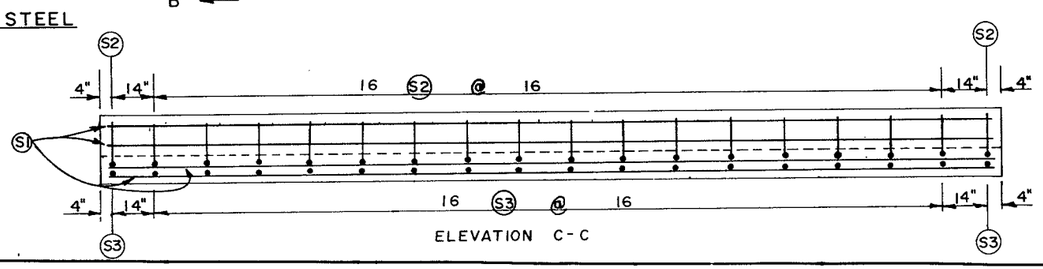

ELEVATION C-C

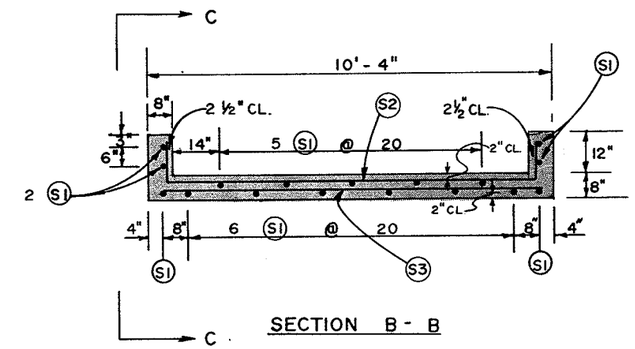

SECTION B - B

BAR TYPES

TYPE 1
STRAIGHT

C TYPE 2 C
B

BEND DIAMETER = 6 BAR DIAMS.

BAR SCHEDULE

MARK	SIZE	QUANTITY	LENGTH	TOTAL LENGTH	TYPE	B	C	LOCATION
S1	4	17	22'-6"	* 382.5'	1	—	—	PLATFORM SLAB
S2	4	18	11'-3"	202.5'	2	9'-5"	0'-11"	PLATFORM SLAB
S3	4	18	9'-8"	174.0'	1	—	—	PLATFORM SLAB

*ADD 15" FOR EACH LAP SPLICE

PUSH - OFF RAMP DETAILS
(FOR ANIMAL WASTE)

U. S. DEPARTMENT OF AGRICULTURE
SOIL CONSERVATION SERVICE

Designed ..... Date ..... Approved by .....
Drawn ..... Title .....
Traced ..... Title .....
Checked ..... Sheet No. ..... of ..... Drawing No.

MICHIGAN ENGINEERING STANDARD DRAWING
APPROVED BY , S.C.E. DATE 01/03/83
DRAWING NO. SO-E-0435 SHEET 2 OF 3

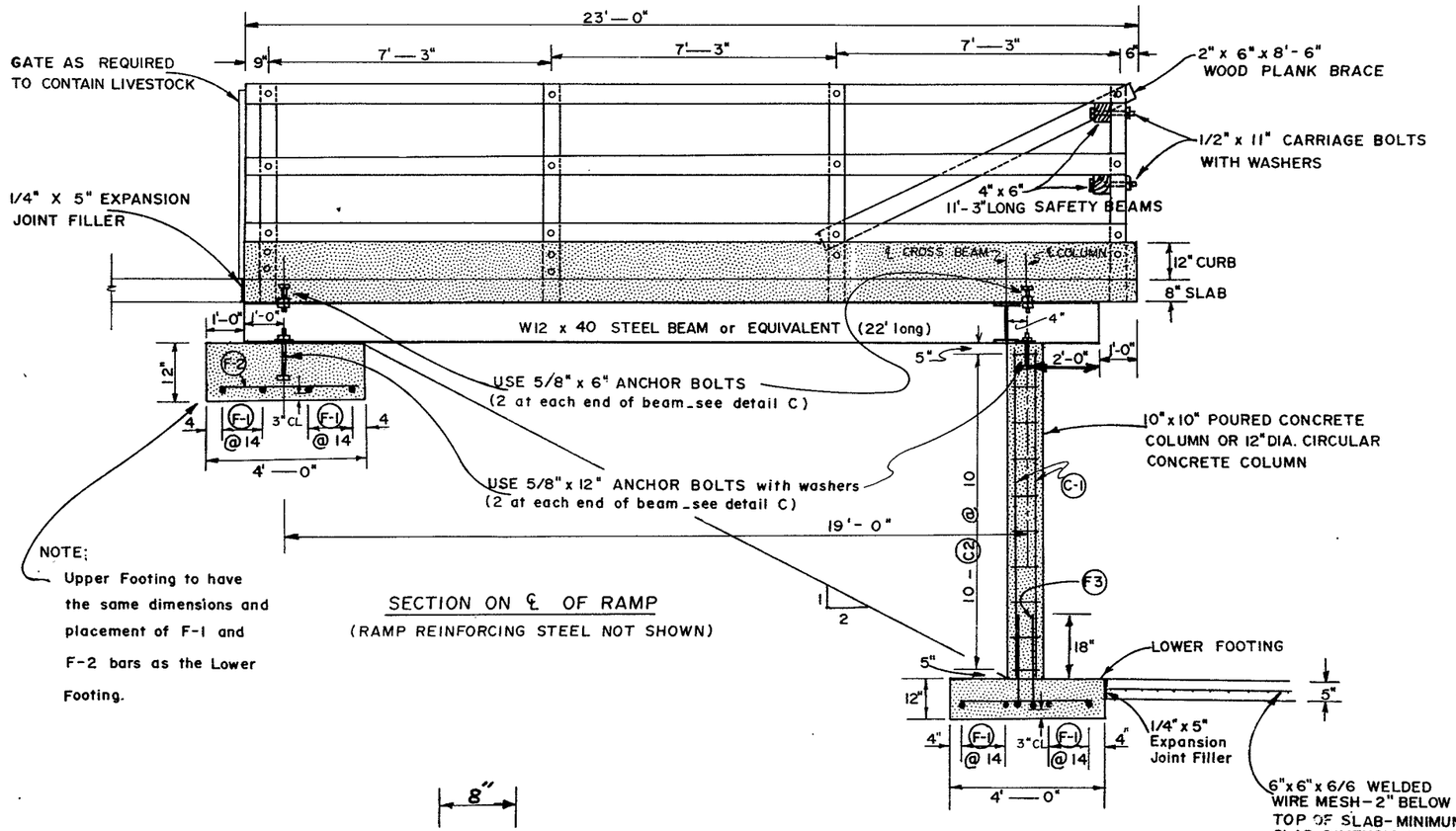

SECTION ON ℄ OF RAMP

(RAMP REINFORCING STEEL NOT SHOWN)

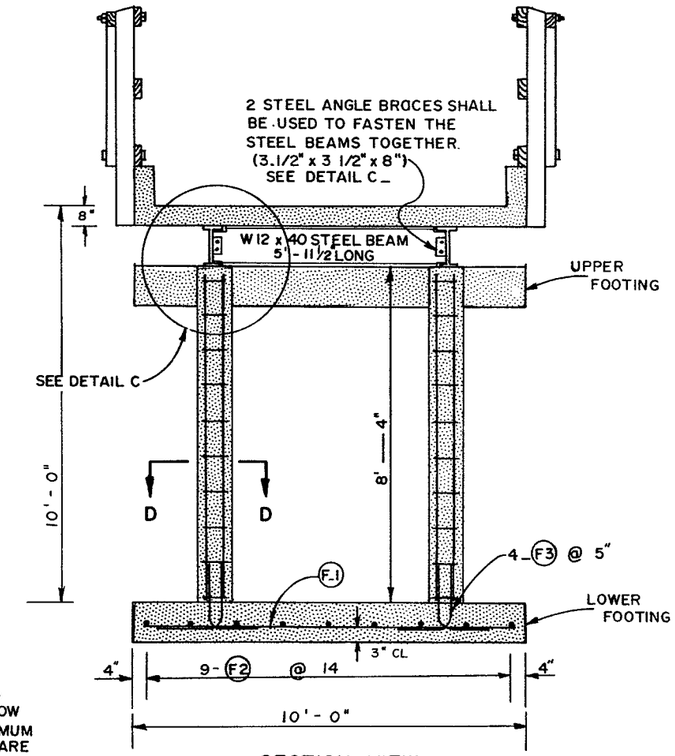

SECTION VIEW

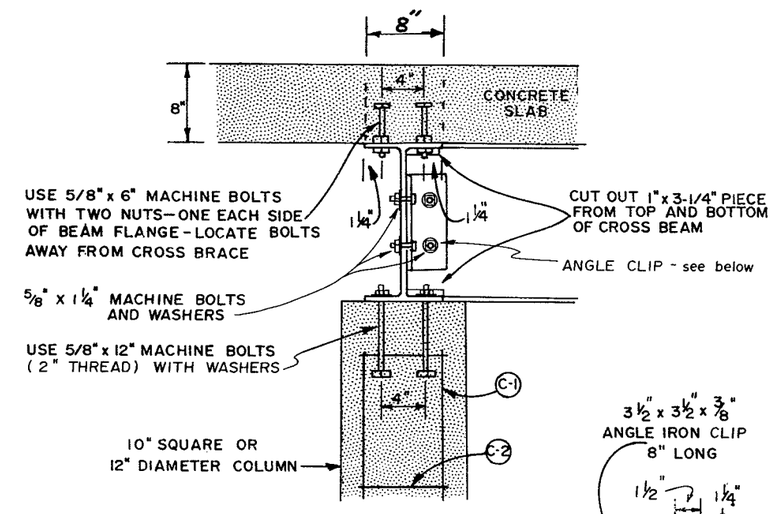

DETAIL — C

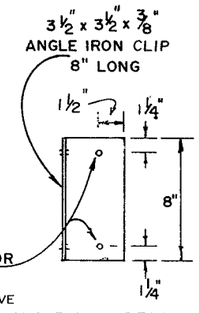

ANGLE CLIP DETAIL

DRAWING NOT TO SCALE

BAR TYPES

TYPE 1 — STRAIGHT

TYPE 3 — B, C; bend dia. = 6 bar dia.

TYPE T2 — B, B, C, C; bend dia. = 4 bar dia.

BAR SCHEDULE

MARK	SIZE	QUANTITY	LENGTH	TOTAL LENGTH	TYPE	B	C	LOCATION
F-1	5	8	9'-6"	76.0'	1			FOOTINGS
F-2	5	18	3'-6"	63.0'	1			FOOTINGS
F-3	5	8	3'-9"	30.0'	3	2'-3"	1'-6"	FOOTINGS
C-1	5	8	8'-0"	64.0'	1			COLUMN
C-2	3	20	2'-10"	56.7'	T2	6 3/8"	4"	COLUMN

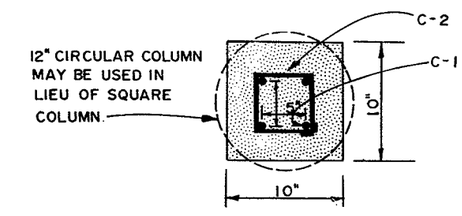

SECTION D-D

PUSH-OFF RAMP DETAILS
(FOR ANIMAL WASTE)

U. S. DEPARTMENT OF AGRICULTURE
SOIL CONSERVATION SERVICE

Designed ____ Date ____ Approved by ____
Drawn ____ Title ____
Traced ____ Title ____
Checked ____ Sheet No. ____ of ____ Drawing No. ____

MICHIGAN ENGINEERING STANDARD DRAWING

APPROVED BY ____, S.C.E. DATE 01/03/83

DRAWING NO. SO-E-0435 SHEET 3 OF 3

Rev. 2/17/84