Activity 1

At this time, complete Activity 1 in your Study Guide to review the material just covered. After finishing the activity, compare your answers with the solution. When you are satisfied that you understand the material, continue with the Study Guide text.

1. List three factors that cause variation in discharge at a point.

a.

b.

c.

2. List two conditions that describe critical flow.

a.

b.

3. A channel has an area = 54 sq. ft. and a top width of 30 feet. Determine the critical flow.

4. List four channel factors that affect the flow conditions.

a.

b.

c.

d.

5. Determine a, p, r, d, T and dm for the following channel

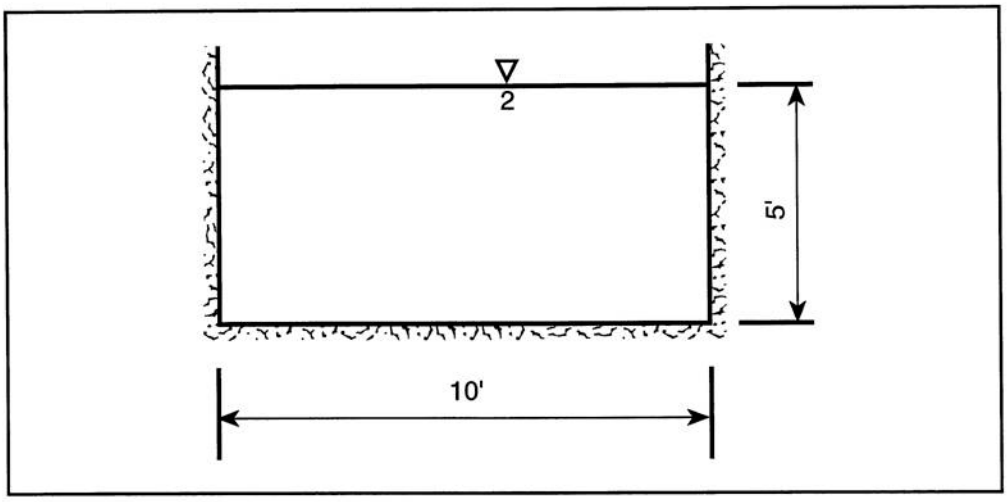

6. Determine a, p, r, d, T and dm for the following channel:

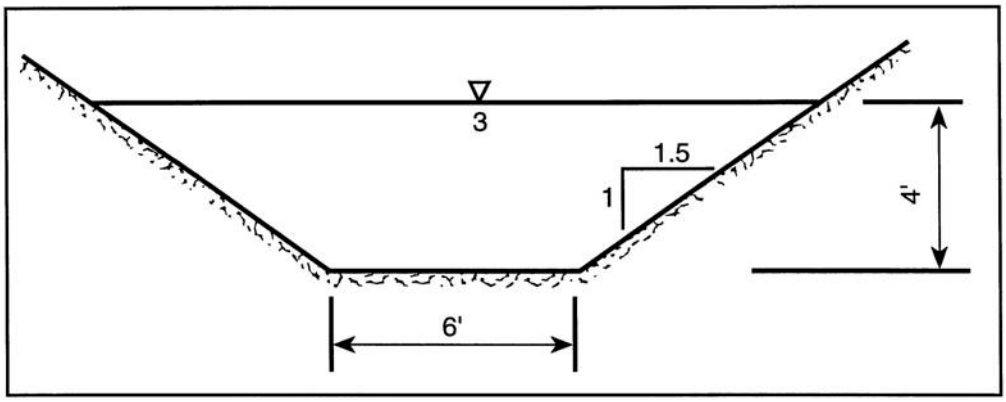

7. When do downstream conditions affect the flow at a cross-section?

Generated by a Trial Version of NetCentric Technologies' CommonLook® Acrobat® Plug-in. www.net-centric.com

Activity 2

At this time, complete Activity 2 in your Study Guide to review the material just covered. After finishing the Activity, compare your answers with the solution provided. When you are satisfied that you understand the material, continue with the Study Guide text.

1. List five factors that are considerations in developing roughness coefficient - n.

a.

b.

c.

d.

e.

2. Determine a, p, r, d, T and dm for the following channel. Determine the velocity and flow in this channel. S = 0.005 ft/ft, channel is clean, straight with considerable amount of weeds and stones.

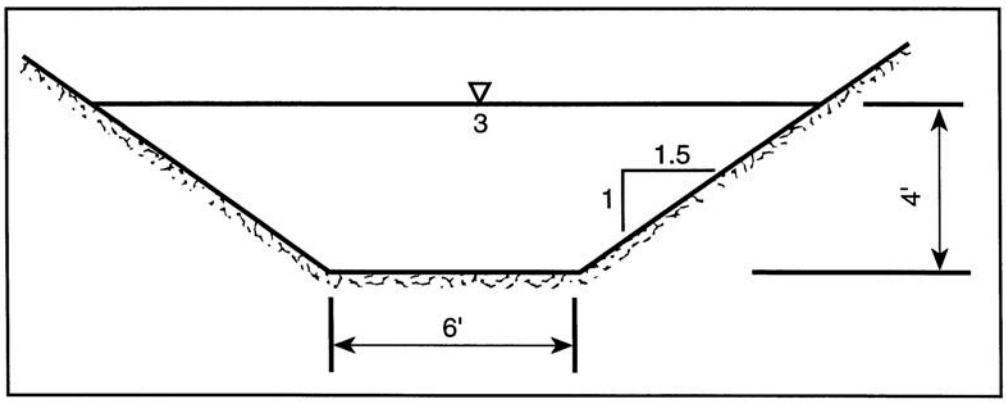

Generated by a Trial Version of NetCentric Technologies' CommonLook® Acrobat® Plug-in. www.net-centric.com

3. Determine the velocity and flow in a rectangular concrete lined channel with the following dimensions:

b = 10 ft d=5ft

s = 0.005 ft/ft.

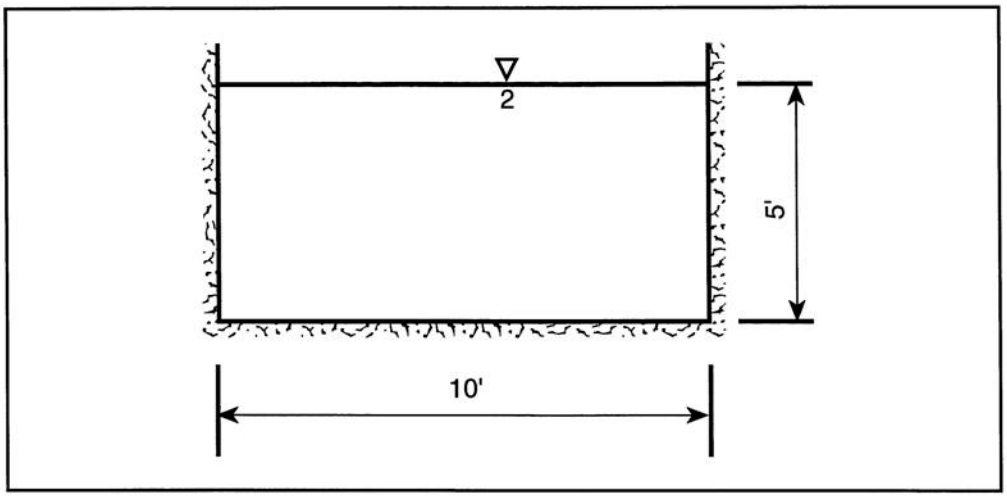

4. Compute the velocity and flow in a parabolic vegetative channel with a bed slope of 0.2% and the following channel characteristics:

T = 80.0 ft. d = 4.0 ft.

Generated by a Trial Version of NetCentric Technologies' CommonLook® Acrobat® Plug-in. www.net-centric.com

Activity 3

At this time, complete Activity 3 in your Study Guide to review the material just covered. After finishing the activity, compare your answers with the solutions provided. When you are satisfied that you understand the material, continue with the Study Guide Text.

1. Design a drainage ditch to carry 30 cfs with a slope of 0.0004 ft/ft and n = 0.045.

Solution

2. Design a drainage ditch for Q = 100 cfs, s = 0.001 ft/ft and n = 0.045.
Use both BW = 4 and 6.

Solution

Activity 4

At this time, complete Activity 4 in your Study Guide to review the material just covered. After finishing the Activity, compare your answers with the solution provided. When you are satisfied that you understand the material, continue with the Study Guide Text.

1. A channel has a hydraulic radius of 0.38 feet and a velocity = 4.0 fps. What is the Manning's n for D retardance? B retardance?

2. What retardance factor applies to:

   a. Red fescue-good stand, headed?

   b. Smooth bromegrass-good stand, (mowed 12-15 inches)?

   c. Bermudagrass-good stand, mowed (6 inches)?

3. Determine permissible velocities for each of the following:

a. Weeping lovegrass-3 percent slope, easily eroded soil.

b. Kentucky bluegrass-S percent slope, erosion resistant soil

c. Reed canarygrass-5 percent slope, erosion resistant soil.

d. Bermudagrass-12 percent slope, easily eroded soil.

4. Why are grassed waterways normally designed as parabolic channels?

Activity 5

At this time, complete Activity 5 in your Study Guide to review the material just covered. After finishing the Activity, compare your answers with the solution provided. When you are satisfied that you understand the material, continue with the Study Guide Text.

1. Describe the purpose of a diversion.

2. List two cases where diversion design may require design velocities based on bare soil.

a.

b.

3. DetermineV_1, T_1d and V_2 for the following parabolic channel.

Given

redtop (15-20 in) vegetation in fair condition Q = 120 cfs
grade = 3 percent
silty clay loam soil

Solution

4. Determine d, A and V for a trapezoidal channel.

Given Q = 80 *cfs*

permissible velocity = 3.5 fps proposed side slopes of diversion = 3.1 bottom width = 8 feet
vegetation retardance = D
grade = 0.3 percent

Solution

5. Could the channel in problem four above be designed as a triangular channel?

Activity 6

At this time, complete Activity 6 in your Study Guide to review the material just covered. After finishing the activity, compare your answers with the solutions provided. When you are satisfied that you understand the material, continue with the Study Guide Text.

1. Which statements are true/false?

a. Emergency spillways are designed to pass flows greater than the principal spillway capacity.

b. Earth spillways are always designed with vegetative cover.

c. Emergency spillways must pass the design peak flow and discharge to a point away from the embankment without causing appreciable erosion.

d. Design peak flow for the emergency spillway is the peak of the reservoir inflow.

2. Name the three segments of an excavated earth spillway.

Section:

Section:

Section:

3. Locate the segments on the sketch.

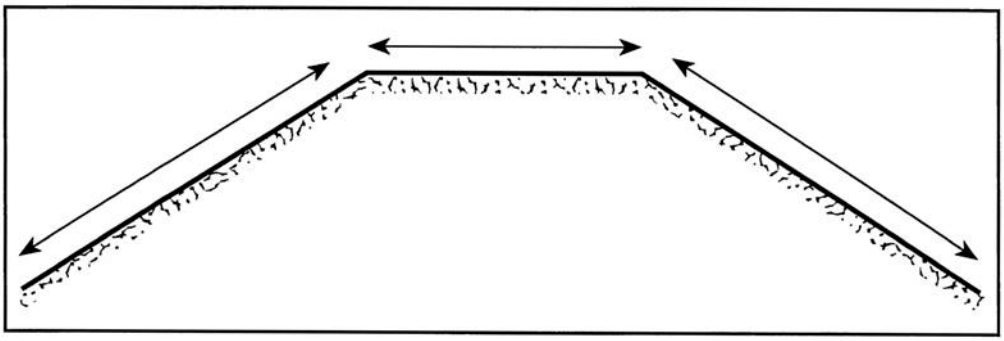

Generated by a Trial Version of NetCentric Technologies' CommonLook® Acrobat® Plug-in. www.net-centric.com

4. Determine bottom width and reservoir stage for an excavated earth channel with the following:

Given:
Q = 70 cfs

L=25ft

Exit section slope = 3 percent

Erosion resistant soil

Vegetation: Kentucky bluegrass, good stand Height: 6 to 10 inches

Solution

5. Determine bottom width and reservoir stage for an excavated earth spillway as follows:

Given

Q = 125 cfs

L = 100 ft

Exit slope = 2.6 percent

Erosion resistant soil

Vegetation: Bermudagrass, good stand Height: 11 to 24 inches

Solution

6. True or False. A natural spillway would be considered only when an excavated spillway will not meet criteria.

7. List two advantages for the use of natural spillways.

a.

b.

8. Determine V and H_p for a natural vegetated spillway with the following:

Given

= 3:1

= 2 percent

Q = 50 cfs

Vegetation: Buffalograss, poor stand, 2 to 6 inches height

Solution

9. Determine V and H_p for a natural vegetated spillway with the following:

Given:

= 3: 1

= = 4 percent

Q = 150 cfs

Vegetation: Bermudagrass, good stand, 11 to 24 inches

Solution

5. Determine retardance, permissible velocity, channel top width, depth and retardance velocity for a grassed waterway.

Given:

Q - 40 cfs

Slope - 2 percent Vegetative cover - Bahiagrass Soil - easily erodible

Solution

6. Determine retardance, permissible velocity, channel top width, depth and retardance velocity for the following grassed waterway:

Given:

Q - 55 cfs

Slope - 3 percent Vegetative cover - Bluegrass Soil - moderately erodible

Solution