29L638

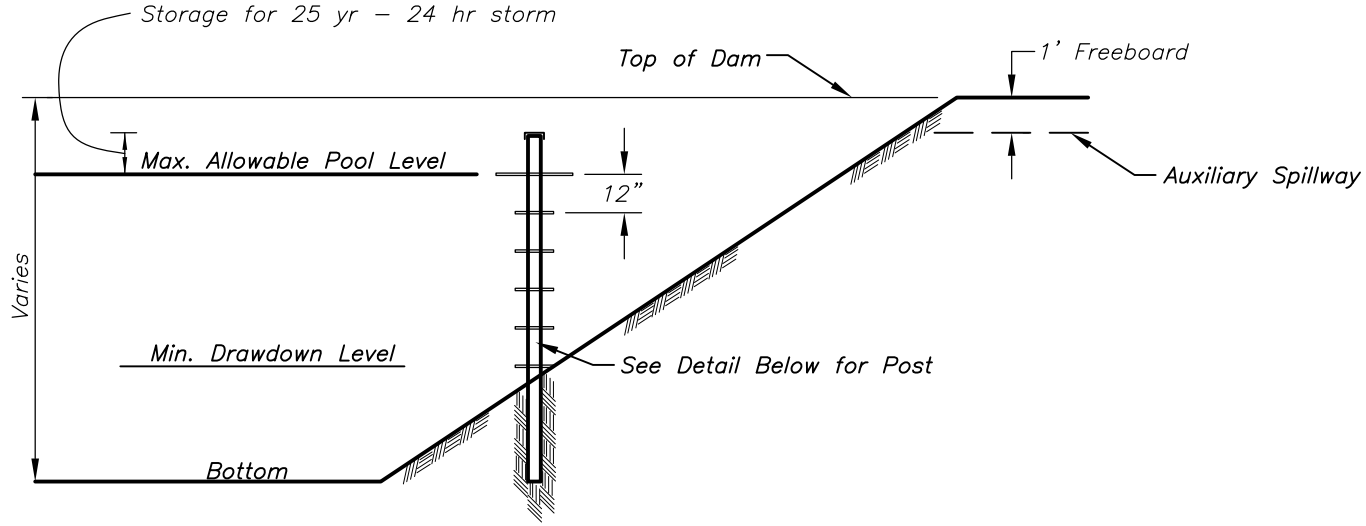

SECTION

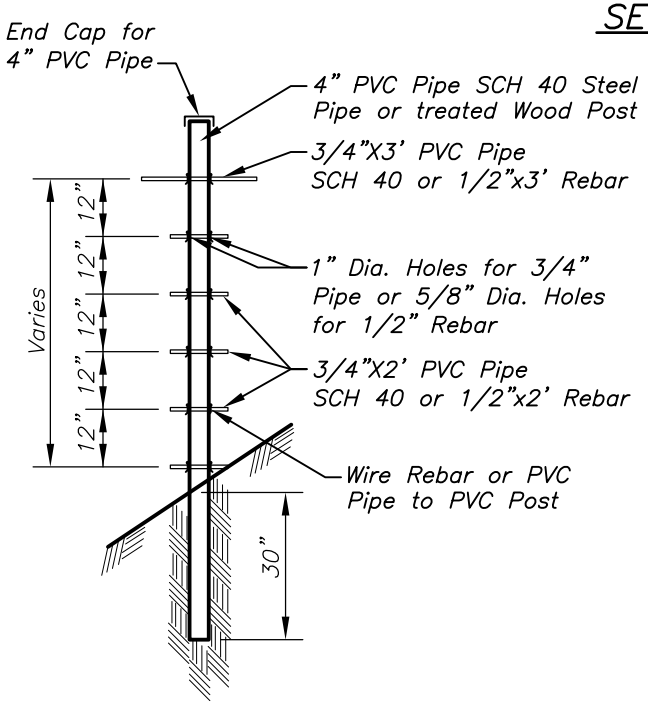

DETAIL–STAFF GAUGE
PVC POST

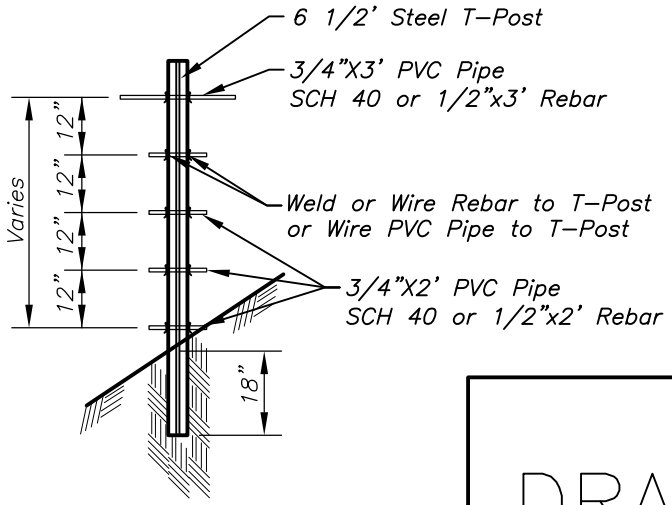

DETAIL–STAFF GAUGE
T–POST

DRAFT

NOT FOR
CONSTRUCTION

Rev. 10/97

Adapted from Arkansas
Std. Drawing AR–ENG–400A

Date
Designed
Drawn
Checked
Approved

STAFF GAUGE FOR
LIQUID ANIMAL WASTE
HOLDING POND OR LAGOON

United States Department of Agriculture
NRCS Natural Resources Conservation Service

File Name

Drawing Name
29–L–638

Sheet of

Toggle Draft Off