29N624B

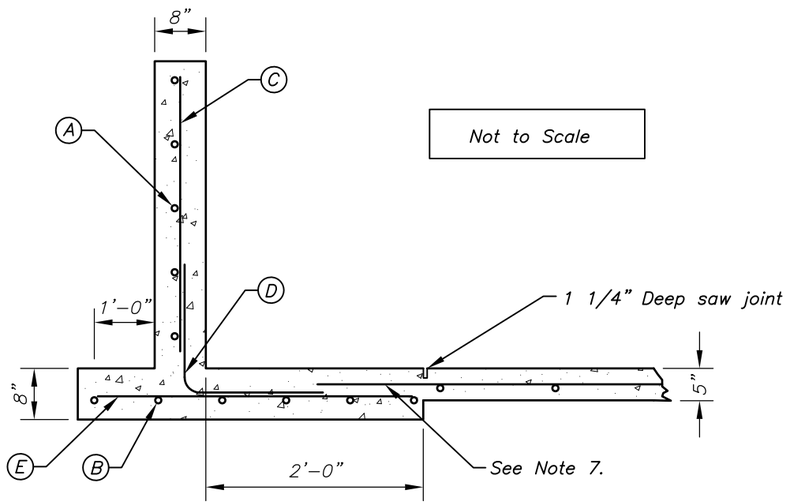

Not to Scale

WALL DETAIL

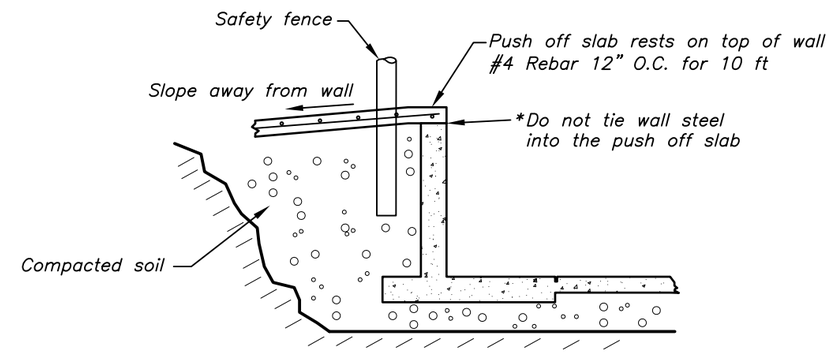

PUSHOFF DETAIL

NOTES:

1. Minimum of 2" cover over any steel.
2. Place posts outside of wall.
3. All hollow post will be capped.
4. All steel must be in place, secured, and approved prior to pouring concrete.
5. For additional details see Construction Specification 313, Waste Storage Facility.
6. All steel splices shall be 15" minimum.
7. Saw joint 1 1/4" deep is to be made as soon as the concrete sets enough to not dislodge aggregate and before any drying stress cracks start to form. Fill saw joints with pourable polyurethane immediately.
8. Every other steel bar shall extend through the saw joint 15 inches. The 15 inches extending through the joint shall be covered with a rubber or plastic hose to prevent bond with concrete. Stop all other steel 3 inches from joint.
9. If soil backfill around the wall is 3 feet or greater, a drain will be required. For details see Missouri Standard Drawing 29–L–618A, 29–L–618B or 29–L–618C.

STEEL QUANTITIES	
Wall Height 1' to 4'	
A	#4 @ 10"
B	#4 @ 12"
C	#4@12" Length = Wall Ht – 4"
D	#4@12" a = 2.0' b = 2.0' Length = 4'
E	#4@12"
F	#4@10" a = 2.0' b = 2.0'

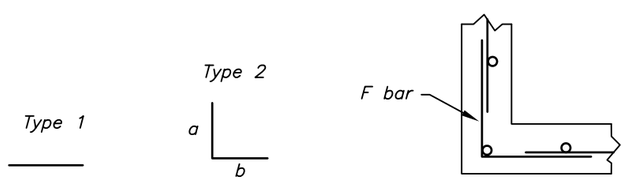

Top View of Corner

MARK	SIZE	SPACING	QUANTITY	TYPE	a	b	LENGTH	TOTAL LENGTH
A	#4	10		1			20'	
B	#4	12		1			20'	
C	#4	12		1			Varies	
D	#4	12		2	2'0"	2'0"	4'	
E	#4	12		1			3'2"	
F	#4	10		2	2'0"	2'0"	4'	

There is no C bar where wall height is less than 1'–7".
A length of bar will need trimmed as wall becomes shorter on ramp.

ESTIMATED QUANTITIES	
Concrete	
– Structural	cy
– Flatwork	cy
Total	cy
Steel Reinforcement	
– Walls/Footing	lf
– Floor	lf
– Gutter Curb	lf
Total	lf

DRAFT

NOT FOR CONSTRUCTION

Date

Designed

Drawn

Checked

Approved

WASTE STORAGE STRUCTURE
METAL SLAT SEEPAGE FENCE

United States Department of Agriculture
NRCS Natural Resources Conservation Service

File Name

Drawing Name
29–N–624B

Sheet of

Revised 2/11

Toggle Draft Off