29N608-3

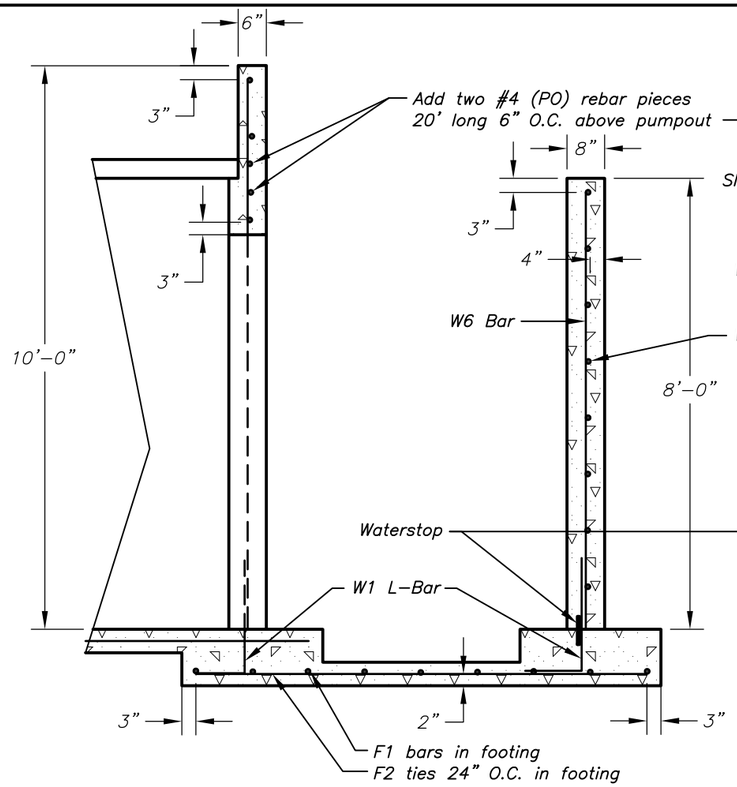

ELEVATION VIEW OF PUMPOUT A-A

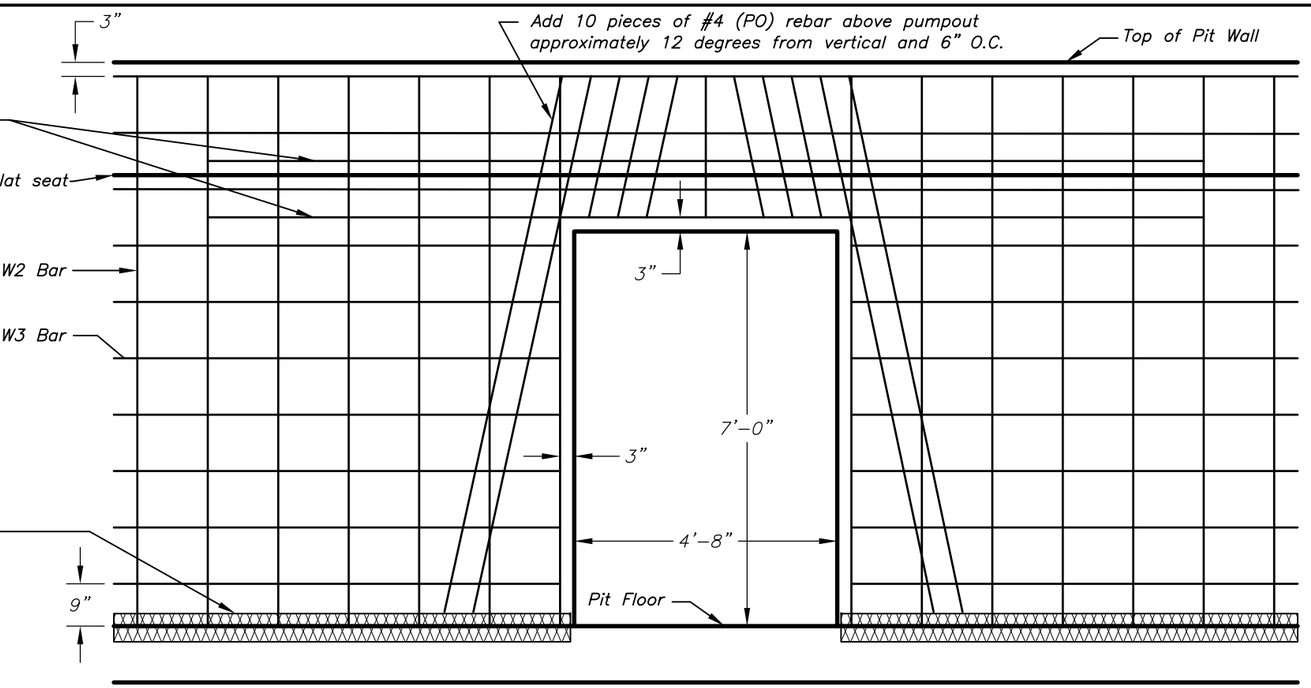

ELEVATION VIEW OF PIT WALL WITH PUMPOUT OPENING

NOTE:
See building plan view for location of pumpout.

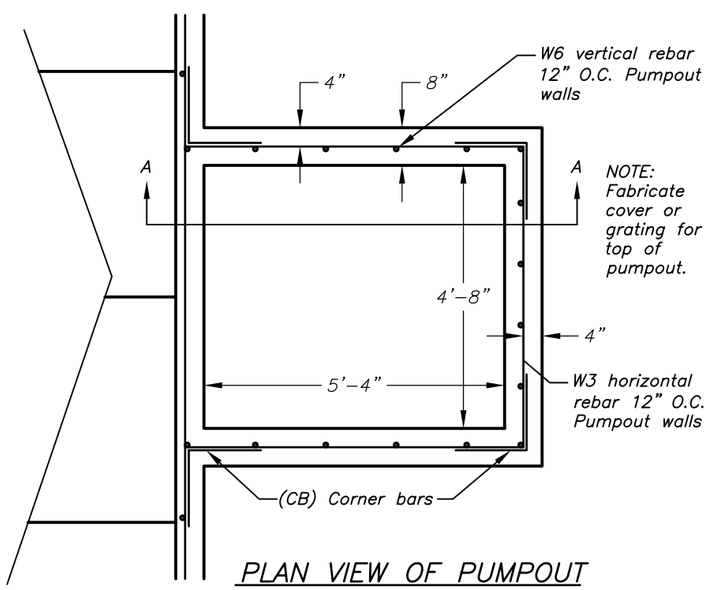

PLAN VIEW OF PUMPOUT

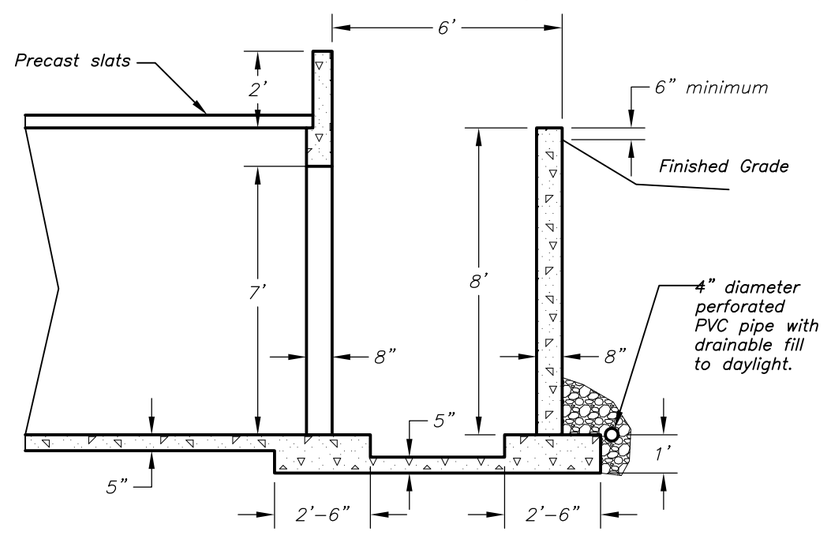

PROFILE OF PUMPOUT

Revised 2/11

Sheet 3 of 5

DRAFT

NOT FOR CONSTRUCTION

Date

Designed

Drawn

Checked

Approved

PUMPOUT REBAR DETAIL
CONCRETE PIT WITH PRECAST SLATS

United States Department of Agriculture
NRCS Natural Resources Conservation Service

File Name

Drawing Name
29-N-608

Sheet of

Toggle Draft Off