29L435

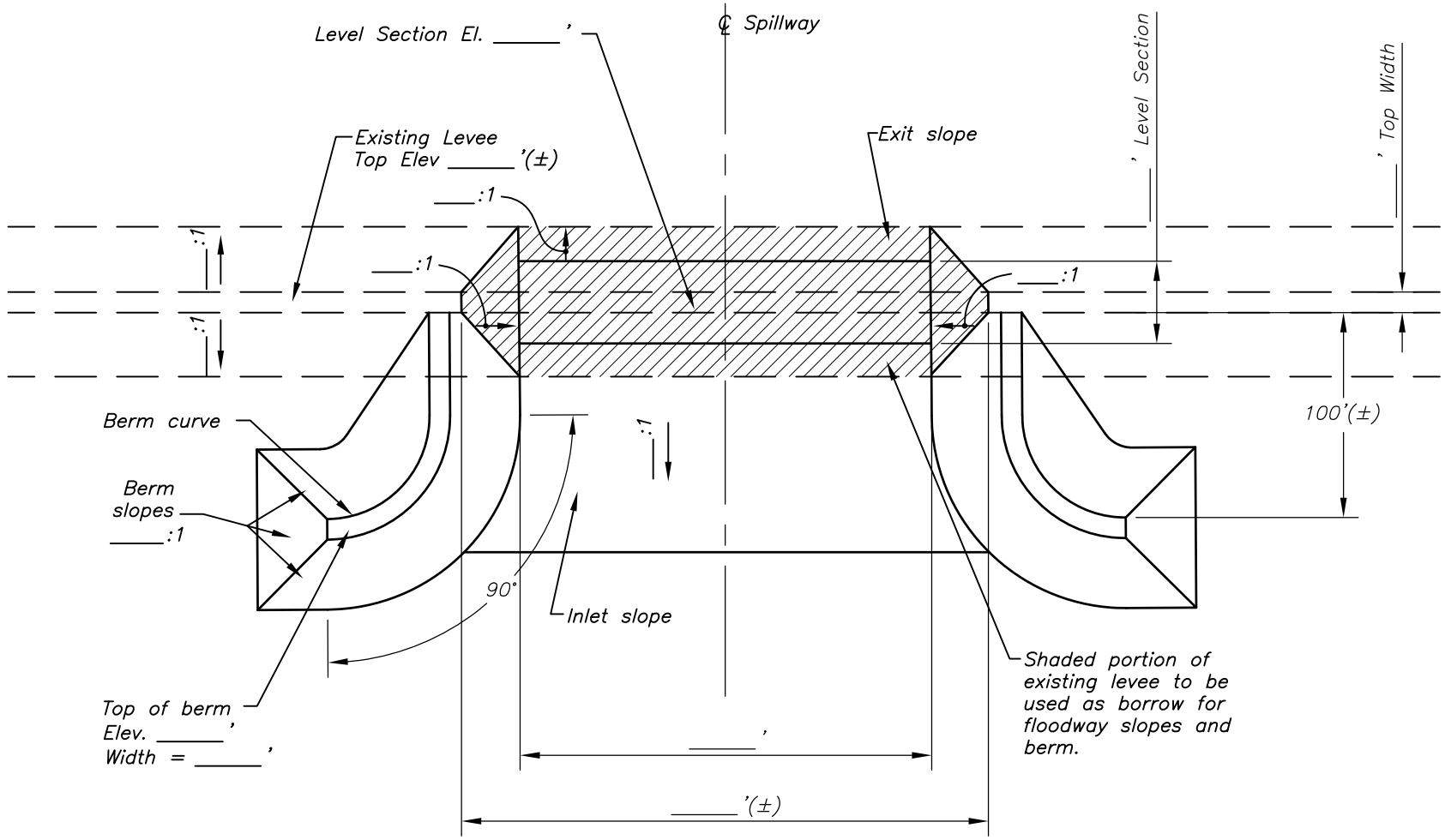

PLAN VIEW

Curve Data	
I	90 deg
R	50 ft
L	78.5 ft

See Plan View of entire site on page _____ of the drawings for the general location of this floodway.

DRAFT

NOT FOR CONSTRUCTION

Date

Designed

Drawn

Checked

Approved

FLOODWAY # ____

United States Department of Agriculture
NRCS Natural Resources Conservation Service

File Name

Drawing Name
29–L–435

Sheet of

5/04

Sheet 1 of 2

Toggle Draft Off