29N350E

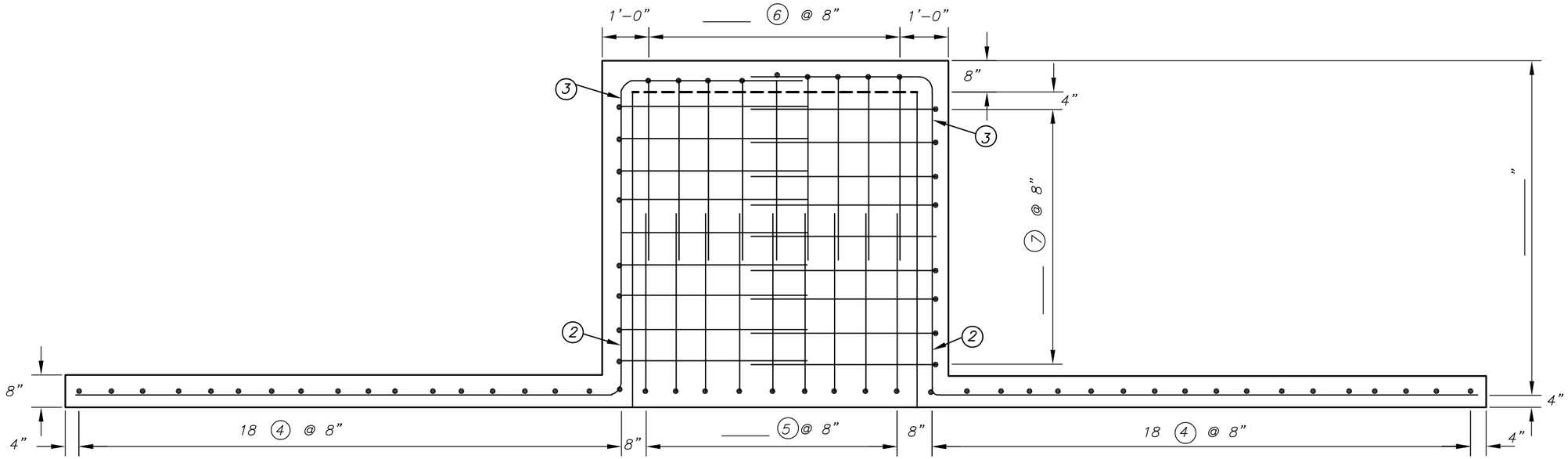

PLAN VIEW

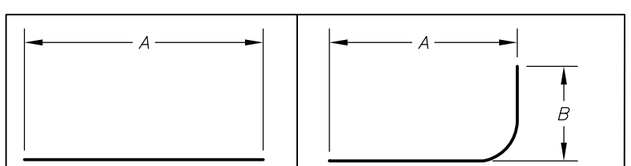

TYPE 1 TYPE 3

BAR SCHEDULE

Mark	Type	Size	Quan	A	B	Total
1	1	4			---	
2	3	4				
3	3	4				
4	1	4			---	
5	3	4				
6	3	4				
7	3	4				
8	1	4			---	

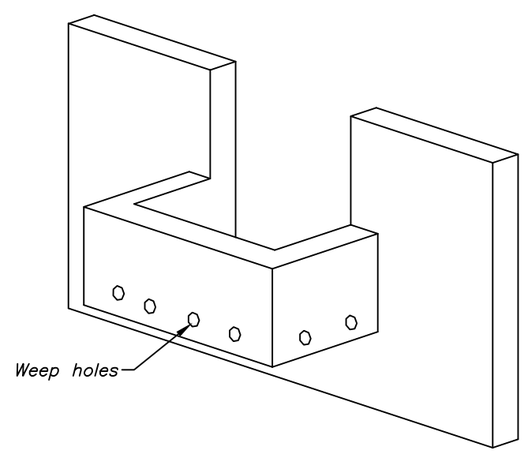

REINFORCED CONCRETE DROPBOX SPILLWAY (5 Foot Overfall)

Headwall Extension (are) (are not) Required	
2 X Length	
Height	
Wall Thickness	
Concrete	cy
Reinforcing Steel	lbs

NOTE:
Use with drawing 29-N-350.

Not to Scale

DRAFT

NOT FOR CONSTRUCTION

Adapted from Ohio Standard Drawing OH-N-305

Revised 8/97

Sheet 3 of 4

Landowner:

REINFORCED CONCRETE DROPBOX SPILLWAY
5 FOOT OVERFALL

Designed
Drawn
Checked
Approved
Date

United States Department of Agriculture
NRCS Natural Resources Conservation Service

File Name

Drawing Name
29-N-350E

Sheet of

Toggle Draft Off