29N340

NOTE: Head wall may need to be extended 4' both ways to insure that ends are buried a min. of 2'.

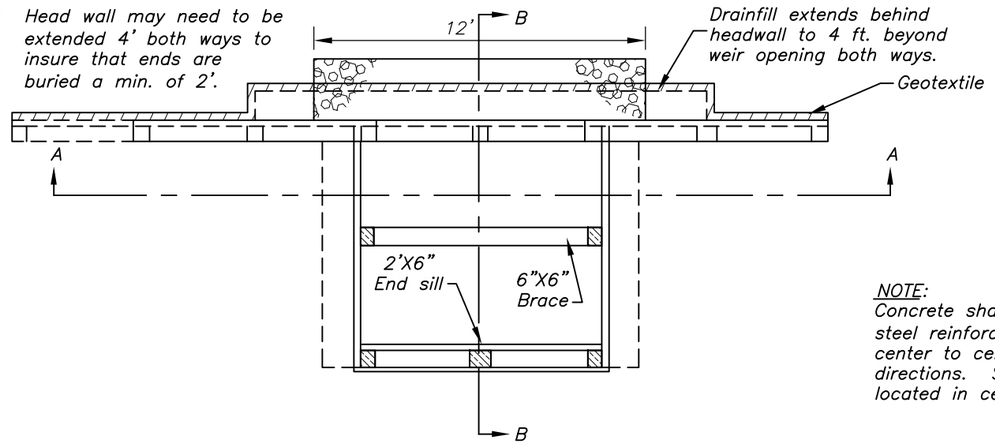

PLAN VIEW

NOTE:
Concrete shall have No. 4 steel reinforcing bars at 18" center to center in both directions. Steel to be located in center of slab.

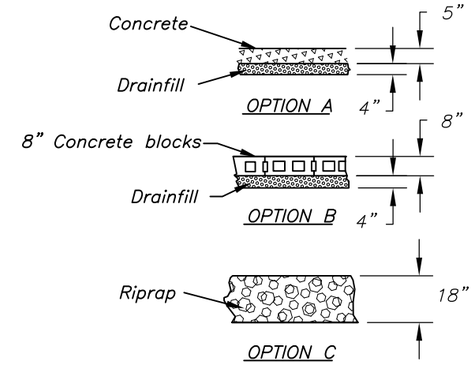

OPTIONAL FLOOR DETAILS

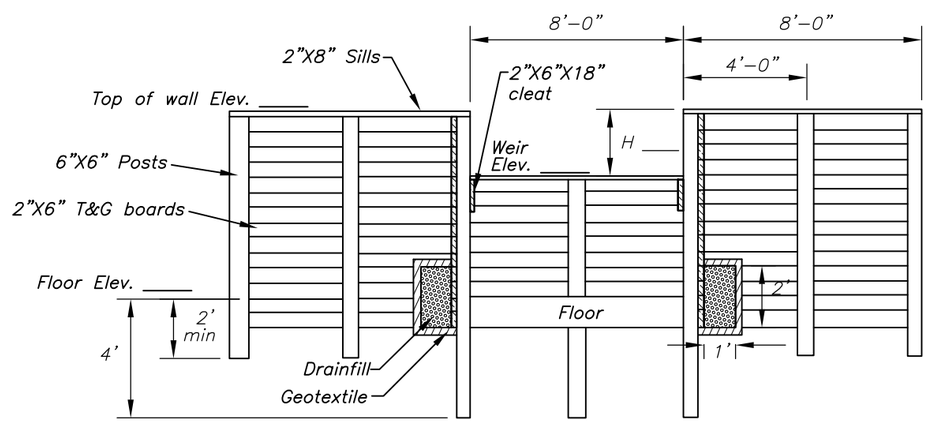

SECTION A–A

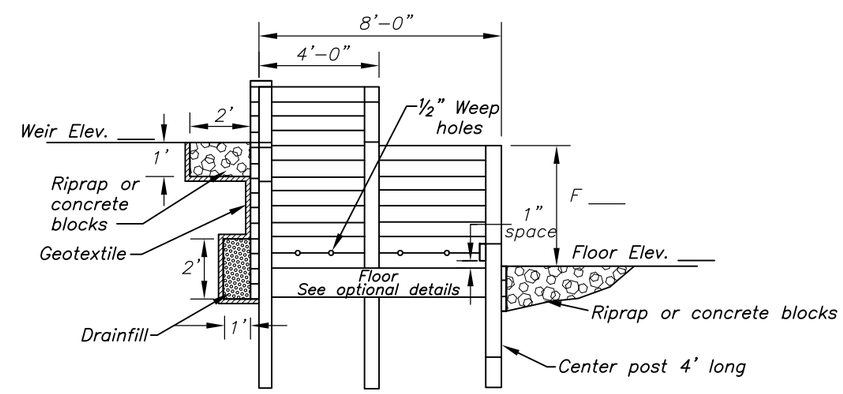

SECTION B–B

BILL OF MATERIALS	
Wood posts, 6"x6"x4"	each
Wood posts, 6"x6"x____"	each
Wood posts, 6"x6"x____"	each
Wood boards, 2"x6" tongue & groove	lin ft
Wood boards, 2"x8"x8"	each
Concrete, 6 bag mix	cu yds
Concrete block, 8"	each
Riprap	cu yds
Drainfill	cu yds
Nails, 6" ring, galvanized	lbs
Geotextile	sq yds

Adapted from Ohio Standard Drawing OH–N–309

DRAFT

NOT FOR CONSTRUCTION

Date

Designed

Drawn

Checked

Approved

TIMBER STRAIGHT DROP SPILLWAY

United States Department of Agriculture
NRCS
Natural Resources Conservation Service

File Name

Drawing Name
29–N–340

Sheet of

Revised 2/05

Toggle Draft Off