29N330

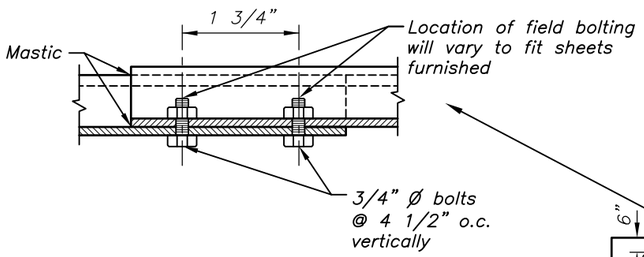

LAP DETAIL

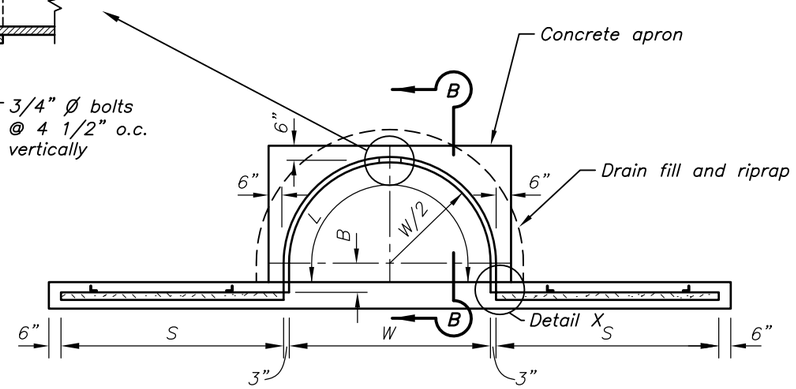

TOP VIEW

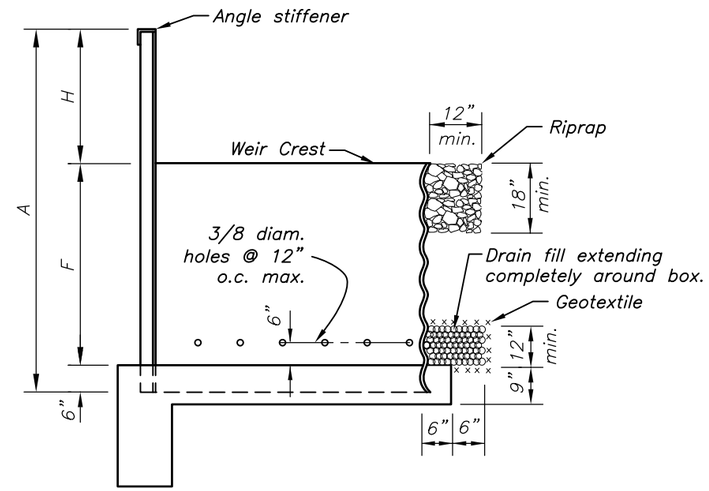

SECTION B–B

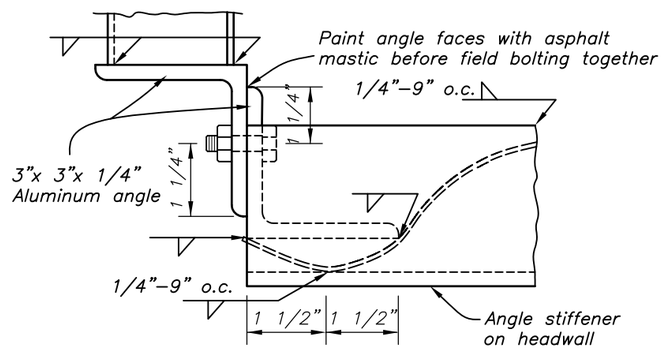

DETAIL X

TILE OUTLET STUB

Aluminum pipe shall be shop welded to structure for drain tile outlet when specified below:

____ "diam., 2' stub, required at

____ o'clock position, facing upstream, Bottom invert

____ ft. below weir crest

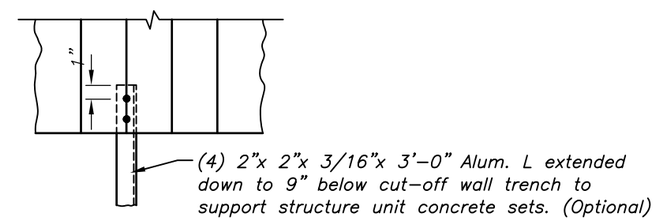

DETAIL A

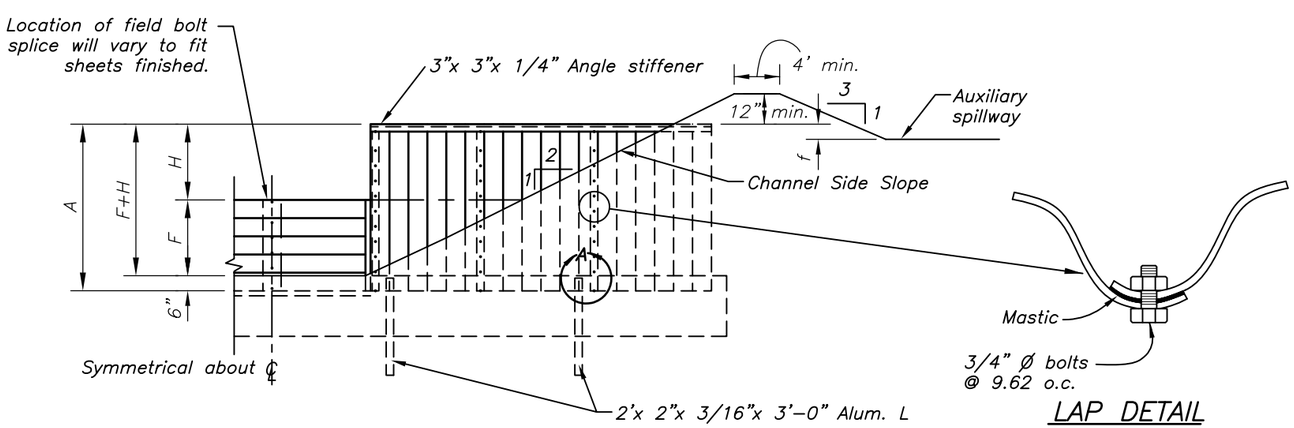

HALF DOWNSTREAM VIEW

LAP DETAIL

Revised 4/01

Sheet 3 of 3

Adapted from Michigan Standard Drawing 305

DRAFT

NOT FOR CONSTRUCTION

Date

Designed

Drawn

Checked

Approved

FABRICATED CORRUGATED ALUMINUM TOEWALL
DROP SPILLWAY
STRUCTURAL DETAILS

United States Department of Agriculture
NRCS
Natural Resources Conservation Service

File Name

Drawing Name
29–N–330

Sheet of

Toggle Draft Off