29N317

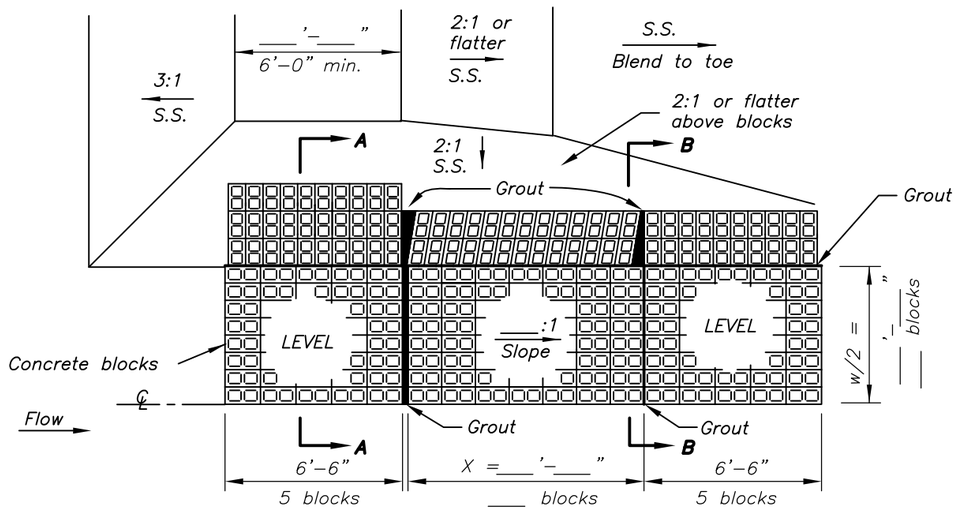

HALF PLAN

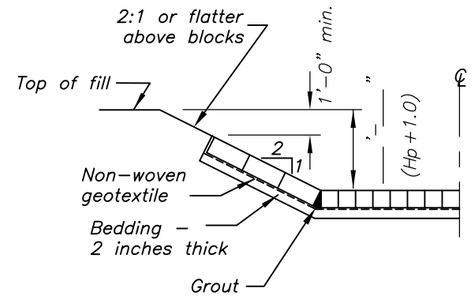

SECTION A–A

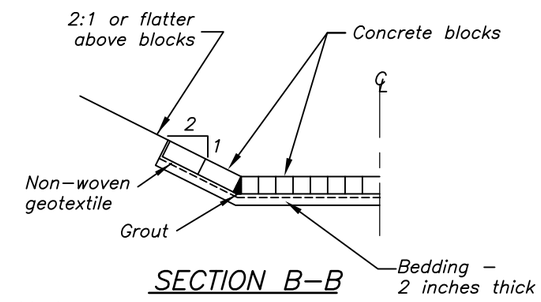

SECTION B–B

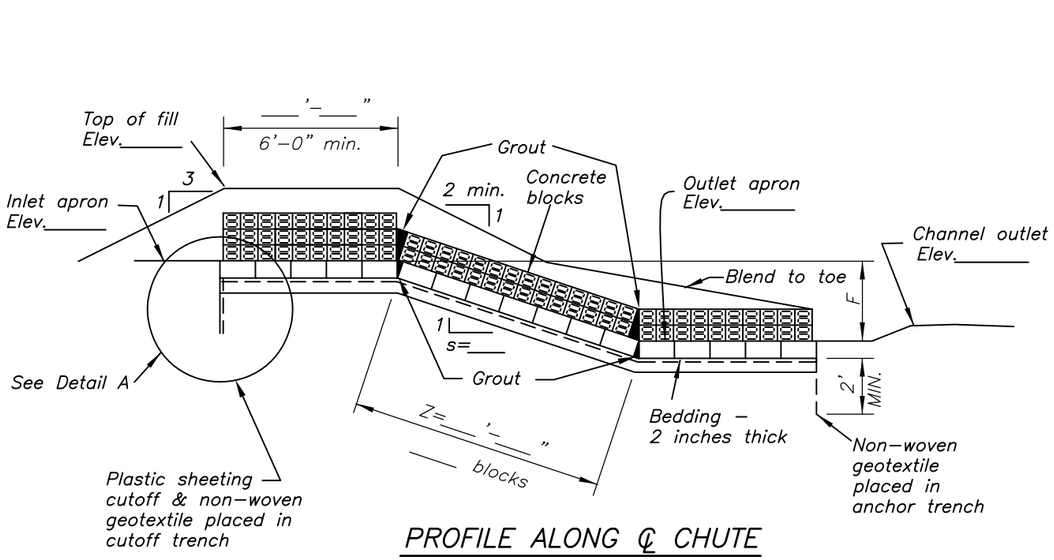

PROFILE ALONG ℄ CHUTE

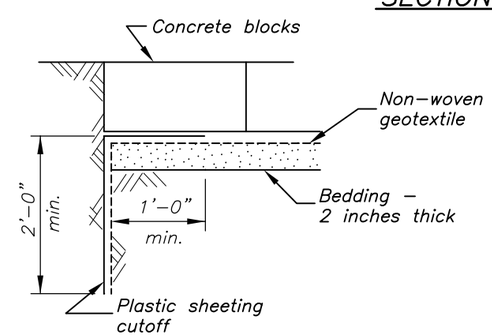

DETAIL A

NOT TO SCALE

Revised 5/00

Sheet 1 of 2

Adapted from Michigan
Standard Darwing SO–B–0790

DRAFT

NOT FOR
CONSTRUCTION

Date

Designed

Drawn

Checked

Approved

CONCRETE BLOCK CHUTE

United States Department of Agriculture
NRCS
Natural Resources Conservation Service

File Name

Drawing Name
29–N–317

Sheet of

Toggle Draft Off