29N303

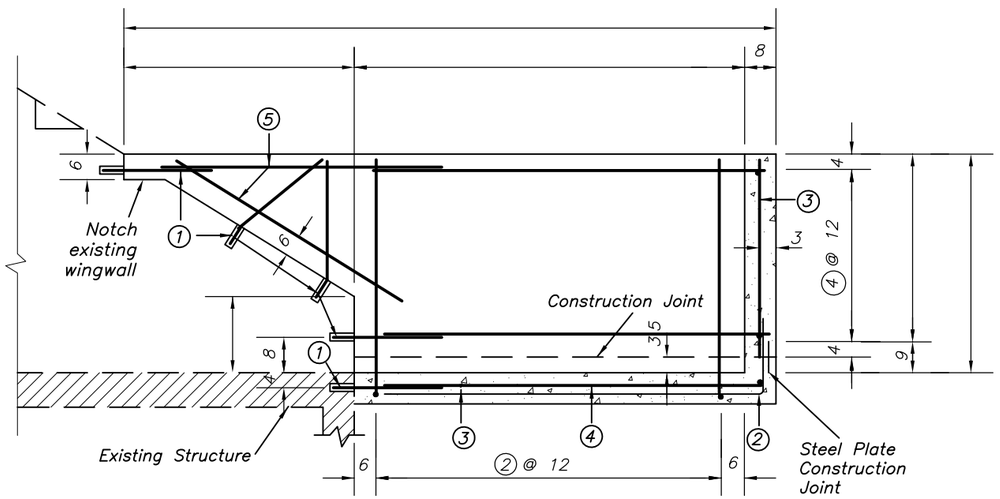

SECTION ON CENTERLINE

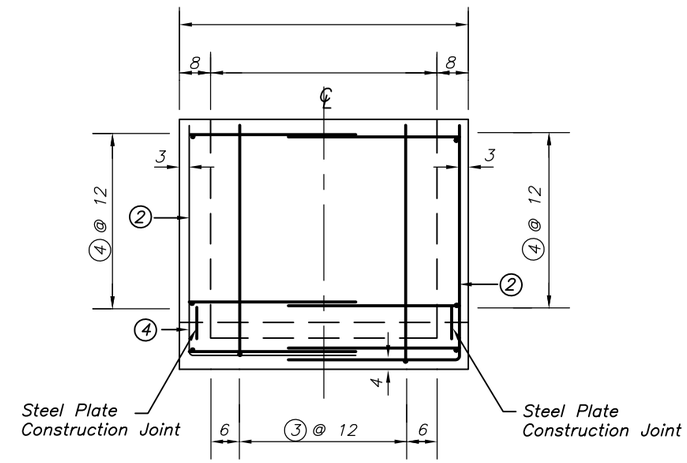

ENDWALL

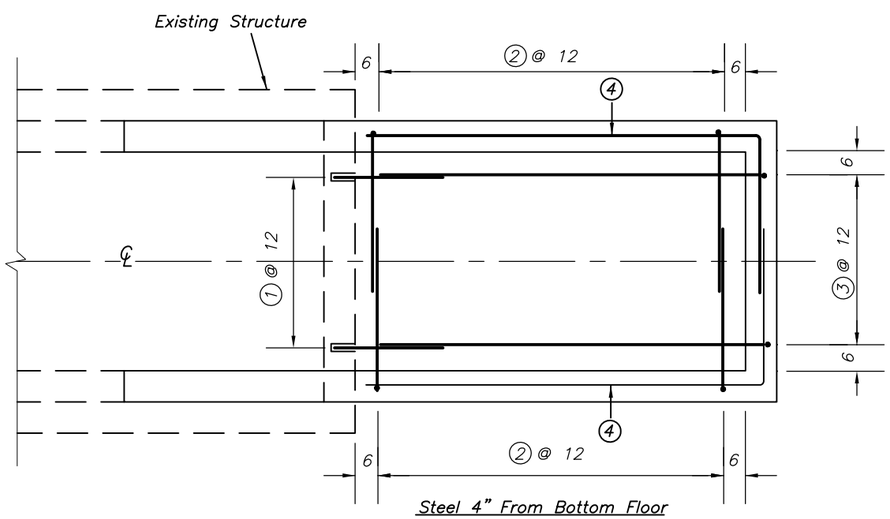

Steel 4" From Bottom Floor

PLAN

DRAFT

NOT FOR CONSTRUCTION

Date

Designed

Drawn

Checked

Approved

STANDARD HIGHWAY CULVERT BOX-INLET

United States Department of Agriculture Natural Resources Conservation Service

NRCS

File Name

Drawing Name 29-N-303

Sheet of

Rev. 9-97

Sh. 1 of 2

Toggle Draft Off