29N301

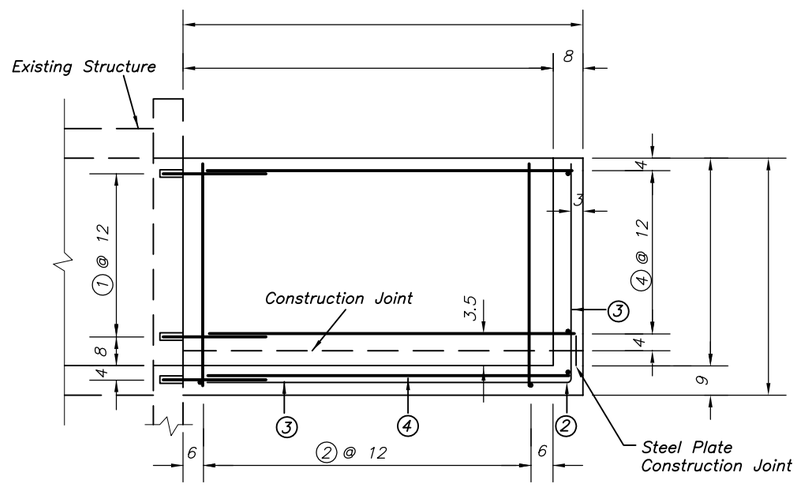

SECTION ON CENTERLINE

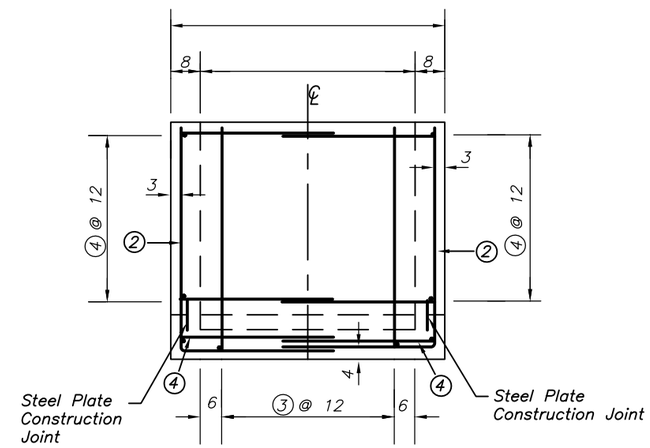

ENDWALL

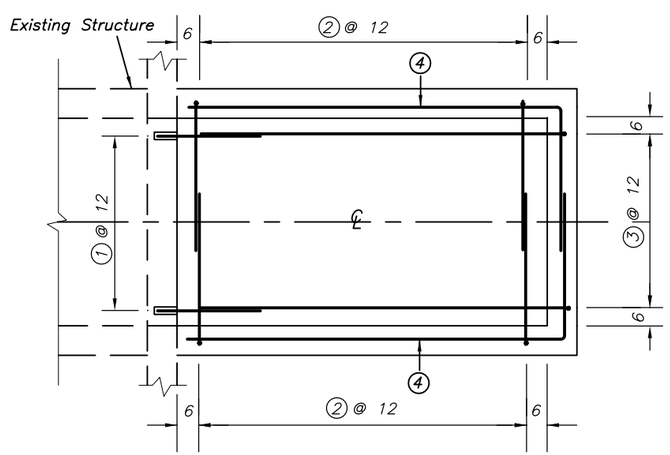

Steel 4" From Bottom of Floor

PLAN

Rev. 9–97

Sh. 1 of 2

DRAFT

NOT FOR CONSTRUCTION

Date

Designed

Drawn

Checked

Approved

STANDARD HIGHWAY CULVERT BOX–INLET

United States Department of Agriculture

NRCS Natural Resources Conservation Service

File Name

Drawing Name

29–N–301

Sheet of

Toggle Draft Off