29N300

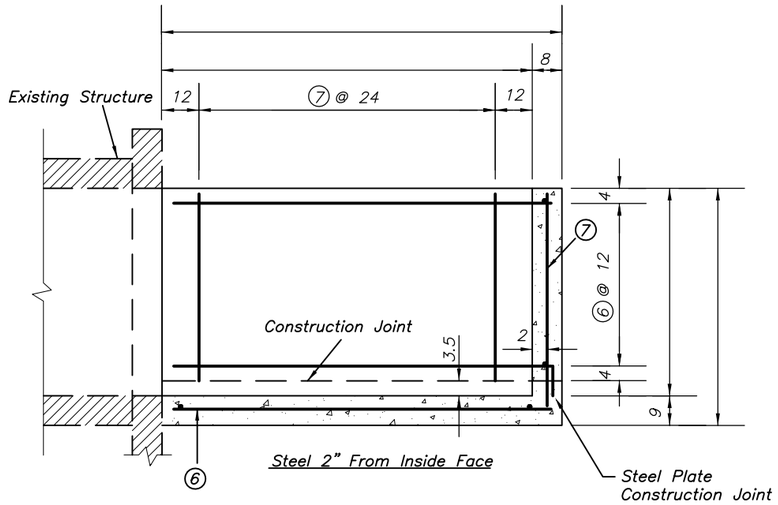

SECTION ON CENTERLINE

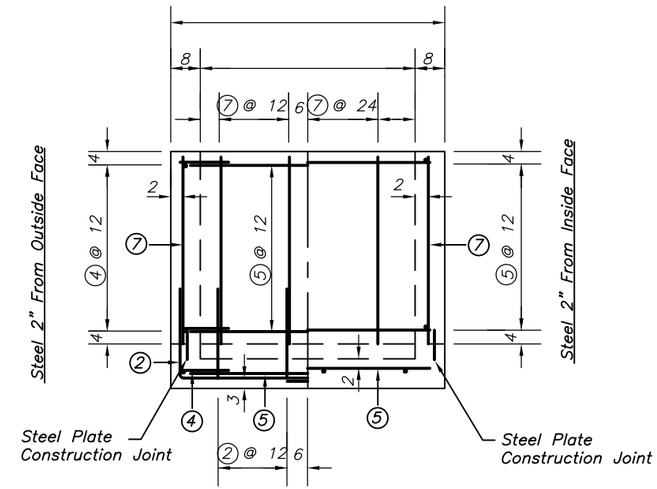

ENDWALL

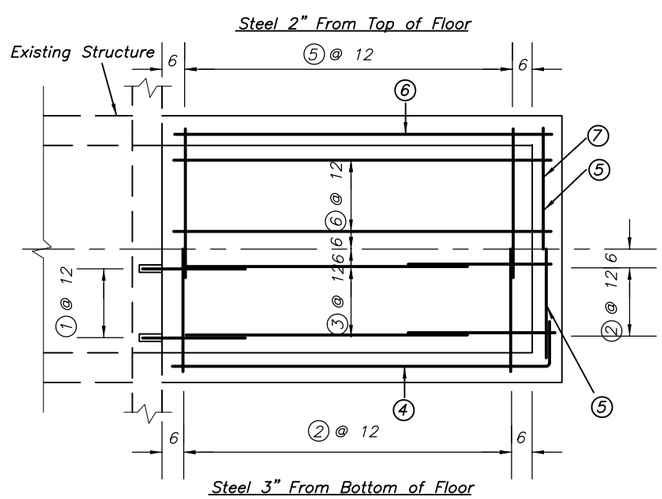

PLAN

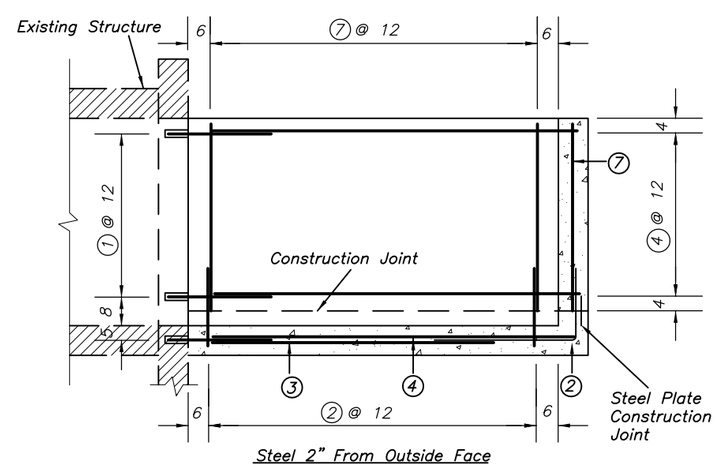

SECTION ON CENTERLINE

DRAFT

NOT FOR CONSTRUCTION

Date

Designed

Drawn

Checked

Approved

STANDARD HIGHWAY CULVERT BOX–INLET

United States Department of Agriculture
NRCS
Natural Resources Conservation Service

File Name

Drawing Name
29–N–300

Sheet of

Rev. 9–97

Sh. 1 of 2

Toggle Draft Off