29L244

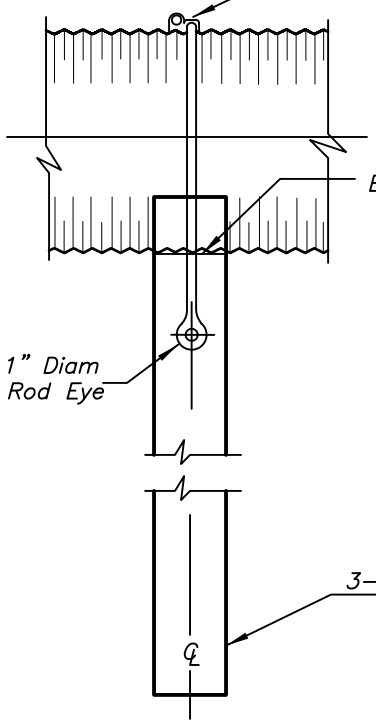

SIDE ELEVATION

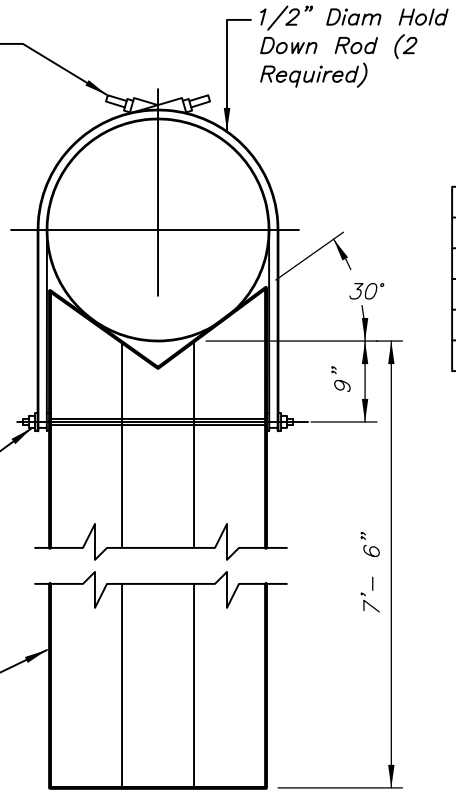

END ELEVATION

HOLD DOWN ROD DIMENSIONS	
Pipe Diam	Rod Length
(inches)	(inches)
36	65
42	72
48	80

NOTES:
For pipes larger than 18", the foundation shall be undercut 12" and backfilled with 12" of rock or equivalent. Rock shall be sound rock that has D_{50} size, varying from 2" to 6". Rock shall be well tamped and extend 12" all around the outlet support.

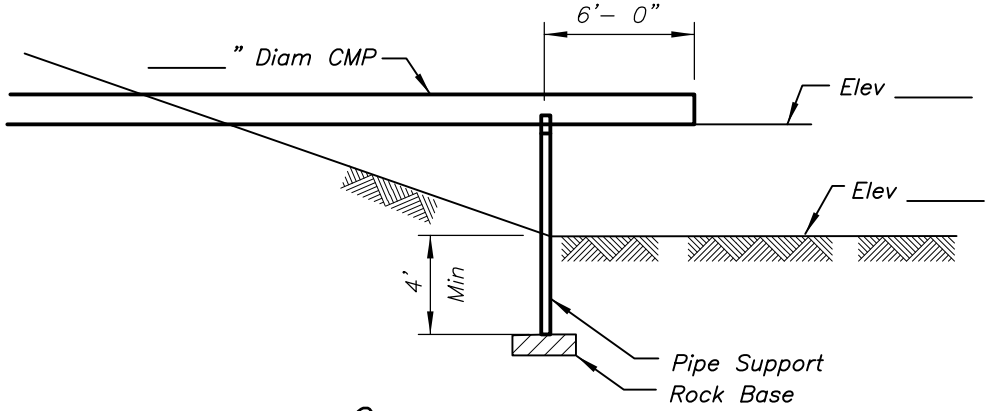

PROFILE ALONG ℄ OF OUTLET END OF PIPE

Revised 10/97

Adapted from Arkansas
Std. Drawing AR-ENG-210

DRAFT

NOT FOR
CONSTRUCTION

Date

Designed

Drawn

Checked

Approved

TIMBER PROP
FOR 36" - 48" DIAMETER PIPE

United States Department of Agriculture
NRCS
Natural Resources Conservation Service

File Name

Drawing Name
29-L-244

Sheet of

Toggle Draft Off