29N241

NOTES:

1. Toe plate, where needed, to be punched to match holes in skirt lip. 3/8" galv, bolts to be furnished. Length of toe plate is W+10" for 12" to 30" dia. pipe and W+22" for 36" to 60" dia. pipe.
2. Skirt section for 12" to 30" dia. pipe to be made in one piece.
3. Skirt section for 36" to 54" pipe to be made from two sheets joined by riveting or bolting on center line, 60" may be constructed in 3 pieces.
4. Connector section, corner plate and toe plate to be same sheet thickness as skirt.
5. End sections and fittings are to be galvanized steel or aluminum alloy for use with like pipe.
6. Where flared end sections are to be used with bituminous coated and paved metal pipe, they are to be galvanized only.

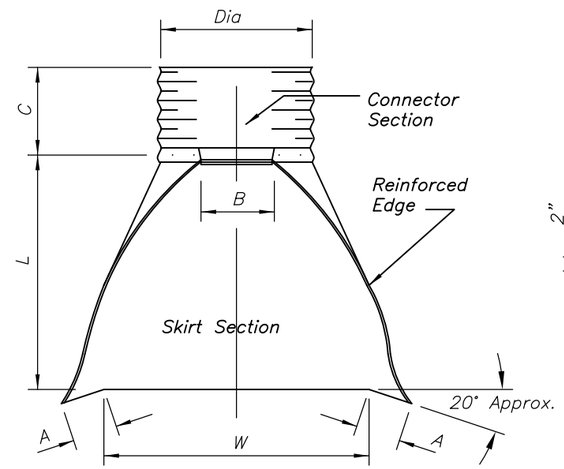

PLAN

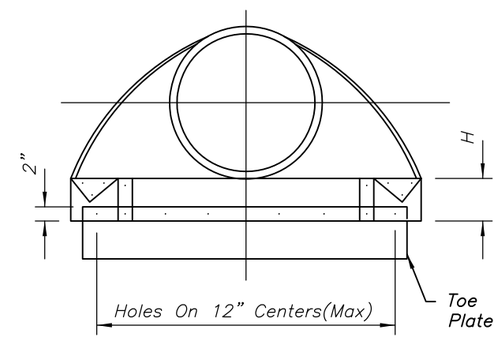

ELEVATION

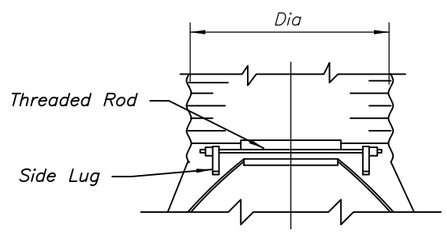

ALTERNATE CONNECTION

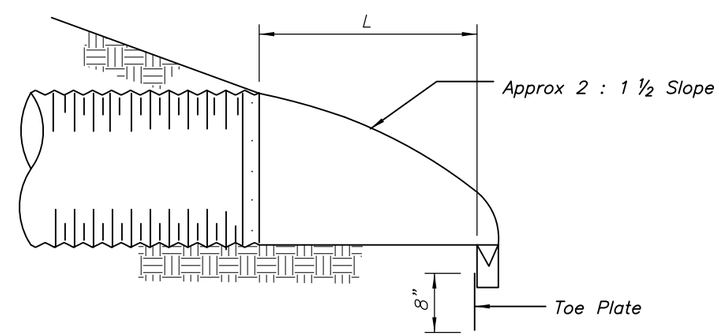

TYPICAL CROSS SECTION

PIPE DIA	SHEET THICKNESS	DIMENSIONS					
		A * 1"	B MAX	H * 1"	L * 1 1/2"	W * 2"	C
12"	.064"	6"	6"	6"	21"	24"	24"
15"	.064"	7"	8"	6"	26"	30"	24"
18"	.064"	8"	10"	6"	31"	36"	24"
24"	.064"	10"	13"	6"	41"	48"	24"
30"	.079"	12"	16"	8"	51"	60"	24"
36"	.079"	14"	19"	9"	60"	72"	36"
42"	.109"	16"	22"	11"	69"	84"	36"
48"	.109"	18"	27"	12"	78"	90"	36"
54"	.109"	18"	30"	12"	84"	102"	36"
60"	.109"–.138"	18"	33"	12"	87"	114"	36"

* = Tolerance

Rev. 10/97

Adapted from Arkansas Std. Drawing AR–ENG–203

DRAFT

NOT FOR CONSTRUCTION

Date

Designed

Drawn

Checked

Approved

CORRUGATED METAL CULVERT
FLARED END SECTION

United States Department of Agriculture
NRCS Natural Resources Conservation Service

File Name

Drawing Name
29–N–241

Sheet of

Toggle Draft Off