29L157B

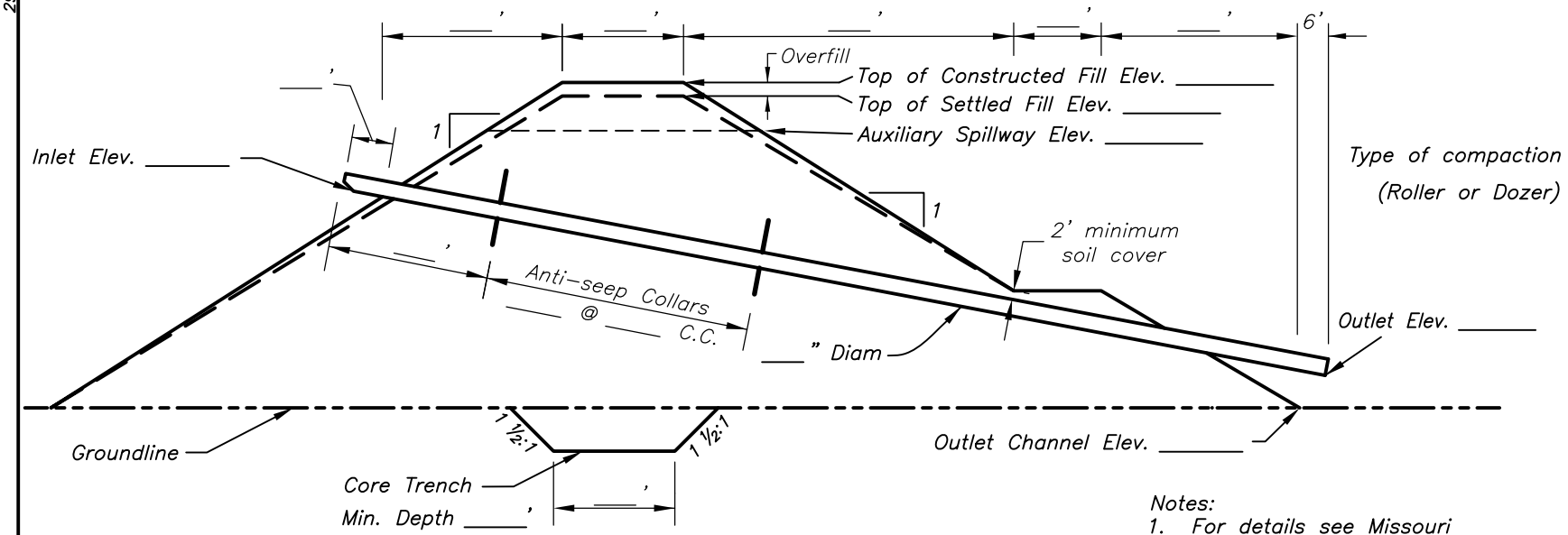

SECTION ALONG ℄ PRINCIPAL SPILLWAY

TBM NO. _____ Elev. _____ Description _____

Notes:

1. For details see Missouri Construction Specifications 378, Earth Dams and Pipe Spillway.
2. Additional principal spillway details are shown on attached drawings.
3. Locate auxiliary spillway on right, left or both ends of dam as shown on Plan View of Dam.
4. Overfill for settlement equals _____ x dam height at any given station.

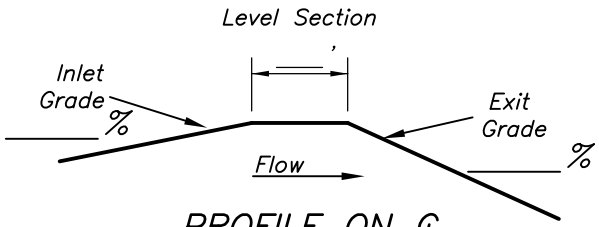

PROFILE ON ℄

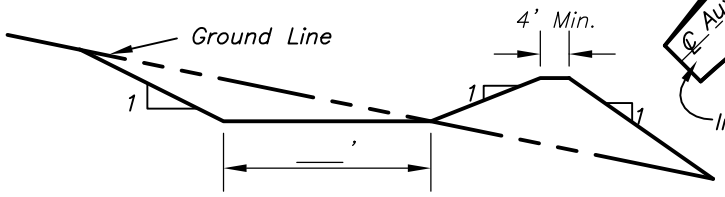

CROSS SECTION A–A

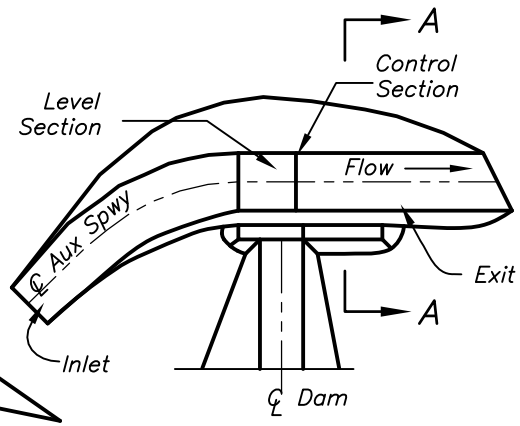

PLAN VIEW

AUXILIARY SPILLWAY

Revised 3/06

Not to Scale

DRAFT

NOT FOR CONSTRUCTION

Date

Designed

Drawn

Checked

Approved

EARTH DAM AND AUXILIARY SPILLWAYS HOOD OR CANOPY INLET PIPE WITH ELBOW

United States Department of Agriculture
NRCS Natural Resources Conservation Service

File Name

Drawing Name
29–L–157B

Sheet of

Toggle Draft Off