29L122C

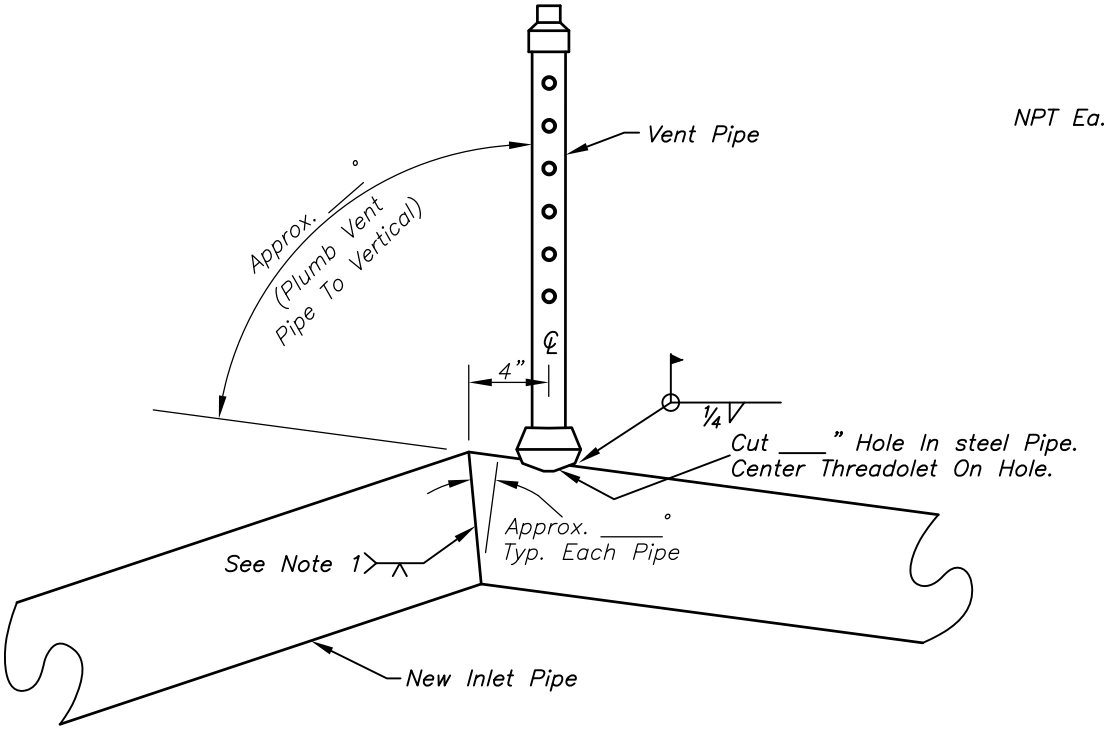

DETAIL – ASSEMBLY OF PIPE MITER AND VENT PIPE

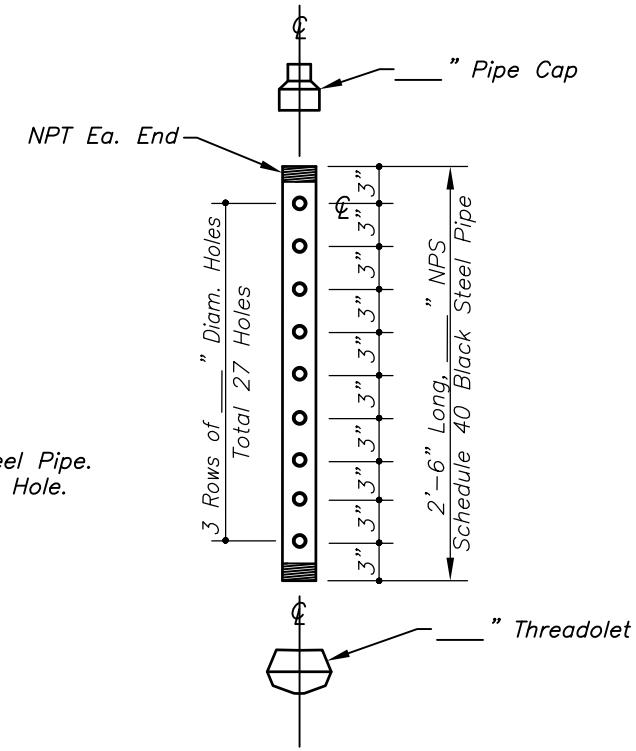

DETAIL – VENT PIPE

NOTES:

1. Pipe miter bend shall be shop fabricated. Bevel cut or grind each pipe end to a bevel angle of 30 degrees and a root face of 1/16" to 1/8". "V" formed by the bevel cuts shall be filled completely by the weld.
2. Vent pipe shall be attached in the field after final placement of the new inlet pipe. Plumb the vent pipe to a vertical position and weld into place. After assembly, tack weld threadolet and pipe cap to the vent pipe.

Prin. Spwy. Pipe Diam.	Vent Pipe NPS	Vent Hole Diam.
4"–18"	1 1/2"	1/2"
20"–30"	2 1/2"	3/4"
32"–40"	3"	1"

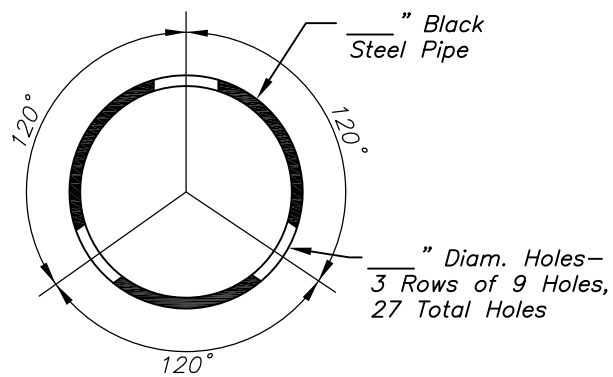

DETAIL – HOLE LOCATION VENT PIPE

9/07

Not to Scale

Landowner:

DRAFT

NOT FOR CONSTRUCTION

Date

Designed

Drawn

Checked

Approved

DETAILS OF PIPE MITER AND VENT PIPE ASSEMBLY BOTTOM WITHDRAWAL SPILLWAY

United States Department of Agriculture NRCS Natural Resources Conservation Service

File Name

Drawing Name 29–L–122C

Sheet of

Toggle Draft Off