29L83

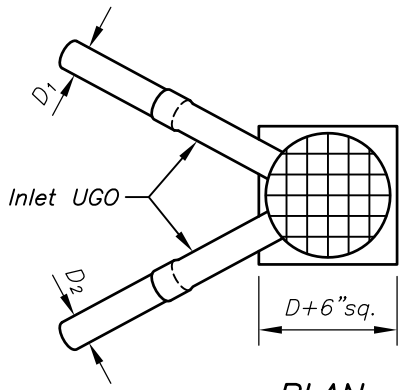

PLAN

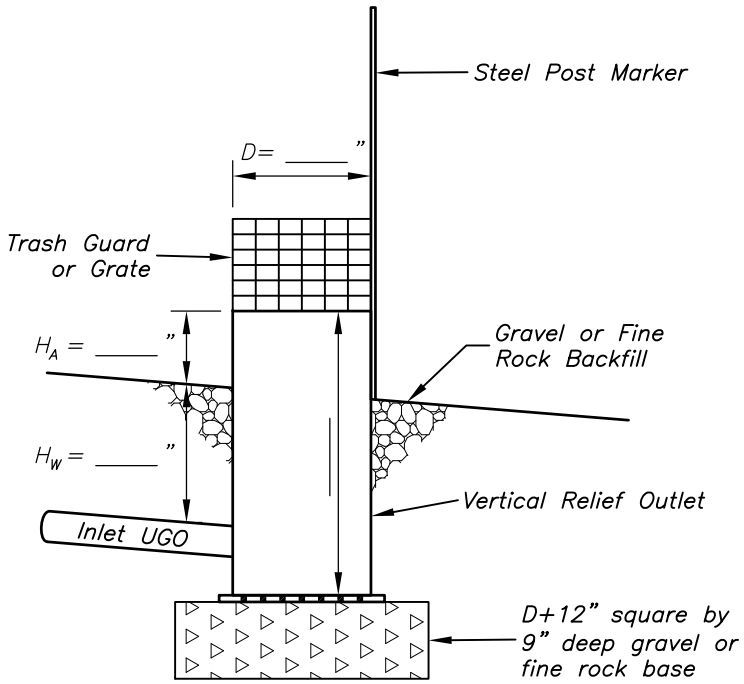

SIDE ELEVATION

____ Inlet UGOs required

D_1 = _____ inches

D_2 = _____ inches

D_3 = _____ inches

7/03

NOTES:

1. Relief outlet, underground outlets, underground inlets and trash guards will meet or exceed requirements of Missouri Material Specification 620 for underground outlet inlet. Materials for the vertical relief outlet may be smooth steel, corrugated metal pipe, PVC or corrugated polyethylene tubing with a smooth inside lining.
2. Gravel or fine rock will be used around the vertical relief outlet and as a base.
3. Perforated base plate will be made of the same material as riser. Perforations shall be 5/16 inch diameter. Hole spacing shall be on a grid approximately 3 inches center to center in either direction. Perforations are only required inside vertical relief outlet.
4. Inlet and outlet stubs will extend at least 2 feet from riser before joining UGO's.
5. Relief riser will be covered with suitable trash guard or grate as approved by NRCS.
6. If needed for support, vertical relief outlet shall be wired to steel post with corrosion resistant wire. For vertical relief outlets that are flush with the ground and have a grate type trash rack, the steel post marker is not required.
7. The vertical relief outlet extending above the ground may be perforated with Dx5 number of 1" diameter holes per foot exposed.
8. The size of the vertical relief outlet shall be equal to the next pipe size larger for single inlets and a minimum of 1 ½ times the area of all UGO's for multiple inlets.

$D(\text{Multiple inlet}) = [1.5(D_1^2+D_2^2+D_3^2+\ldots)]^{1/2}$ = _____ = "use _____ "

D(Single inlet) = _____

Landowner:

DRAFT

NOT FOR CONSTRUCTION

Date

Designed

Drawn

Checked

Approved

UGO VERTICAL RELIEF OUTLET WITHOUT OUTLET PIPE

United States Department of Agriculture
NRCS Natural Resources Conservation Service

File Name

Drawing Name
29-L-83

Sheet of

Toggle Draft Off