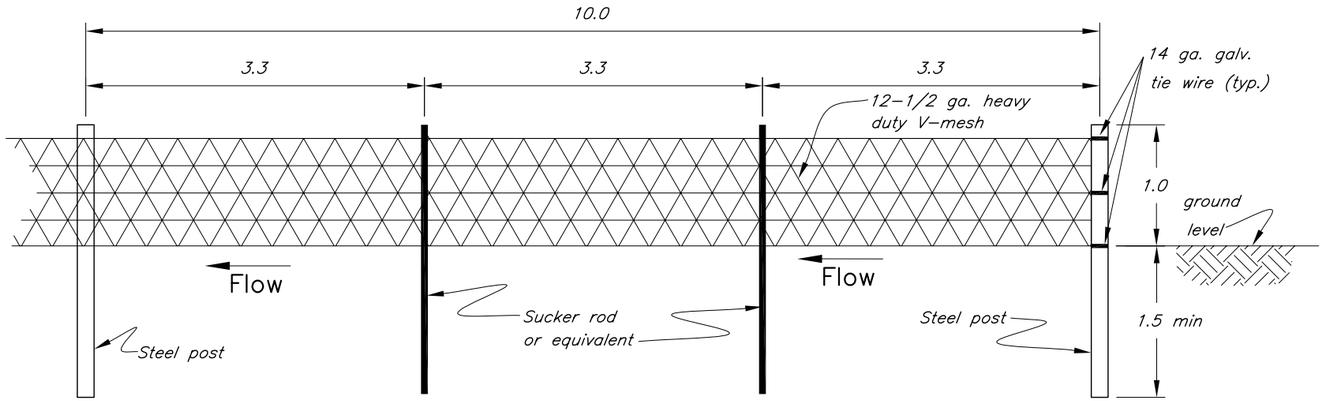

TYPICAL V-MESH SPREADER

Not to Scale

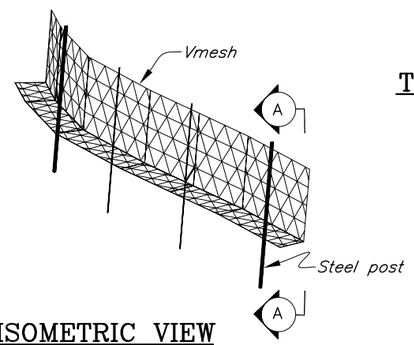

ISOMETRIC VIEW

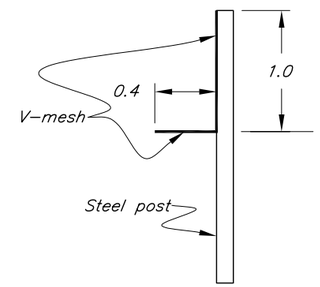

SECTION A-A

DESIGN AND INSTALLATION GUIDELINES

1. The purpose of V Mesh Spreaders is to prevent concentration of runoff from causing rills, gullies, and headcuts. The spreader acts to slow the runoff, spread it over a larger area, and release it through the wire mesh openings at a slower, non-erosive rate. Spreaders can be used to:
   - --Stabilize the flow from emergency spillways
   - --Stabilize headcuts by rerouting flow
   - --Prevent concentration and channeling of runoff from roads, kickouts, etc.
   - --Prevent concentration of flow on rangelands and forestlands

   Spreaders induce vegetative growth by increasing the infiltration of runoff into the ground.
2. Height of wire can vary from 1-2 ft.
3. Selection of the proper grade is the critical design parameter. The grade along the alignment can vary from 0-4% (0-4 ft. per 100 ft.)

   A. When crossing the draw, the alignment grade is at least 1/2 of draw slope.

   B. When the cross slope is 2% or greater, the grade shall not exceed 1/2 of the cross slope, once the alignment is out of the draw.

   C. When picking up water from emergency spillways, diversions, grassy draws, or swales, the grade must be sufficient to prevent silt buildup but catches trash. It is critical to have an accurate staked alignment.

   D. For the first 50 to 100 feet of spreader, it is common in the mountain areas to begin with a grade of 2-3 ft. per 100 ft., then 0.5 ft. per 100 ft., then end with 0 ft. per 100 ft.
4. When used for emergency spillways, the top of the spreader shall be 0.5 ft. lower than the crest of the spillway.
5. Spreaders shall not be installed on sandy soils which produce a lot of sediment or are subject to wind erosion.
6. Errors in staking and/or construction can usually be corrected by pulling up the spreader intact and changing the grade.
7. When crossing a dip, rill, or concentrated flow area, the spreader needs to be strengthened by rocks (or equivalent) on the downslope side, by increasing the "away" grade, and/or increase the height of spreader wire and posts through the low area in order to keep the top of the spreader level.
8. For drainage areas less than 200 acres.

JOB NO. _____ Location: _____ Draw Slope: _____ (%)

Station	HI	FS	Grade (%)	Remarks

Layout Date _____

Construction Date _____

JOB NO. _____ Location: _____ Draw Slope: _____ (%)

Station	HI	FS	Grade (%)	Remarks

Layout Date _____

Construction Date _____

JOB NO. _____ Location: _____ Draw Slope: _____ (%)

Station	HI	FS	Grade (%)	Remarks

Layout Date _____

Construction Date _____

This job meets N.R.C.S. Standards and Specifications _____ Contractor / Owner _____ Date

NRCS accepts this work for payment. _____ Date

Date

Designed _____

Drawn _____

Checked _____

Approved _____

V-MESH SPREADER

COOPERTATOR _____ FIELD OFFICE _____

STATE _____ COUNTY _____ NRCD _____

NRCS Natural Resources Conservation Service

File No. 95001_VMESH.dwg

Drawing No. 95001

Sheet 01 of 02

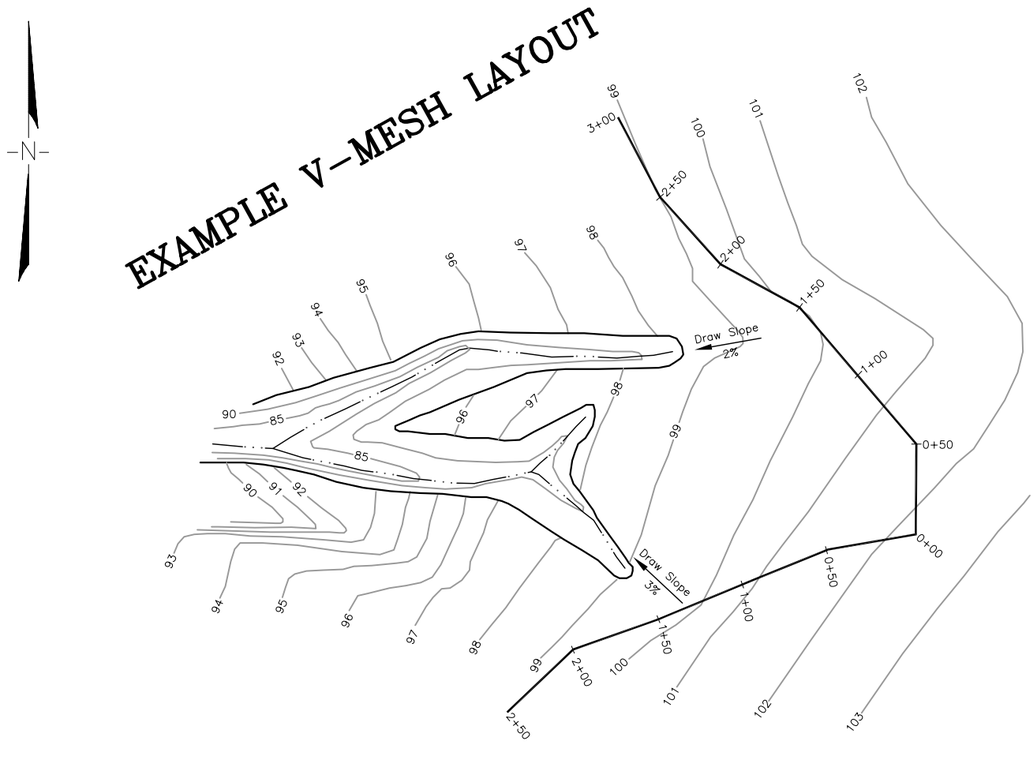

PLAN VIEW

Not to Scale

EXAMPLE V-MESH LAYOUT

JOB NO. I1-1

Location: Sec T. R.
Lat N
Long E

Draw Slope: (%) 2% North / 3% South

Station	HI	FS	Grade (%)	Remarks
0+00				NORTH V-MESH
0+50				
1+50				
2+00				
2+50				
3+00				
0+00				SOUTH V-MESH
0+50				
1+00				
1+50				
2+00				
2+50				

(Hand level: SYard)

Layout Date _____

Construction Date _____

JOB NO. _____ Location: _____ Draw Slope: (%) _____

Station	HI	FS	Grade (%)	Remarks

Layout Date _____

Construction Date _____

JOB NO. _____ Location: _____ Draw Slope: (%) _____

Station	HI	FS	Grade (%)	Remarks

Layout Date _____

Construction Date _____

JOB NO. _____ Location: _____ Draw Slope: (%) _____

Station	HI	FS	Grade (%)	Remarks

Layout Date _____

Construction Date _____

Date

Designed _____

Drawn _____

Checked _____

Approved _____

V-MESH SPREADER

FIELD OFFICE _____

COOPERTATOR _____

COUNTY _____

STATE _____

NRCS
Natural Resources Conservation Service

File No.
95001_VMESH.dwg

Drawing No.
95001

Sheet 02 of 02