PERTINENT DATA: 1. BOULDER SIZE _____ INCHES

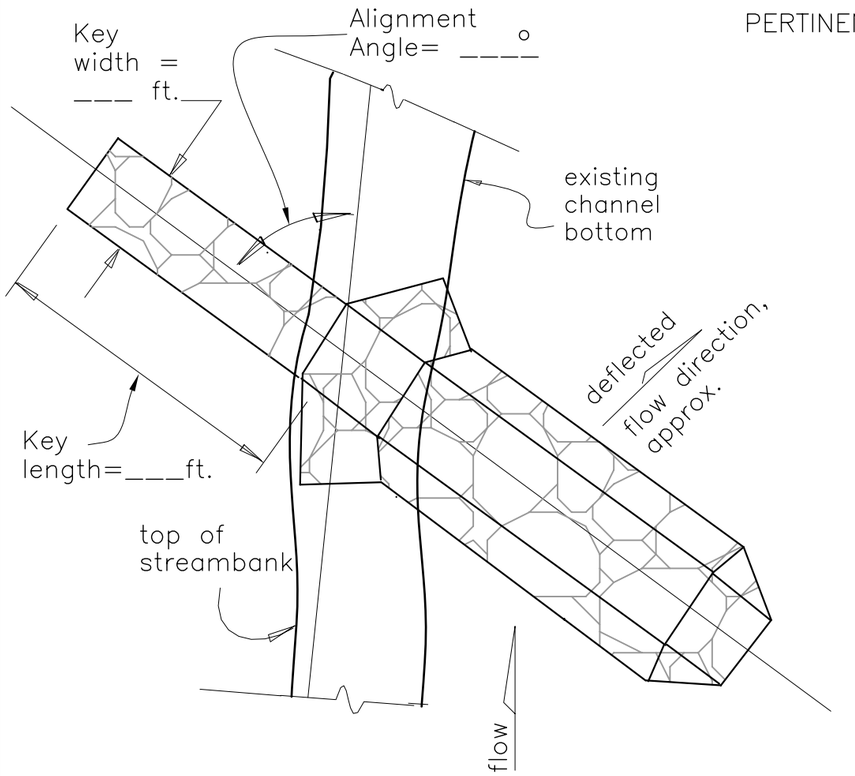

PLAN VIEW
NOT TO SCALE

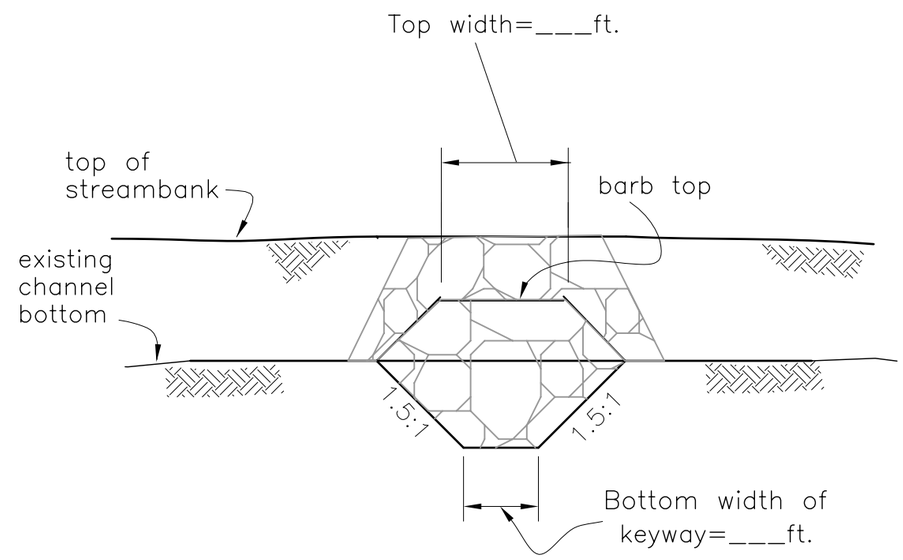

END VIEW

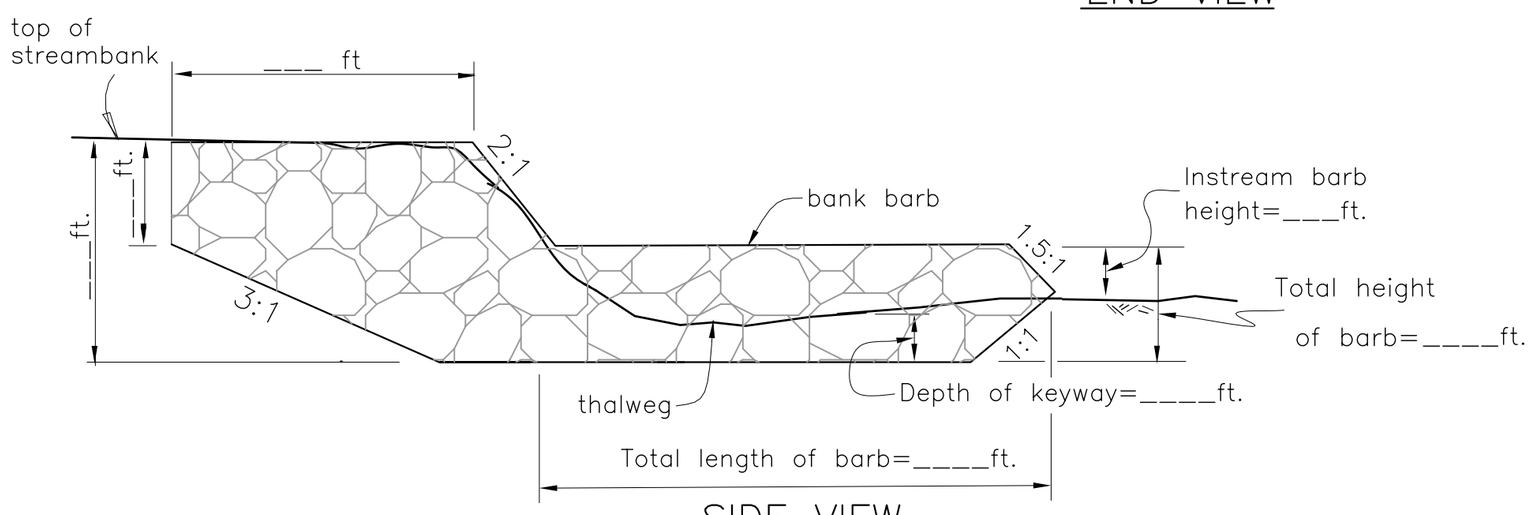

SIDE VIEW

NOTES

1. Specification for Rock Riprap and Bank Shaping shall apply.

2. Rock riprap shall conform to the following gradation:

Size Opening (inches)	% Passing Dry Wt. Basis
_____	100
_____	55 – 85
_____	45 – 65
_____	30 – 60
_____	10 – 25
_____	0 – 15

3. Vegetate as follows:

4. Quantity Estimate

Excavation _____ cy

Fill _____ cy

Bedding _____ cy

Riprap _____ cy

DESIGN ASSUMPTIONS

1. **The streambank height is less than 10 feet.**

Date

Designed

Drawn

Checked

Approved

STANDARD

BANK BARB

COUNTY, STATE

NRCS Natural Resources Conservation Service

File No. 02007_BankBarb.dwg

Drawing No. 02007

Sheet 01 of 01