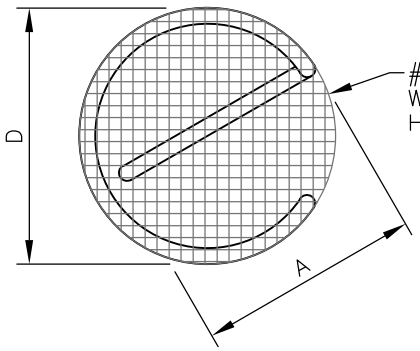

SECTION A/1 1
NO SCALE

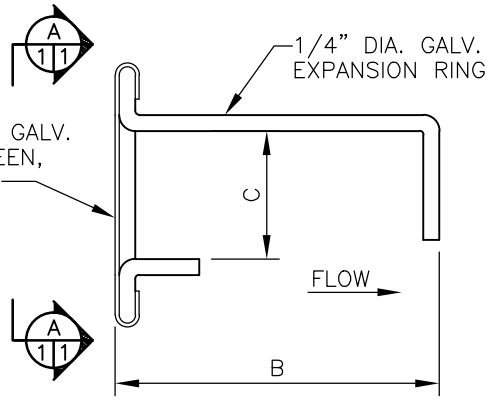

ELEVATION
NO SCALE

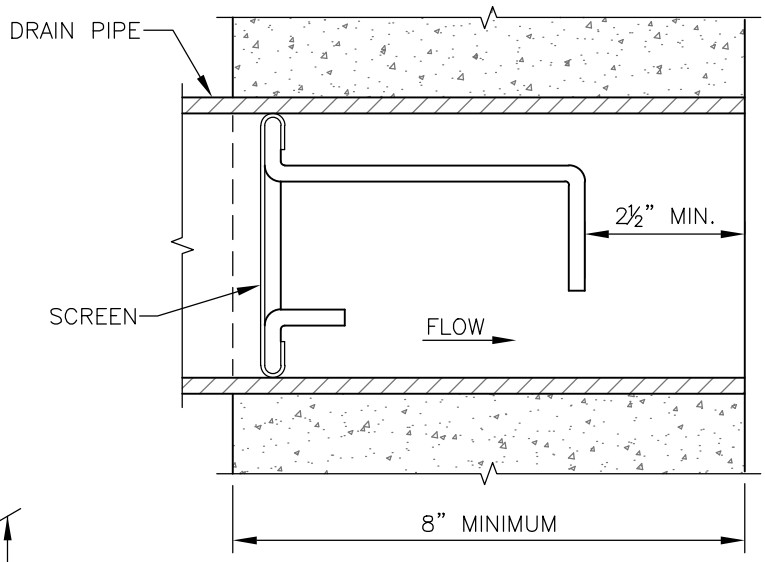

ELEVATION
NO SCALE

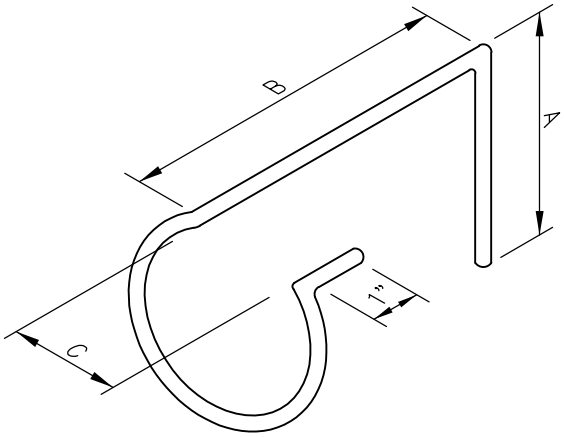

ANIMAL GUARD ISOMETRIC
NO SCALE

DIMENSION TABLE

PIPE DIAMETER	A	B	C	D
4 INCHES	3½"	5"	2"	4"
6 INCHES	5½"	5"	2½"	6"
8 INCHES	7½"	5"	3"	8"

NOTES

1. STANDARDIZED DESIGNS – MUST BE ADAPTED TO THE SPECIFIC SITE.
2. METALWORK SHALL CONFORM TO THE REQUIREMENTS OF CONSTRUCTION SPECIFICATION 81, METAL FABRICATION AND INSTALLATION OR ENGINEERING STANDARD AND SPECIFICATIONS 587, STRUCTURE FOR WATER CONTROL.

NRCS
Natural Resources Conservation Service
United States Department of Agriculture

ANIMAL GUARD

(REVISED LAST ON 12–10)

		Date
Designed	REJ	05–77
Drawn	DDD	12–10
Checked		
Approved	J.E. ANDREWS S.C.E.	12–10

File Name

Drawing Name
CO–SSP–55

Sheet 1 of 1