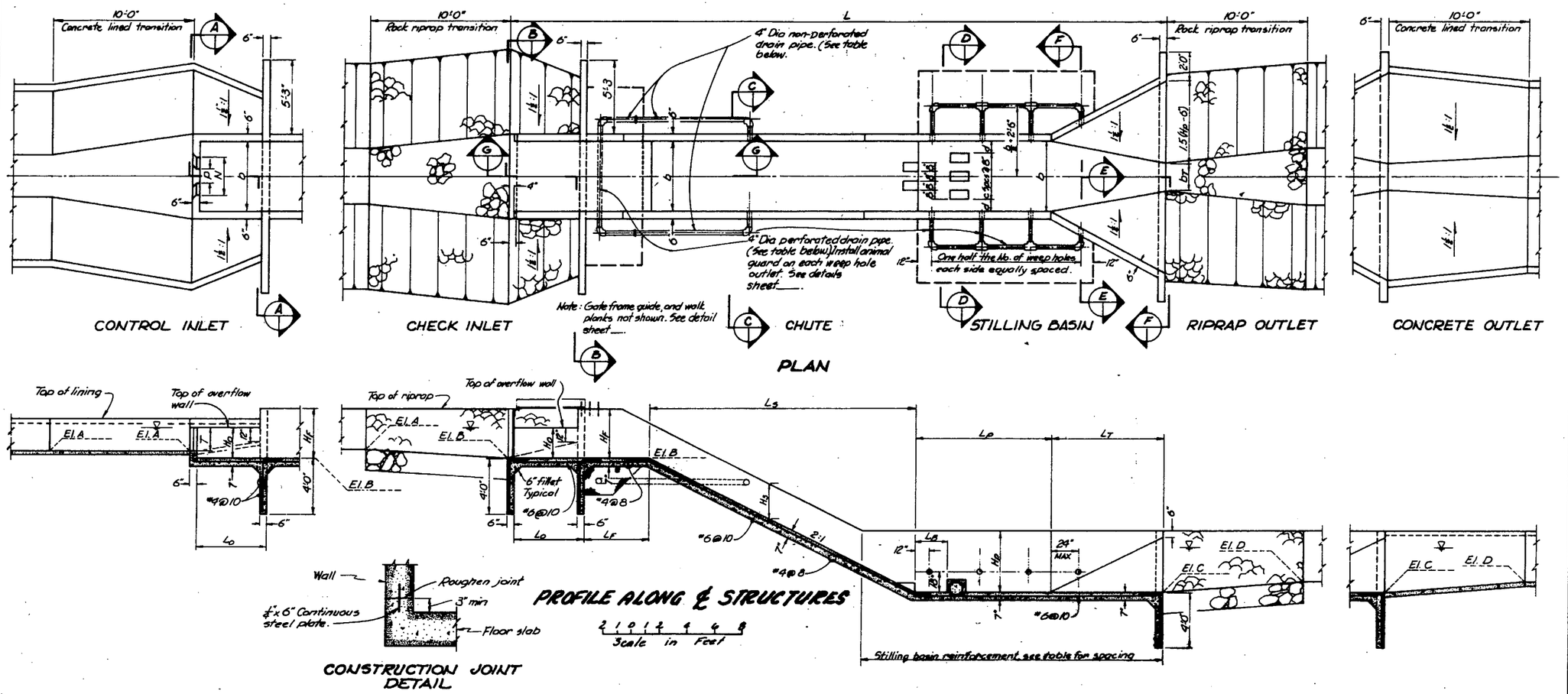

STRUCT. No.	WATER-WAY	STATION	Q	INLET	ELEVATIONS A	B	C	D	DIMENSIONS a	b	c	d	h	L	L_B	L_F	L_O	L_P	L_S	L_T	H_F	H_O	H_P	H_S	b_T	CONTROL INLET N	P	T	CHECK INLET SLIDE GATE (WIDTH X HEIGHT) *	FRM. HT.	No. OF WALK PLANKS	STILLING BASIN REINF. TRANSV. REINF.	LONGIT. REINF. FLOOR	WALLS	QUANTITIES CONC. (Cu. Yd.)	REINF. STEEL (Lbs.) #4	#5	#6	#7	No. OF WEEP HOLES	REMARKS

* When a gate with a specified height is not available, a gate with next greater available height shall be used with appropriate frame height.

APPROVED DRAIN PIPE ALTERNATES

TYPE OF PIPE	CLASS	REFERENCE SPECIFICATION ASTM	SCS WEST
ASBESTOS CEMENT	S 2400	C 644	545

	ASTM SPECIFICATION PIPE	SDR	FITTINGS	PERFORATIONS
PVC PLASTIC PIPE SCHEDULE 40, 80 & 120	D1785		D2466 D2467	C508
PVC PLASTIC PIPE	D2841	232.5	D2466 D2467	C508
PVC SEWER PIPE & FITTINGS	D3034	232.5	D3034	C508

General Notes.

1. Elevations are in feet above mean sea level datum.
2. All stationing refers to the center lines of the structures and is the measured horizontal distance.
3. STANDARDIZED DESIGNS - Must Be Adapted To The Specific Site.

Structural Notes.

1. All concrete for structures shall be class 4,000.
2. All bar splices shall be lapped a minimum of 30 diameters of the smaller bar being spliced.
3. Indicated reinforcing bar spacing is center to center of bars
4. Single layers of reinforcing steel shall be placed in the center of the section unless otherwise dimensioned.
5. All exposed edges of the concrete shall be chamfered ¾ inches
6. A construction joint shall be used in the wall slightly above the floor slab. (See detail)

Re: "Design of Small Canal Structures" U.S. Bureau of Reclamation.

COLORADO STATE STANDARD RECTANGULAR INCLINED DROP CO-SSP-62 1 of 4 Sheets.

U. S. DEPARTMENT OF AGRICULTURE
SOIL CONSERVATION SERVICE

	Date		
Designed J.H.D.	6-77	Approved by [signature]	
Drawn J.D.L.	11-77	Title State Cons. Engr.	
Traced		Title	
Checked CRH, JHD	11-78	Sheet No. of	Drawing No.

SCS-ENG-313-B Rev. 7-69

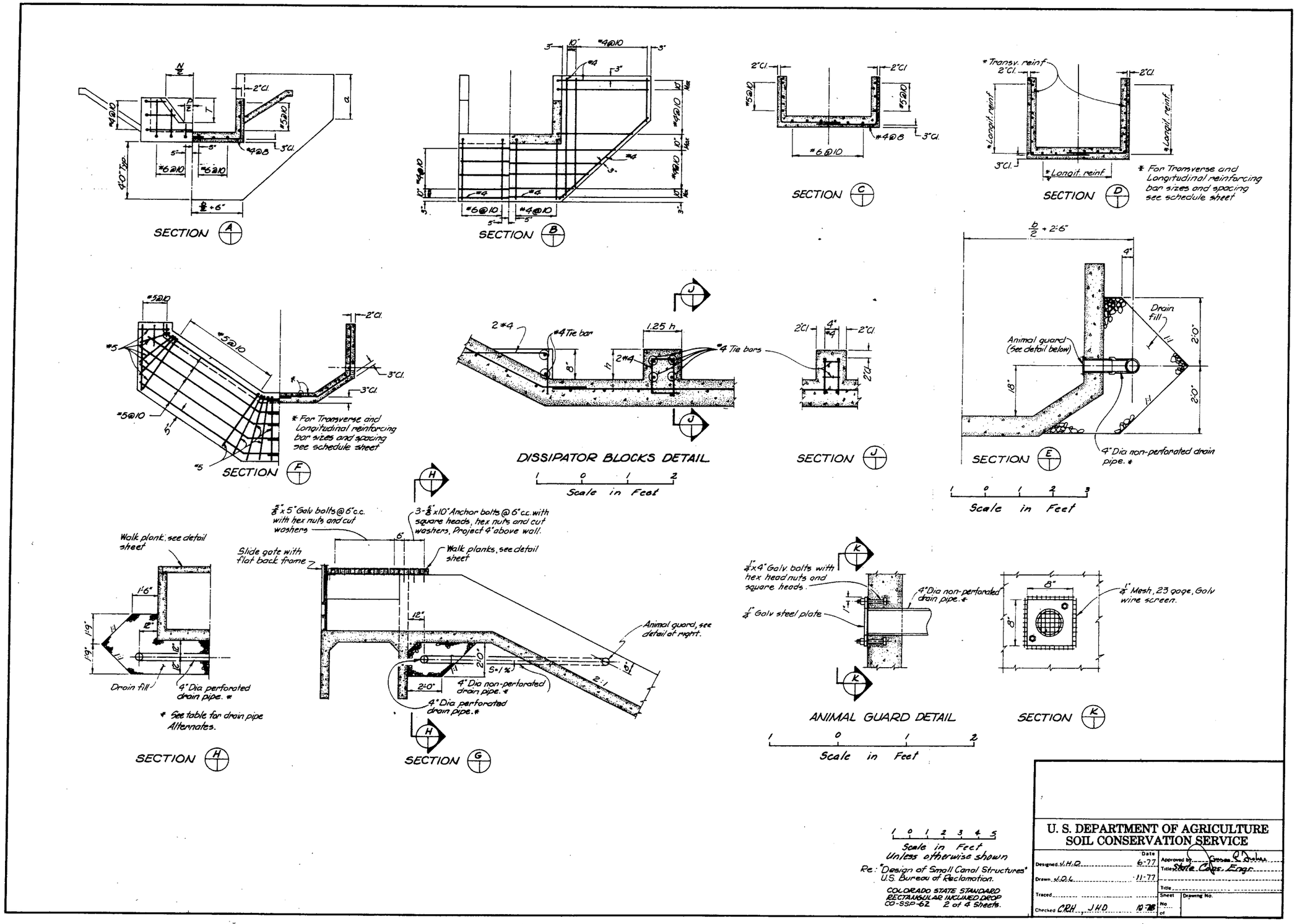
SECTION A
SECTION B
SECTION C
SECTION D
* Transv. reinf
* Longit. reinf
* For Transverse and Longitudinal reinforcing bar sizes and spacing see schedule sheet
SECTION E
Drain fill
Animal guard (See detail below)
4" Dia non-perforated drain pipe. *
Scale in Feet
SECTION F
* For Transverse and Longitudinal reinforcing bar sizes and spacing see schedule sheet
DISSIPATOR BLOCKS DETAIL
Scale in Feet
SECTION J
SECTION H
Walk plank, see detail sheet
Drain fill
4" Dia perforated drain pipe. *
* See table for drain pipe Alternates.
SECTION G
3/8" x 5" Galv bolts @ 6" c.c. with hex nuts and cut washers
3-5/8" x 10" Anchor bolts @ 6" c.c. with square heads, hex nuts and cut washers, Project 4" above wall.
Slide gate with flat back frame
Walk planks, see detail sheet
Animal guard, see detail at right.
4" Dia non-perforated drain pipe. *
4" Dia perforated drain pipe. *
ANIMAL GUARD DETAIL
Scale in Feet
1/4" x 4" Galv. bolts with hex head nuts and square heads.
1/4" Galv steel plate
4" Dia non-perforated drain pipe. *
1/4" Mesh, 23 gage, Galv wire screen.
SECTION K
Scale in Feet
Unless otherwise shown
Re: "Design of Small Canal Structures" U.S. Bureau of Reclamation.
COLORADO STATE STANDARD RECTANGULAR INCLINED DROP CO-SSP-62 2 of 4 Sheets.
U. S. DEPARTMENT OF AGRICULTURE
SOIL CONSERVATION SERVICE
Designed J.H.D. 6-77
Drawn J.D.L. 11-77
Traced
Checked CRH, JHD 10-78
Approved by
Title State Cons. Engr.
Title
Sheet No. of
Drawing No.

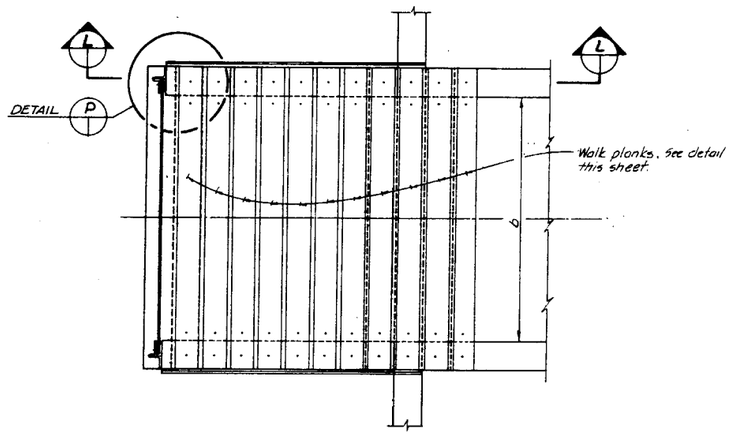

PLAN OF WALK PLANKS

1 0 1 2 3
Scale in Feet

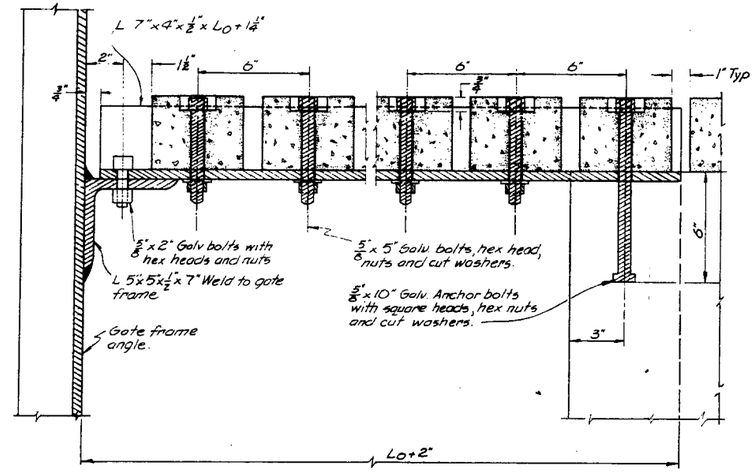

SECTION THRU WALK PLANKS

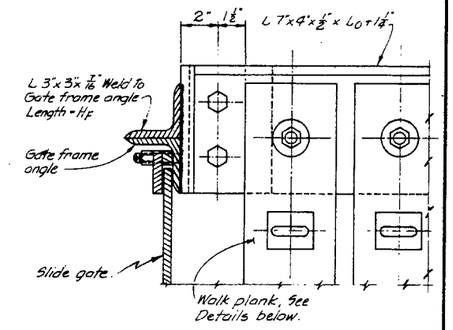

DETAIL P

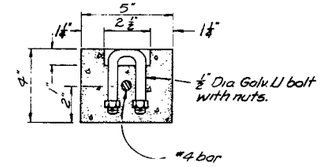

SECTION N

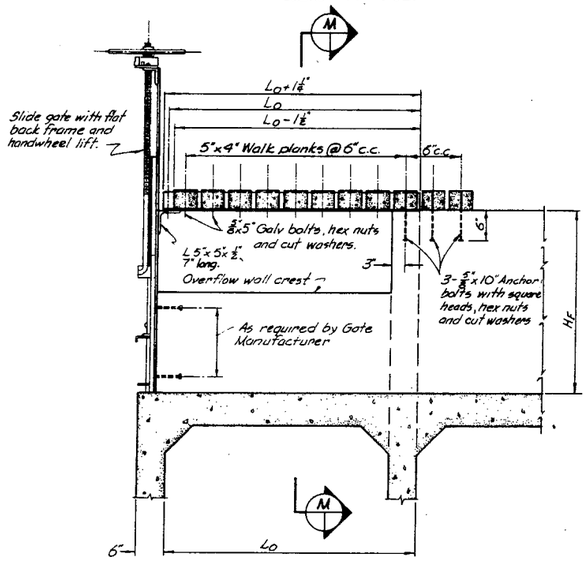

SECTION L

1 0 1 2 3
Scale in Feet

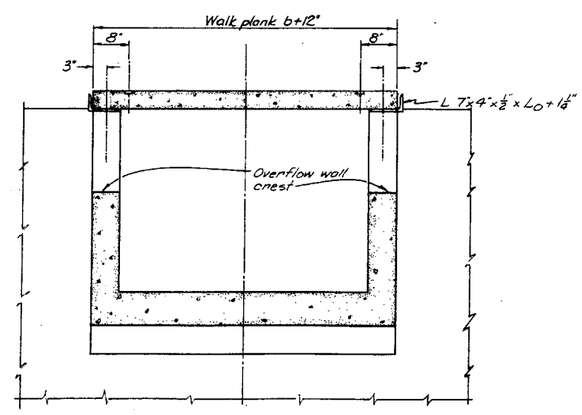

SECTION M

1 0 1 2 3
Scale in Feet

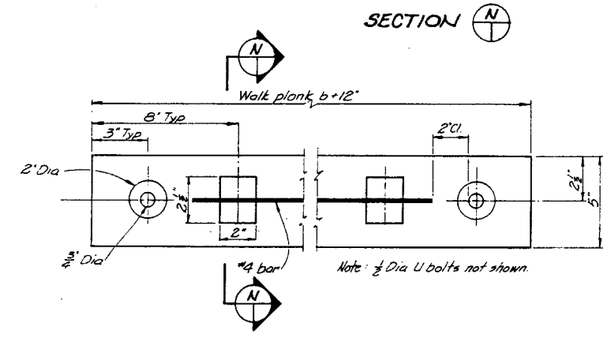

WALK PLANK DETAILS

0 1 2
Scale in Feet
Unless otherwise shown

Re: "Design of Small Canal Structures" U.S. Bureau of Reclamation.

COLORADO STATE STANDARD
RECTANGULAR INCLINED DROP
CO-SSP-62 3 of 4 Sheets.

U. S. DEPARTMENT OF AGRICULTURE
SOIL CONSERVATION SERVICE

Designed J.H.D.	Date 6-77	Approved by Owen P. Johnson	
Drawn J.D.L.	11-77	Title State Cons. Engr.	
Traced		Title	
Checked C.R.H., J.H.D.	12-78	Sheet No. of	Drawing No

STRUCTURE DIMENSIONS AND ESTIMATED QUANTITIES OF MATERIAL

STRUCT NO	H MAX	Q MAX	L_F	L_B	L_P	H_P	$d_2 + hv_2$	h	t	t'	NO. WEEP HOLES	STILLING BASIN REINFORCEMENT: TRANSVERSE REINF. EFP=50 BAR SIZE AND SPACING	TRANSVERSE REINF. EFP=65 BAR SIZE AND SPACING	TRANSVERSE REINF. EFP=90 BAR SIZE AND SPACING	LONGIT REINF. FLOORS	LONGIT REINF. WALLS	ESTIMATED QUANTITIES — TOTAL WEIGHT OF REINFORCING STEEL: EFP=50 BAR SIZE #4	EFP=50 #5	EFP=50 #6	EFP=50 #7	EFP=65 #4	EFP=65 #5	EFP=65 #6	EFP=65 #7	EFP=90 #4	EFP=90 #5	EFP=90 #6	EFP=90 #7	CONC. C.Y.
			(feet - inches)				(feet)	(inches)																					
5-3	3	5	3-2	1-0	5-0	2-7	1.28	8	6	7	4	#4@12	#4@12	#4@12	#6@10	#5@10	277	304	298		277	304	298		277	304	298		6.7
5-5	5	5	3-2	1-2	6-0	2-9	1.42							#4@12			334	341	347		334	341	347		334	341	347		7.6
5-7	7	5	3-2	1-3	6-0	2-11	1.54							#4@9			373	371	388		373	371	388		337	371	388		8.3
5-9	9	5	3-6	1-4	6-6	3-0	1.63							#4@8			413	406	435		413	406	435		471	406	435		9.1
5-11	11	5	3-10	1-5	7-0	3-1	1.71							#4@8			454	455	483		454	455	483		519	455	483		9.9
5-13	13	5	4-2	1-5	7-0	3-2	1.77							#5@12			494	518	527		494	518	527		379	701	527		10.6
5-15	15	5	4-6	1-6	7-6	3-3	1.84							#5@12			550	554	574		550	554	574		419	754	574		11.5
10-3	3	10	3-2	1-4	7-0	2-10	1.70				4			#4@10			350	360	328		350	360	328		370	360	328		8.1
10-5	5	10	3-4	1-6	7-6	3-1	1.89				6		#4@12	#5@12			402	433	374		402	433	374		273	649	374		9.2
10-7	7	10	3-9	1-8	8-0	3-3	2.03						#4@10	#5@12			458	471	423		485	471	423		316	708	423		10.2
10-9	9	10	4-2	1-9	8-6	3-4	2.15						#4@8	#5@10			522	516	440		541	516	440		361	814	440		11.1
10-11	11	10	4-6	1-10	9-0	3-5	2.25					#4@12	#4@8	#5@9			569	551	519		639	551	519		405	885	519		12.1
10-13	13	10	4-11	1-11	9-6	3-6	2.33					#4@10	#4@8	#5@9			675	603	568		696	603	568		450	954	568		13.0
10-15	15	10	5-4	2-0	10-0	3-7	2.42					#4@10	#5@12	#5@8			723	635	616		433	916	616		496	1045	616		13.9
15-3	3	15	3-6	1-7	8-0	3-4	1.96					#4@12	#4@9	#5@10			416	443	405		434	443	405		264	728	405		9.6
15-5	5	15	3-11	1-9	8-6	3-7	2.18					#4@10	#5@12	#5@8			503	498	462		306	812	462		306	898	462		10.9
15-7	7	15	4-4	1-11	9-6	3-10	2.34					#4@9	#5@12	#5@8			585	581	525		350	879	525		350	1028	525		12.2
15-9	9	15	4-10	2-0	10-0	4-0	2.48					#4@8	#5@10	#6@10			698	642	581		396	1025	581		396	642	1145		13.4
15-11	11	15	5-3	2-1	10-6	4-2	2.58					#5@12	#5@9	#6@9			441	1021	638		441	1131	638		441	679	1303		14.5
15-13	13	15	5-8	2-2	11-0	4-3	2.69	8				#5@12	#5@9	#6@9			488	1078	695		488	1189	695		488	718	1389		15.5
15-15	15	15	6-2	2-3	11-0	4-4	2.77	9				#5@10	#5@8	#6@9			538	1184	747		538	1294	747		538	754	1448		16.5
20-3	3	20	4-6	1-8	8-6	3-6	2.15	8				#4@10	#4@8	#5@9			513	507	493		583	507	493		305	869	493		11.0
20-5	5	20	4-6	1-11	9-6	3-10	2.39	8				#4@9	#5@12	#5@8			614	595	559		213	1126	559		345	1071	559		12.5
20-7	7	20	5-0	2-0	10-0	4-1	2.56	8				#4@8	#4@6	#6@9			711	670	626		850	670	626		393	670	1303		13.9
20-9	9	20	5-6	2-2	11-0	4-4	2.70	8				#5@10	#5@9	#6@9			441	1178	697		441	1245	697		441	722	1443		15.3
20-11	11	20	6-0	2-3	11-6	4-6	2.83	9				#4@6	#6@10	-----			991	782	763		491	782	1044		-----	-----	-----		16.6
20-13	13	20	6-6	2-4	12-0	4-8	2.94	9				#5@9	#5@6	-----			588	1442	829		541	1778	829		-----	-----	-----		17.8
20-15	15	20	7-0	2-5	12-0	4-9	3.03	9				#5@9	#5@6	-----			594	1497	888		594	1836	888		-----	-----	-----		18.9
25-3	3	25	4-8	1-10	9-0	3-10	2.29	8				#4@9	#5@12	#5@8			721	291	501		305	815	501		305	988	501		11.6
25-5	5	25	5-0	2-0	10-0	4-2	2.53	8				#5@12	#5@9	#6@9			364	986	572		364	1117	572		364	629	1264		13.7
25-7	7	25	5-6	2-2	11-0	4-6	2.72	8			6	#4@6	#6@10	-----			1040	705	644		538	652	1281		-----	-----	-----		15.3
25-9	9	25	6-1	2-4	11-6	4-8	2.87	9			8	#5@9	#6@10	-----			475	1355	710		475	801	1443		-----	-----	-----		17.7
25-11	11	25	6-8	2-5	12-0	4-10	3.00	9	6	7		#5@8	#6@9	-----		#5@10	489	1522	777		532	851	1668		-----	-----	-----		19.1
25-13	13	25	7-2	2-6	12-6	5-0	3.11	10	8	9		#5@12	#5@9	#6@9		#6@10	594	808	1693		594	945	1693		594	330	2638		22.3
25-15	15	25	7-8	2-7	13-0	5-2	3.22	10	8	9		#5@10	#5@9	#6@9		#6@10	651	961	1784		651	1002	1784		651	361	2776		23.8
30-3	3	30	5-0	1-11	9-6	4-0	2.41	8	6	7		#4@8	#4@6	#6@10		#5@10	697	606	585		799	606	585		359	606	1212		14.0
30-5	5	30	5-4	2-1	10-6	4-4	2.66	8	6	7		#5@10	#5@8	#6@9		#5@10	409	1254	664		409	1610	664		409	662	1440		15.9
30-7	7	30	5-11	2-3	11-0	4-7	2.85	9	6	7		#5@9	#6@10	-----		#5@10	468	1239	739		468	785	1482		-----	-----	-----		17.6
30-9	9	30	6-6	2-5	12-0	4-10	3.00	9	6	7		#5@8	#6@9	-----		#5@10	524	1575	821		524	835	1725		-----	-----	-----		19.4
30-11	11	30	7-1	2-6	12-6	5-0	3.14	10	8	9		#5@12	#5@9	#6@9		#6@10	589	735	1786		588	949	1786		589	285	2759		22.7
30-13	13	30	7-8	2-7	13-0	5-2	3.26	10	8	9		#5@10	#5@8	#6@9		#6@10	648	1018	1971		648	1123	1876		648	332	2921		24.3
30-15	15	30	8-3	2-8	13-6	5-4	3.36	10	8	9		#5@10	#5@8	#6@8		#6@10	707	1102	1995		707	1250	1995		707	372	3220		25.9
40-3	3	40	5-3	2-1	10-6	4-4	2.67	8	6	7		#5@10	#5@8	#6@9		#5@10	407	1149	615		407	1377	615		406	656	1417		15.8
40-5	5	40	5-11	2-4	11-6	4-9	2.95	9	6	7		#5@9	#6@9	-----		#5@10	468	1426	699		467	784	1590		-----	-----	-----		18.0
40-7	7	40	6-7	2-6	12-6	5-0	3.16	10	8	9		#5@12	#5@9	#6@9		#6@10	536	769	1669		536	967	1669		536	245	2667		21.8
40-9	9	40	7-2	2-8	13-0	5-3	3.34	10	8	9		#5@10	#5@8	#5@6		#6@10	597	997	1762		597	1103	1762		597	1364	1762		23.4
40-11	11	40	7-10	2-9	13-6	5-5	3.49	11	8	9		#5@10	#6@10	#6@6		#6@10	661	1116	1938		661	324	2946		661	324	3601		25.2
40-13	13	40	8-6	2-11	14-6	5-7	3.62	11	8	9		#5@9	#6@10	#7@10		#6@10	729	1283	2068		729	372	3155		729	372	2068	1505	27.2
40-15	15	40	9-1	3-0	15-0	5-9	3.73	11	8	9		#5@8	#6@9	#7@10		#6@10	794	1521	2164		794	420	3290		794	420	2164	1568	29.2
50-3	3	50	5-9	2-3	11-0	4-7	2.89	9	6	7		#5@9	#6@10	-----		#5@10	429	1375	715		429	759	1538		-----	-----	-----		17.6
50-5	5	50	6-6	2-6	12-6	5-0	3.19	10	8	9		#5@12	#5@9	#6@9		#6@10	503	725	1741		503	918	1741		503	208	1734		22.1
50-7	7	50	7-2	2-8	13-6	5-4	3.41	10	8	9		#5@10	#5@8	#6@8			547	967	1891		568	1132	1891		568	247	3188		24.5
50-9	9	50	7-10	2-9	14-0	5-7	3.59	11	8	9		#5@9	#6@10	#7@10			640	1261	2072		640	289	3183		640	289	2072	1538	26.6
50-11	11	50	8-6	3-0	15-0	5-10	3.76	12	8	9	8	#5@8	#6@9	#7@9			713	1414	2193		713	331	3523		713	331	2192	1823	28.9
50-13	13	50	9-2	3-1	15-6	6-0	3.89	12	8	9	10	#5@8	#5@6	#7@8		#6@10	787	1520	2328		787	1783	2328		787	374	2328	2112	30.8
60-3	3	60	6-0	2-5	12-0	4-10	3.07	9	6	7	8	#5@8	#6@9	-----		#5@10	469	1318	811		469	788	1834		-----	-----	-----		19.4
60-5	5	60	6-9	2-8	13-0	5-3	3.38	10	8	9	8	#5@10	#5@8	#5@6		#6@10	554	865	1869		554	1091	2004		554	1386	2004		23.9
60-7	7	60	7-6	2-9	14-0	5-7	3.61	11			8	#5@9	#6@10	#7@10			631	1078	2112		631	255	3257		631	255	2112	1573	26.5
60-9	9	60	8-2	3-0	15-0	5-10	3.81	12			8	#5@8	#6@9	#7@9			709	1418	2230		709	300	3604		709	300	2231	1886	28.9
60-11	11	60	8-11	3-2	16-0	6-1	3.97	12			10	#6@10	#6@8	#5&6@9			786	343	3692		786	343	4017		786	1338	4133		31.4
70-3	3	70	6-3	2-6	12-6	5-0	3.21	10			8	#5@12	#5@9	#6@9			526	784	1810		526	974	1810		526	176	1932		23.1
70-5	5	70	7-0	2-9	14-0	5-5	3.54	11			8	#5@10	#6@10	#6@6			599	1171	1999		599	218	3140		599	218	3904		26.3
70-7	7	70	7-9	3-0	15-0	5-10	3.78	11			8	#5@8	#5@6	#7@9			670	1421	2218		669	1825	2218		670	256	2218	1971	29.2
70-9	9	70	8-6	3-2	16-0	6-1	3.99	12			10	#6@10	#5@6	#5&6@9			748	293	3738		748	1841	2373		748	1350	3902		31.8
70-11	11	70	9-3	3-4	16-6	6-4	4.15	13				#5@6	#7@9	#5&6@9			825	1980	2650		825	346	2650	2201	825	1440	4244		34.1
80-3	3	80	6-6	2-8	13-6	5-4	3.46	10				#4@6	#5@8	#6@8			1322	173	1880		514	1131	1880		514	173	3282		24.4
80-5	5	80	7-3	3-0	15-0	5-9	3.80	12				#5@8	#5@6	#7@9			592	1294	2124		592	1633	2124		592	217	2124	1910	27.7
80-7	7	80	8-0	3-3	16-0	6-1	4.06	12				#6@10	#6@8	#4&6@8			666	254	3669		666	254	4004		1404	254	4004		30.4
80-9	9	80	8-10	3-5	17-0	6-5	4.27	13				#5@6	#7@9	-----			746	1412	2545		746	305	2545	2277	-----	-----	-----		33.2
90-3	3	90	6-9	2-9	13-6	5-4	3.56	11				#4@6	#5@8	#6@8			1388	180	2116		535	1197	2116		535	180	3545		26.3
90-5	5	90	7-6	3-1	15-0	5-10	3.91	12				#5@8	#5@6	#7@9			611	1366	2317		611	1738	2317		611	223	2317	1882	29.8
90-7	7	90	8-4	3-4	16-6	6-3	4.18	13				#6@10	#7@10	#5&6@9			690	258	4009		690	258	2515	2062	690	1390	4179		33.2
90-9	9	90	9-2	3-6	17-6	6-8	4.40	13				#5@6	#7@9	-----			767	2150	2781		767	315	2781	2966	-----	-----	-----		36.4
100-3	3	100	7-4	2-11	14-6	5-8	3.78	11				#5@8	#5@6	#7@10			552	1278	2190		552	1649	2190		490	180	2190	1789	28.0
100-5	5	100	8-2	3-3	16-0	6-2	4.14	12				#5@6	#6@8	#5&6@9			633	1856	2398		633	223	4187		632	1307	4054		31.7
100-7	7	100	9-0	3-6	17-6	6-7	4.42	13				#5@6	#7@9	-----			715	2086	2700		715	260	2700	2675	-----	-----	-----		35.2
100-9	9	100	9-11	3-8	18-6	6-11	4.65	14	8	9	10	#6@8	#6@6	-----	#6@10	#6@10	803	318	5006		803	318	5459		-----	-----	-----		38.3

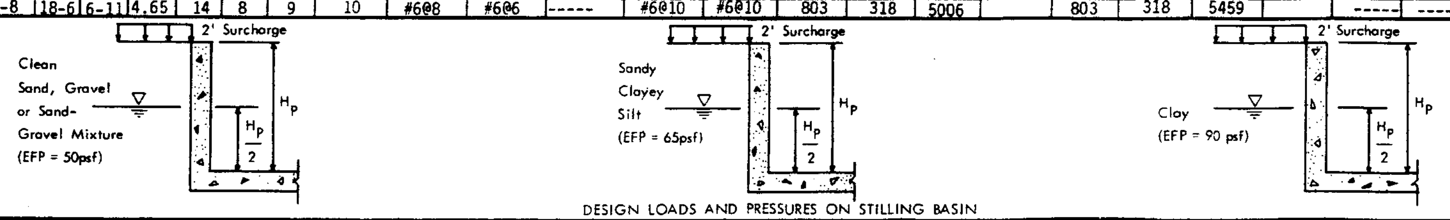

DESIGN LOADS AND PRESSURES ON STILLING BASIN

STANDARD DIMENSIONS

Q MAX	b_T	a	b	L_O	H_F min	H_O min	H_S	c	d	L_T	CHECK INLET GATE SIZE	CHECK INLET FRAME HT	NO. OF WALK PLANKS
	(feet - inches)							(inches)		(ft-in)	(inches)	(ft.-in.)	
5	2-0	1-9	3-0	2-7	2-6	1-0	1-8	3	6	5-0	36x12	5-0	7
10	2-0	2-1	3-6	3-7	2-10	1-4	2-0	3	9	5-0	42x16	5-6	8
15	2-0	2-5	4-0	3-7	3-2	1-8	2-2	5	4	7-0	48x20	5-6	8
20	2-0	2-7	4-6	4-7	3-4	1-10	2-4	5	7	8-0	54x22	5-6	10
25	2-0	2-9	5-0	4-7	3-6	2-0	2-5	5	10	8-0	60x24	5-5	10
30	2-0	3-0	5-6	4-7	3-9	2-3	2-6	7	5	9-0	66x27	6-0	10
40	2-0	3-6	6-0	5-7	4-0	2-6	2-8	7	8	9-0	72x30	6-0	11
50	2-6	4-0	6-6	5-7	4-3	2-9	2-9	7	11	10-0	78x33	6-0	11
60	2-6	4-3	7-0	6-7	4-6	3-0	2-10	9	6	10-0	84x36	6-0	13
70	3-0	4-6	7-6	6-7	4-9	3-3	2-11	9	9	11-0	90x39	6-6	13
80	3-0	4-6	7-6	6-7	5-0	3-6	3-0	9	9	11-0	90x42	6-6	13
90	3-6	5-0	8-0	7-7	5-3	3-9	3-1	11	4	12-0	96x45	6-6	15
100	3-6	5-3	8-0	7-7	5-6	4-0	3-3	11	4	12-0	96x45	6-6	15

DESIGN CRITERIA

SAMPLE OF STANDARD STRUCTURE SIZES

Structure No. 5-3 indicates Q = 5 cfs, H = 3 ft.

HYDRAULIC DESIGN OF INLET

The dimensions of the control notch at the inlet of the structure should be determined for maximum flow and 20% of maximum flow. Notch dimensions N, P, and T, may be determined from pp 59, 170-178, "Design of Small Canal Structures", Bureau of Reclamation, USDI, 1974.

The base width of the structure is determined from the formula, $b = \frac{360\sqrt{Q}}{Q + 350}$.

Where steel slide gates are used at the inlet of the structure, the minimum gate width shall be equal to the base width of the structure.

HYDRAULIC DESIGN OF CHUTE

"H" is the difference in energy gradient levels upstream and downstream of the jump.

The minimum downstream energy gradient for full design capacity is determined by reducing the assumed "n" value for the channel by 20% and computing the energy gradient.

"d_2" is the height of the downstream end of the hydraulic jump and may be determined from the formula:

$$d_2 = \frac{-d_1}{2} + \sqrt{\frac{2V_1^2 d_1}{g} + \frac{d_1^2}{4}}$$

or from Figure 2-37, "Design of Small Canal Structures",
"d_1" may be obtained from Figure 2-37, "Design of Small Canal Structures".

The bottom elevation of the stilling basin is found by subtracting $d_2 + hv_2$ from the downstream energy gradient.

HYDRAULIC DESIGN OF STILLING BASIN

The minimum stilling basin length is $4d_2$.

The minimum freeboard for the stilling basin is obtained by using Figure 2-33, "Design of Small Canal Structures."

The minimum length between chute blocks and floor blocks is $0.8d_2$.

STRUCTURAL DESIGN

Reinforcement steel design is based on working stresses of 20,000 psi with a specified minimum yield strength of 40,000 psi.

Monolithic concrete design is based on a compressive strength of 4,000 psi at 28 days with a working stress of 1,600 psi.

Drain fill will be sized and graded in accordance with the procedures contained in Soil Mechanics Note No. 1. "Tentative Guides for Determining the Gradation of Filter Materials", Soil Conservation Service, USDA, May 1, 1968.

Riprap protection will be designed in accordance with the procedure in Chapter 16 "ENGINEERING FIELD MANUAL."

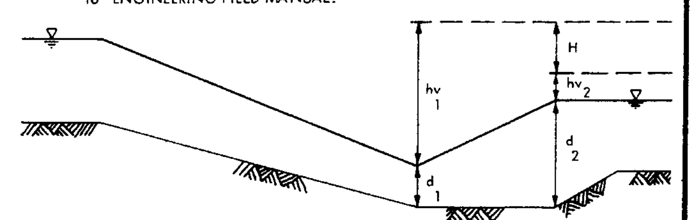

SPECIFIC ENERGY & HEAD LOSS IN STILLING BASIN

Re: "DESIGN OF SMALL CANAL STRUCTURES"
U.S. BUREAU OF RECLAMATION

COLORADO STATE STANDARD
RECTANGULAR INCLINED DROP
CO-SSP-62 4 OF 4 SHEETS

U. S. DEPARTMENT OF AGRICULTURE
SOIL CONSERVATION SERVICE

	Date	
Designed E.B.A.	6-77	Approved by [signature]
Drawn J.D.L.	11-77	Title State Cons. Engr.
Traced		Title
Checked J.H.D.	10-78	Sheet No. of / Drawing No.