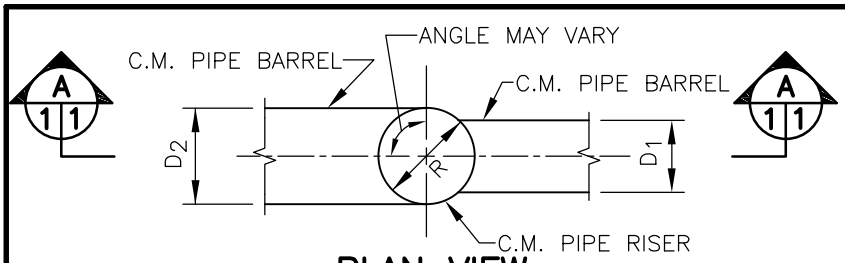

PLAN VIEW
NOT TO SCALE

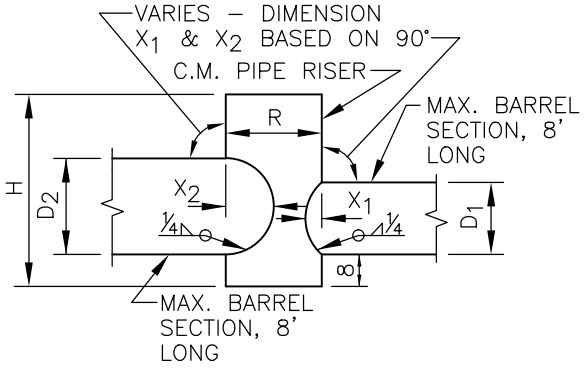

SECTIONAL ELEVATION A 1 1
DETAILS OF BARREL
WITH RISER TEE SECTION
NOT TO SCALE

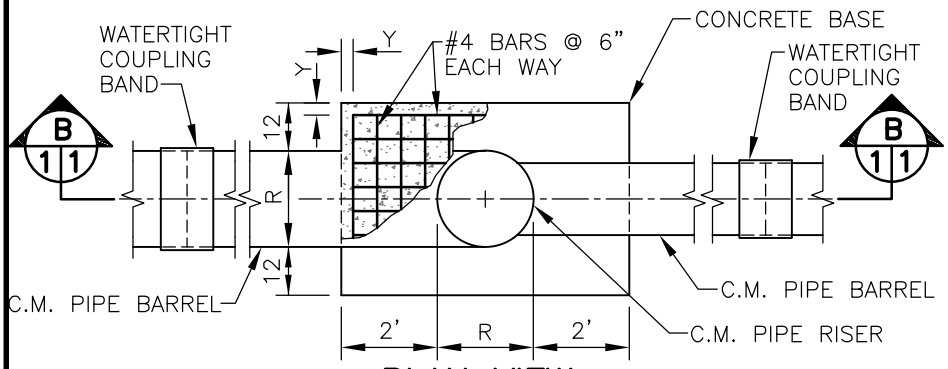

PLAN VIEW
NOT TO SCALE

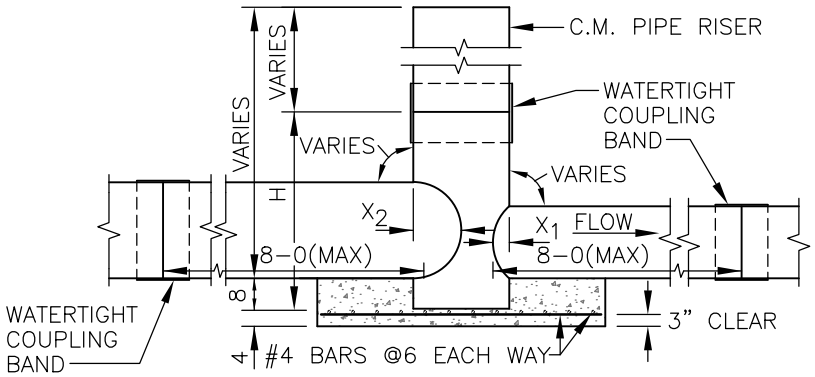

SECTIONAL ELEVATION B 1 1
DETAILS OF RISER
NOT TO SCALE

NOTES

1. STANDARDIZED DESIGNS – MUST BE ADAPTED TO THE SPECIFIC SITE.
2. CONCRETE SHALL CONFORM TO THE REQUIREMENTS OF CONSTRUCTION SPECIFICATION 31, CONCRETE, OR 32, CONCRETE FOR MINOR STRUCTURES.
3. REINFORCING STEEL SHALL CONFORM TO THE REQUIREMENTS OF CONSTRUCTION SPECIFICATION 34, STEEL REINFORCEMENT.
4. CORRUGATED METAL PIPE SHALL CONFORM TO THE REQUIREMENTS OF CONSTRUCTION SPECIFICATION 51, CORRUGATED METAL PIPE CONDUIT.
5. THE STRUCTURE SHALL CONFORM TO ENGINEERING STANDARD AND SPECIFICATION 378, POND WHEN APPROPRIATE.

QUANTITY AND DIMENSION TABLE

RISER DIA. R (INS.)	BARREL DIA. D_1 (INS.)	HEIGHT H (FT.)	X_1 (INS.)	Y (INS.)	X_2 (INS.)											REINFORCING STEEL (LBS.)	CONCRETE (CU. YDS.)
					D_2= 12 (INS.)	D_2= 15 (INS.)	D_2= 18 (INS.)	D_2= 21 (INS.)	D_2= 24 (INS.)	D_2= 30 (INS.)	D_2= 36 (INS.)	D_2= 42 (INS.)	D_2= 48 (INS.)	D_2= 54 (INS.)	D_2= 60 (INS.)		
15	12	4	3	4½	3	7½										41	0.63
24	15	4	2⅝	3	1⅝	2⅝	4⅛	6¼	12							61	0.89
24	18	4	4⅛	3	1⅝	2⅝	4⅛	6¼	12							61	0.89
30	21	4	4¼	3	1¼	2	3	4¼	6	15						75	1.08
30	24	4	6	3	1¼	2	3	4¼	6	15						75	1.08
42	30	6	6¼	3	⅞	1⅜	2	2⅜	3¾	6¼	10⅛	21				106	1.53
48	36	6	8⅛	3	¾	1¼	1¾	2⅜	3¼	5¼	8⅛	12⅜	24			124	1.78
54	42	6	10	3	⅝	1⅛	1½	2⅛	2¾	4½	6⅞	10	14⅜	27		143	2.05
60	48	6	12	3	⅝	1	1⅜	1⅛	2½	4	6	8⅝	12	16⅜	30	163	2.33

NRCS
Natural Resources Conservation Service
United States Department of Agriculture

RISER DETAILS
COLORADO

(REVISED LAST ON 10–11)

		Date
Designed	CRH	11–69
Drawn	DDD	10–11
Checked		
Approved	J.E. ANDREWS S.C.E.	10–11

File Name

Drawing Name
CO–SSP–19

Sheet 1 of 1