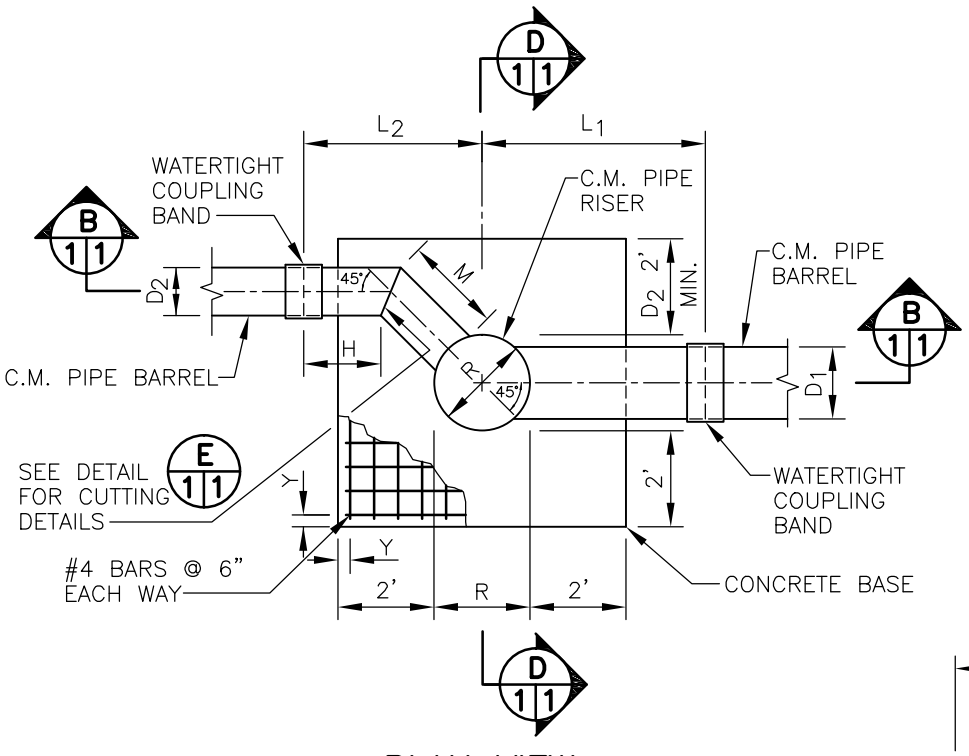

PLAN VIEW

NOT TO SCALE

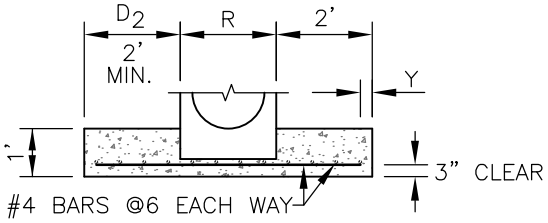

SECTION D 1 1

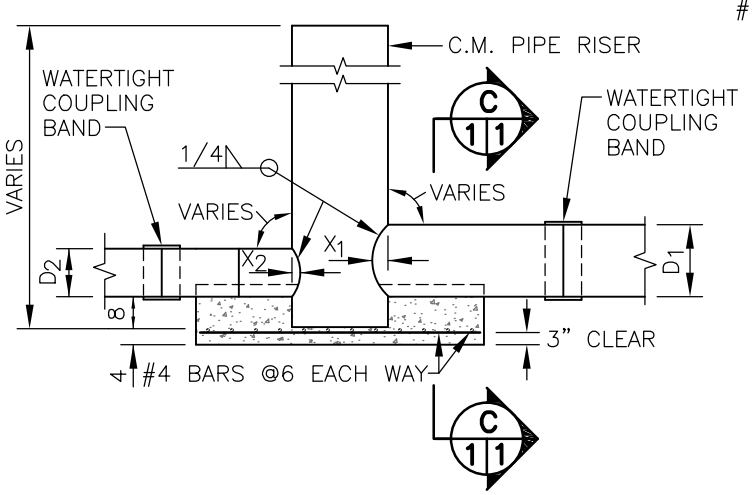

SECTIONAL ELEVATION B 1 1

NOT TO SCALE

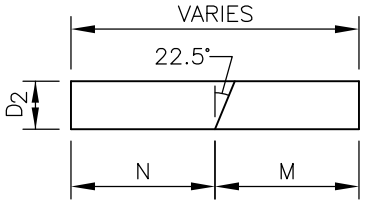

DETAIL E 1 1

INLET PIPE CUTTING DETAIL

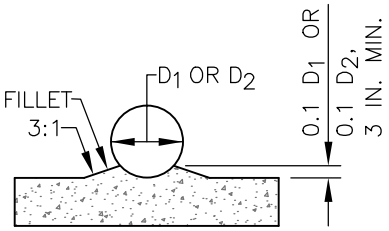

SECTION C 1 1

NRCS
Natural Resources Conservation Service
United States Department of Agriculture

RISER DETAILS COLORADO

(REVISED LAST ON 01-12)

		Date
Designed	RAK	01-80
Drawn	DDD	01-12
Checked		
Approved	J.E. ANDREWS S.C.E.	01-12

File Name

Drawing Name CO-SSP-27

Sheet 1 of 2

DIMENSION TABLE

RISER DIA. R (INS.)	BARREL DIA. D (INS.)	Y (INS.)	L_1 (FT–INS)	X_1 (INS.)	L_2 (FT.–INS.) X_2 (INS.)								
					D_2 = 12 (INS.)	D_2 = 15 (INS.)	D_2 = 18 (INS.)	D_2 = 21 (INS.)	D_2 = 24 (INS.)	D_2 = 30 (INS.)	D_2 = 36 (INS.)	D_2 = 42 (INS.)	D_2 = 48 (INS.)
15	12	4½	4–4½	3	3–7⅜ 3								
24	15	3	4–9⅜	2⅝	3–7 1⅝	3–8 2⅝							
24	18	3	4–7⅞	4⅛	3–7 1⅝	3–8 2⅝	3–8⅝ 4¼						
30	21	3	4–10¾	4¼	3–6⅜ 1¼	3–7⅝ 2	3–8½ 3	3–9⅜ 4¼					
30	24	3	4–9	6	3–6⅜ 1¼	3–7⅝ 2	3–8½ 3	3–9⅜ 4¼	3–8 6				
42	30	3	5–2¾	6¼	3–4⅞ ⅜	3–6¼ 1⅜	3–7⅛ 2	3–8⅝ 2¾	3–7⅞ 3¾	3–9⅝ 6¼			
48	36	3	5–3⅞	8⅛	3–4⅛ ¾	3–6½ 1¼	3–6¾ 1¾	3–6¼ 2⅜	3–7⅜ 3¼	3–9¼ 5¼	5–8⅞ 6⅛		
54	42	3	5–2	10	3–3⅜ ⅜	3–4¾ 1⅛	3–4¼ 1½	3–5⅝ 2⅛	3–6¾ 2¾	3–8⅞ 4½	5–8⅞ 6⅞	5–8¼ 10	
60	48	3	5–6	12	3–2½ ⅜	3–2⅛ 1	3–3½ 1⅜	3–4⅞ 1⅞	3–6⅛ 2½	5–6⅝ 4	5–8⅝ 6	5–8⅜ 8⅝	5–9⅜ 12

M = 2–0
N = 2–0

M = 3–0
N = 3–0

M = 2–6
N = 1–6

M = 3–6
N = 2–6

NOTES

1. STANDARDIZED DESIGNS – MUST BE ADAPTED TO THE SPECIFIC SITE.
2. CONCRETE SHALL CONFORM TO THE REQUIREMENTS OF CONSTRUCTION SPECIFICATION 31, CONCRETE, OR 32, CONCRETE FOR MINOR STRUCTURES.
3. REINFORCING STEEL SHALL CONFORM TO THE REQUIREMENTS OF CONSTRUCTION SPECIFICATION 34, STEEL REINFORCEMENT.
4. CORRUGATED METAL PIPE SHALL CONFORM TO THE REQUIREMENTS OF CONSTRUCTION SPECIFICATION 51, CORRUGATED METAL PIPE CONDUIT.
5. CONCRETE, REINFORCING STEEL AND CORRUGATED STEEL PIPE SHALL CONFORM TO ENGINEERING STANDARD AND SPECIFICATIONS 578, POND WHEN APPROPRIATE IN LIEU OF NOTES 1, 2 AND 3 ABOVE.

NRCS
Natural Resources Conservation Service
United States Department of Agriculture

RISER DETAILS
COLORADO

(REVISED LAST ON 01–12)

		Date
Designed	RAK	01–80
Drawn	DDD	01–12
Checked		
Approved	J.E. ANDREWS S.C.E.	01–12

File Name

Drawing Name CO–SSP–27

Sheet 2 of 2