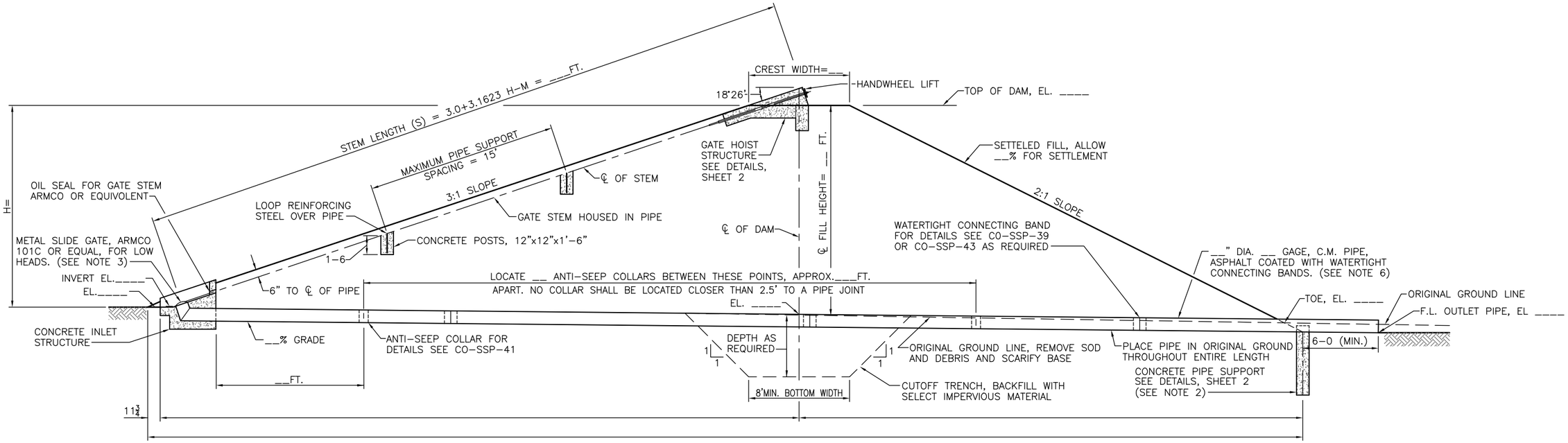

SECTIONAL ELEVATION OF DAM ALONG CENTERLINE OF OUTLET PIPE

HEADGATE TRASH RACK DIMENSIONS

PIPE DIA. "D1" (IN.)	"A" (IN.)	"C" (FT.-IN.)	"G" (FT.-IN.)	NO. OF MARK Ⓟ REQ'D	NO. OF MARK Ⓡ REQ'D	TOTAL LENGTH OF PIPE REQ'D
8	2	4-4	1-1	3	2	15-2
10	3	4-5	1-3	3	2	15-9
12	4	4-6	1-5	3	2	16-4
15	3	5-7	1-8	4	2	25-8
18	2½	5-9	2-0	5	2	32-9
21	4	6-10	2-3	5	2	38-8
24	3	7-0	2-6	6	2	47-0

CONCRETE VOLUMES

PIPE DIA. D (IN.)	CONCRETE PIPE SUPPORT (C.Y.)	CONC. POSTS (C.Y.-EA.)	INLET STRUCTURE (C.Y.)	GATE HOIST STRUCTURE (C.Y.)
8	0.52	.056	0.75	0.56
10	0.56	.056	0.83	0.56
12	0.60	.056	0.92	0.56
14	0.64	.056	1.31	0.56
15	0.65	.056	1.36	0.56
16	0.67	.056	1.42	0.56
18	0.71	.056	1.59	0.56
20	0.75	.056	2.11	0.56
21	0.77	.056	2.20	0.56
24	0.83	.056	2.42	0.56

SLOPE OF CONDUIT "D1"	ANGLE OF ELBOW
0.0%	71°34'
1.0%	71°00'
2.0%	70°25'
3.0%	69°51'
4.0%	69°17'
5.0%	68°42'
6.0%	68°08'

MINIMUM GAGE OF PIPE

DIA. OF PIPE (IN.)	C.M. PIPE	WELDED STEEL PIPE			
	0 TO 20 FEET OF FILL	0-5 FEET OF FILL	5-10 FEET OF FILL	10-15 FEET OF FILL	15-19 FEET OF FILL
8	16	12	12	10	10
10	16	12	10	7	7
12	16	10	7	7	3
14	–	10	7	3	3
15	16	–	–	–	–
16	–	7	3	3	5/16"
18	16	7	3	5/16"	5/16"
20	–	3	5/16"	5/16"	3/8"
21	14	–	–	–	–
24	14	3	5/16"	3/8"	7/16"

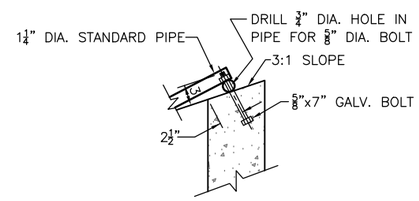

HEADGATE TRASH RACK CONNECTING BOLT DETAIL

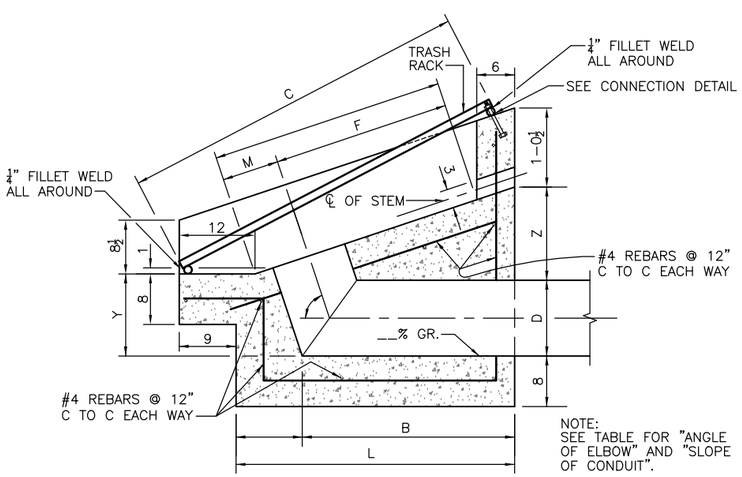

NOTE:
SEE TABLE FOR "ANGLE OF ELBOW" AND "SLOPE OF CONDUIT".

SECTIONAL ELEVATION C-C DETAILS OF INLET STRUCTURE

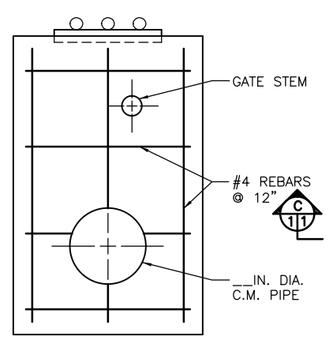

SECTION B-B

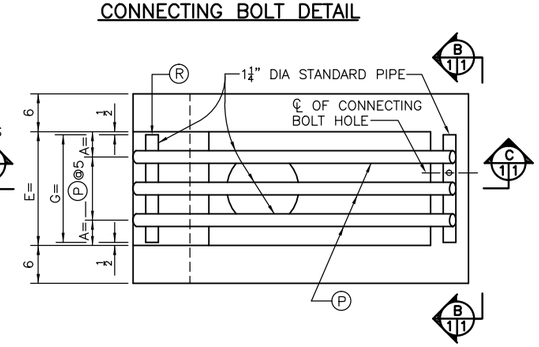

PLAN VIEW – HEADGATE TRASH RACK

TABLE OF DIMENSIONS FOR INLET AND HOIST STRUCTURES

PIPE DIA. "D1" (IN.)	STEM DIA. (IN.)	STEM HOUSING DIA. (IN.)	"E"	"H"	"F"	"L"	"Z"	"Y"	"B"	TYPE OF LIFT	HAND-WHEEL DIA. (IN.)
8	⅞	1¼	1-2	0-7	2-4	3-6¼	1-3⅜	10¼	2-8⅝	H-10	10
10	⅞	1¼	1-4	0-8	2-4	3-7⅛	1-3	11⅝	2-9⅛	H-10	10
12	⅞	1¼	1-6	0-9	2-4	3-8⅛	1-2¾	1-1	2-9⅝	H-10	10
14	⅞	1¼	1-8	0-10	3-4	4-8⅜	1-4⅛	1-2⅜	3-9½	H-10	10
15	⅞	1¼	1-9	0-10½	3-4	4-8⅞	1-5⅞	1-3	3-9¾	H-10	10
16	⅞	1¼	1-10	0-11	3-4	4-9⅜	1-5¾	1-3⅝	3-10	H-10	10
18	1⅛	2	2-1	1-0	3-4	4-10⅜	1-5½	1-5	3-10½	H-14	14
20	1⅛	2	2-3	1-1	4-4	5-10⅝	1-8⅞	1-6⅞	4-10⅜	H-14	14
21	1⅛	2	2-4	1-1½	4-4	5-11⅛	1-8⅞	1-7⅛	4-10⅝	H-14	14
24	1⅛	2	2-7	1-3	4-4	6-0½	1-8¼	1-9⅛	4-11⅜	H-14	14

NOTES

1. SUFFICIENT ANTI-SEEP COLLARS TO INCREASE THE PATH OF PERCOLATION BY 15% SHALL BE INSTALLED WITHIN THE UPSTREAM TWO-THIRDS (2/3) LENGTH OF THE OUTLET PIPE. MAXIMUM SPACING OF ANTI-SEEP COLLARS SHALL BE 25 FEET.
2. CONCRETE PIPE SUPPORT IS OPTIONAL DEPENDING ON SITE CONDITIONS. WHEN PIPE SUPPORT IS USED, IT SHOULD BE LOCATED AT THE INTERSECTION OF BACK SLOPE OF DAM AND BOTTOM OF PIPE.
3. ARMCO NO. 101C METAL SLIDE GATES DIA. 8" TO 18" INCLUSIVE, ARE DESIGNED FOR 20-FOOT WORKING HEADS, DIA. 20" AND 21" FOR 16' WORKING HEADS AND DIA. 24" FOR 12' WORKING HEADS.
4. THIS DESIGN TO BE USED WITH WATER DEPTHS OF 15 FEET OR LESS.
5. WHERE SOIL CONDITIONS WARRANT, ASBESTOS BONDED (OR ITS EQUIVALENT) CORRUGATED METAL PIPE MAY BE USED.
6. HELICAL CORRUGATED PIPE MAY BE USED ONLY IF WATERTIGHT CONNECTING BANDS ARE USED.

		DATE
DESIGNED	C.R.H.	06-27-60
DRAWN	D.D.D.	03-30-12
CHECKED		
APPROVED	J.E. ANDREWS, S.C.E.	03-30-12

STOCKWATER DAM WITH SLOPING HEADGATE INSTALLATION

8" TO 24" HEADGATE, 3:1 UPSTREAM SLOPE

(REVISED LAST ON 03-12)

NRCS
Natural Resources Conservation Service
United States Department of Agriculture

FILE NO.

DRAWING NO.
CO-SSP-57

SHEET 1 OF 2

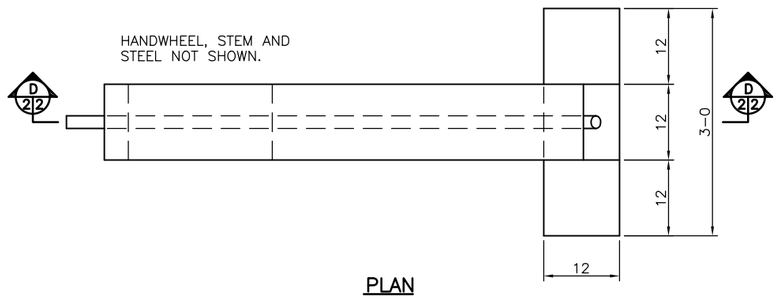

PLAN

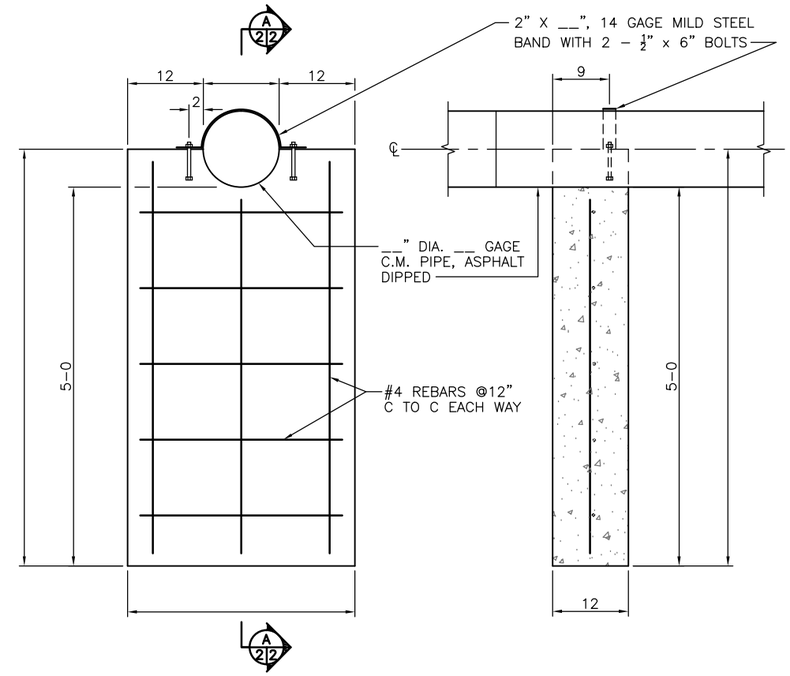

ELEVATION

SECTIONAL ELEVATION A–A

CONCRETE PIPE SUPPORT DETAILS

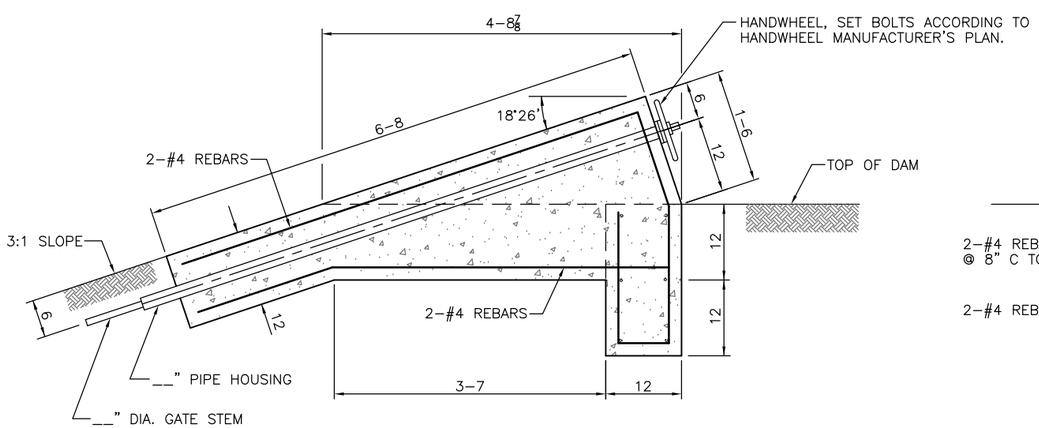

SECTION D–D

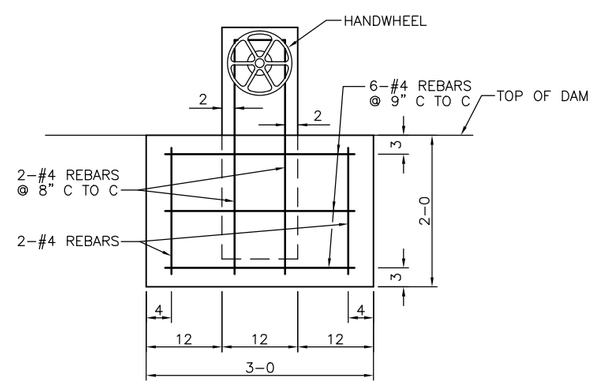

END

DETAILS OF GATE HOIST

		DATE
DESIGNED	C.R.H.	06–27–60
DRAWN	D.D.D.	03–30–12
CHECKED		
APPROVED	J.E. ANDREWS, S.C.E.	03–30–12

STOCKWATER DAM WITH SLOPING HEADGATE INSTALLATION

8" TO 24" HEADGATE, 3:1 UPSTREAM SLOPE

(REVISED LAST ON 03–12)

NRCS
Natural Resources Conservation Service
United States Department of Agriculture

FILE NO.

DRAWING NO.
CO–SSP–57

SHEET 2 OF 2