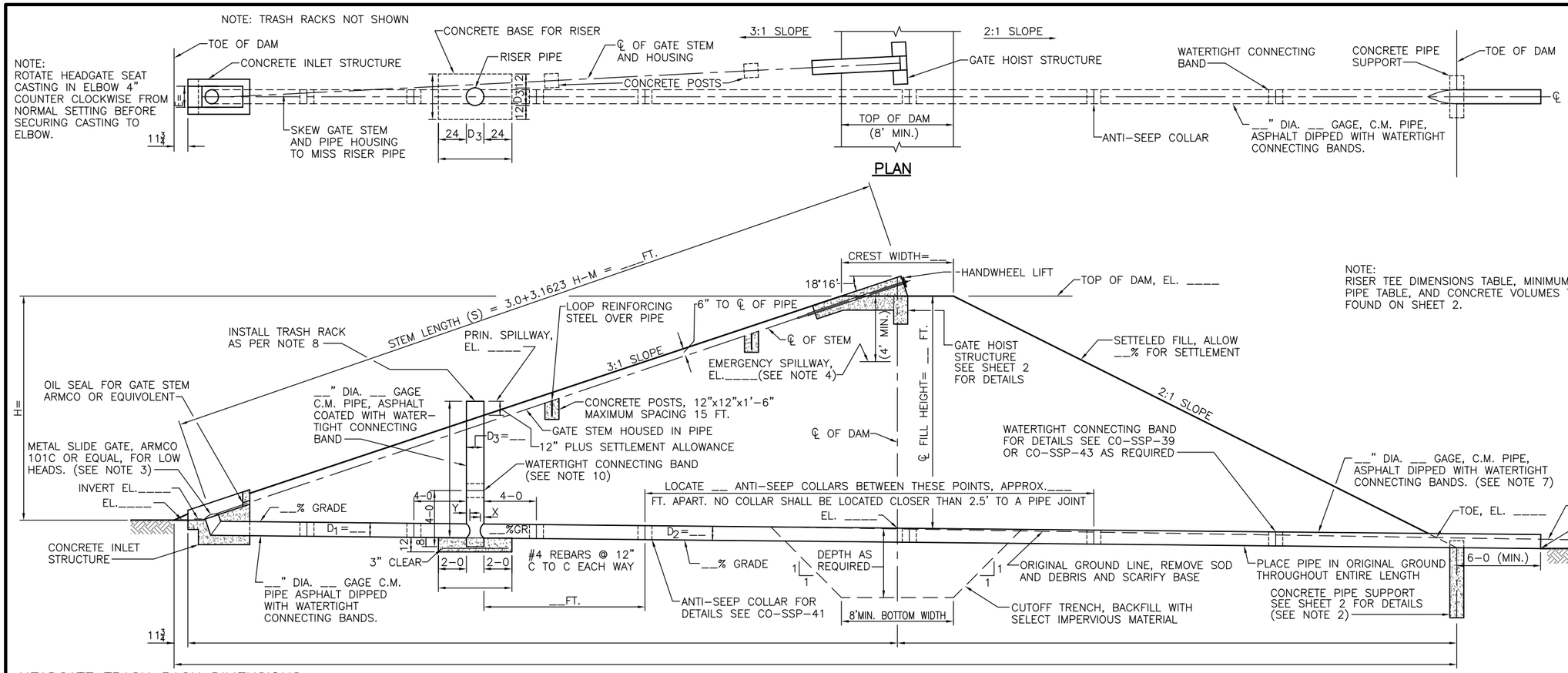

NOTE:
RISER TEE DIMENSIONS TABLE, MINIMUM GAGE OF C.M. PIPE TABLE, AND CONCRETE VOLUMES TABLE CAN BE FOUND ON SHEET 2.

HEADGATE TRASH RACK DIMENSIONS

PIPE DIA. "D_1" (IN.)	"A" (IN.)	"C" (FT.-IN.)	"G" (FT.-IN.)	NO. OF MARK Ⓟ REQ'D	NO. OF MARK Ⓡ REQ'D	TOTAL LENGTH OF PIPE REQ'D
8	2	4-4	1-1	3	2	15-2
10	3	4-5	1-3	3	2	15-9
12	4	4-6	1-5	3	2	16-4
15	3	5-7	1-8	4	2	25-8
18	2½	5-9	2-0	5	2	32-9
21	4	6-10	2-3	5	2	38-8
24	3	7-0	2-6	6	2	47-0

SECTIONAL ELEVATION OF DAM ALONG CENTERLINE OF C.M. PIPE OUTLET

SLOPE OF CONDUIT "D_1"	ANGLE OF ELBOW
0.0%	71°34'
1.0%	71°00'
2.0%	70°25'
3.0%	69°51'
4.0%	69°17'
5.0%	68°42'
6.0%	68°08'

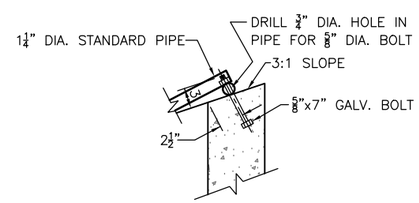

HEADGATE TRASH RACK CONNECTING BOLT DETAIL

TABLE OF DIMENSIONS FOR INLET AND HOIST STRUCTURES

PIPE DIA. "D_1" (IN.)	STEM DIA. (IN.)	STEM HOUSING DIA. (IN.)	"E"	"H"	"F"	"L"	"Z"	"Y"	"B"	TYPE OF LIFT	HAND-WHEEL DIA. (IN.)
8	⅞	1¼	1-2	0-7	2-4	3-6¼	1-3⅜	10¼	2-8⅝	H-10	10
10	⅞	1¼	1-4	0-8	2-4	3-7⅞	1-3	11⅝	2-9⅛	H-10	10
12	⅞	1¼	1-6	0-9	2-4	3-8⅛	1-2¾	1-1	2-9⅝	H-10	10
15	⅞	1¼	1-9	0-10½	3-4	4-8⅞	1-5⅞	1-3	3-9¾	H-10	10
18	1⅛	2	2-1	1-0	3-4	4-10⅜	1-5½	1-5	3-10½	H-14	14
21	1⅛	2	2-4	1-1½	4-4	5-11⅛	1-8⅞	1-7⅞	4-10⅝	H-14	14
24	1⅛	2	2-7	1-3	4-4	6-0½	1-8¼	1-9⅛	4-11⅜	H-14	14

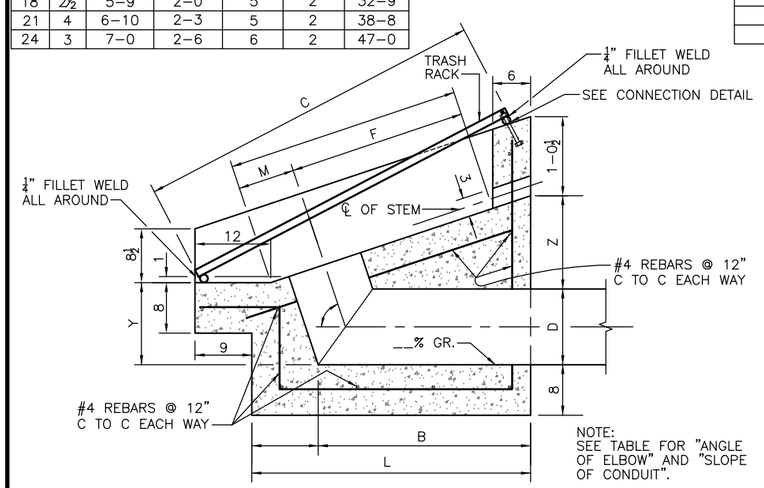

SECTIONAL ELEVATION OF INLET STRUCTURE

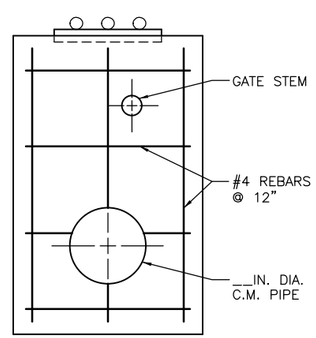

SECTION B-B

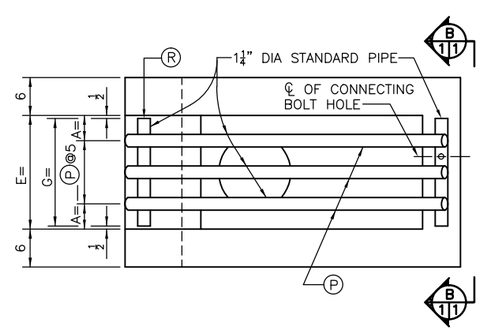

PLAN VIEW – HEADGATE TRASH RACK

NOTES

1. SUFFICIENT ANTI-SEEP COLLARS TO INCREASE THE PATH OF PERCOLATION BY 15% SHALL BE INSTALLED WITHIN THE UPSTREAM TWO-THIRDS (2/3) LENGTH OF THE OUTLET PIPE. MAXIMUM SPACING OF ANTI-SEEP COLLARS SHALL BE 25 FEET.
2. CONCRETE PIPE SUPPORT IS OPTIONAL DEPENDING ON SITE CONDITIONS. WHEN PIPE SUPPORT IS USED, IT SHOULD BE LOCATED AT THE INTERSECTION OF BACK SLOPE OF DAM AND BOTTOM OF PIPE.
3. ARMCO NO. 101C METAL SLIDE GATES DIA. 8" TO 18" INCLUSIVE, ARE DESIGNED FOR 20-FOOT WORKING HEADS, DIA. 20" AND 21" FOR 16' WORKING HEADS AND DIA. 24" FOR 12' WORKING HEADS.
4. THIS DESIGN TO BE USED WITH WATER DEPTHS OF 15 FEET OR LESS.
5. WHERE SOIL CONDITIONS WARRANT, ASBESTOS BONDED (OR ITS EQUIVALENT) CORRUGATED METAL PIPE MAY BE USED.
6. D_1, D_2 AND D_3 = DIAMETER OF DRAWDOWN TUBE, OUTLET PIPE, AND RISER PIPE, RESPECTIVELY.
7. HELICAL CORRUGATED PIPE MAY BE USED ONLY IF WATERTIGHT CONNECTING BANDS ARE USED.
8. FOR DETAILS OF TRASH RACK AND BAFFLE PLATE FOR C.M. PIPE RISERS SEE CO-SSP-60 OR 61.
9. "B"+6" = CENTERLINE DISTANCE OF C.M. PIPE IN INLET STRUCTURE.
10. CONNECTING BAND IS OPTIONAL. USE ONLY FOR EASE OF INSTALLATION WHEN RISER HEIGHT IS 8.0 FEET OR MORE.
11. STANDARDIZED DESIGNS – MUST BE ADAPTED TO THE SPECIFIC SITE.
12. THE STRUCTURE SHALL CONFORM TO ENGINEERING STANDARD AND SPECIFICATIONS 378 POND.

		DATE
DESIGNED	C.R.H.	06-27-60
DRAWN	D.D.D.	03-30-12
CHECKED		
APPROVED	J.E. ANDREWS, S.C.E.	03-30-12

STOCKWATER DAM WITH SLOPING HEADGATE AND TRICKLE SPILLWAY

8" TO 24" HEADGATE, 3:1 UPSTREAM SLOPE

(REVISED LAST ON 03-12)

NRCS
Natural Resources Conservation Service
United States Department of Agriculture

FILE NO.

DRAWING NO.
CO-SSP-56

SHEET 1 OF 2

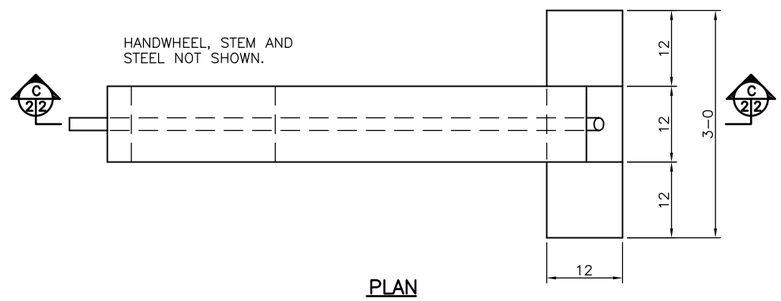

PLAN

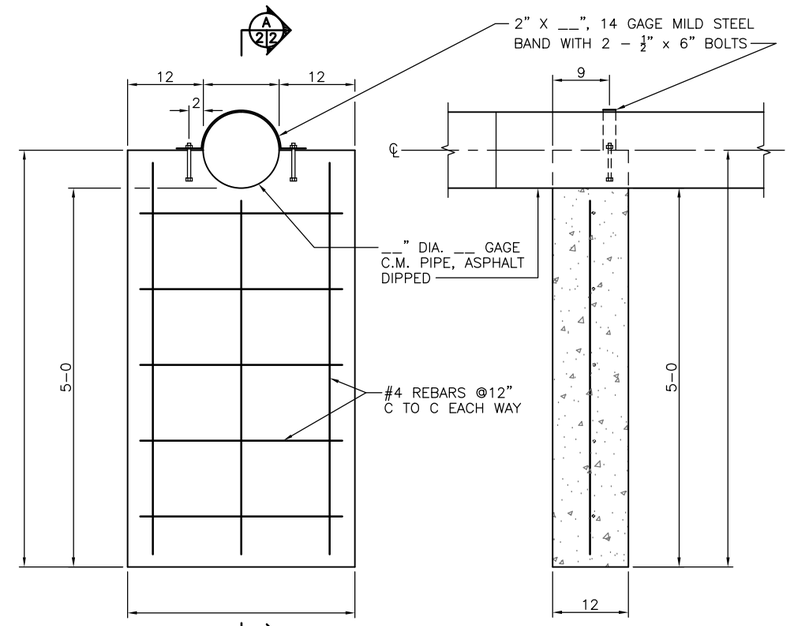

ELEVATION

SECTIONAL ELEVATION A–A

CONCRETE PIPE SUPPORT DETAILS

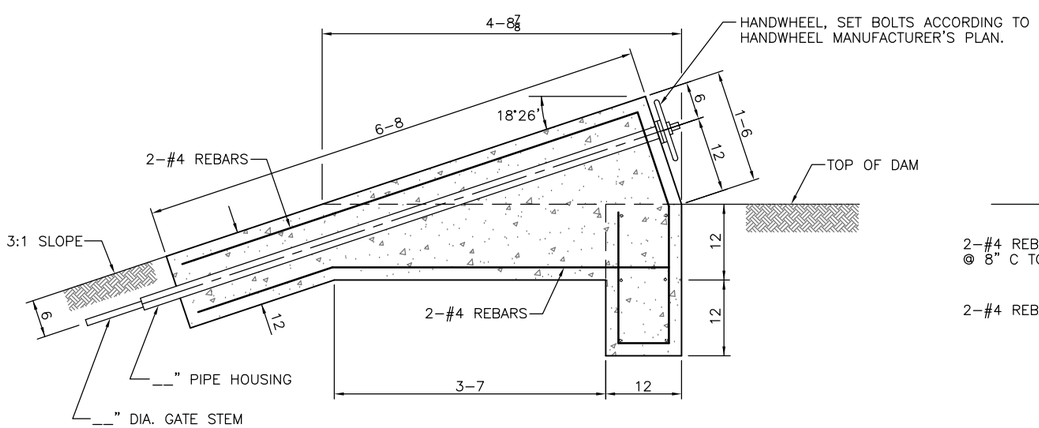

SECTION C–C

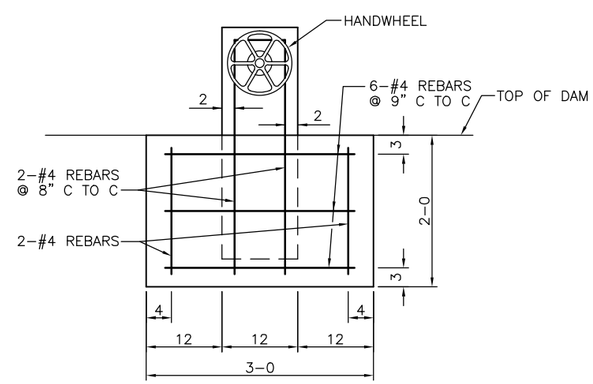

END

DETAILS OF GATE HOIST

RISER TEE DIMENSIONS

RISER DIA. D_3 (IN.)	OUTLET (D_2) OR DRAWDOWN (D_1) IN.	"X OR Y" (IN.)
10	8	2
15	10	2
15	12	3
21	15	3
24	18	4
30	21	4
30	24	6

MINIMUM GAGE OF C.M. PIPE

DIA. OF PIPE (IN.)	AREA OF PIPE (SQ. FT.)	GAGE OF PIPE FOR 0 TO 19 FEET OF FILL HEIGHT
8	0.349	16
10	0.545	16
12	0.785	16
15	1.23	16
18	1.77	16
21	2.41	16
24	3.14	14

CONCRETE VOLUMES

PIPE DIA. D_2 (IN.)	CONCRETE PIPE SUPPORT (C.Y.)	BASE FOR RISER (C.Y.)	PIPE DIA. D_1 (IN.)	INLET STRUCTURE (C.Y.)	GATE HOIST STRUCTURE (C.Y.)	CONC. POSTS (C.Y.–EA.)
8	0.52	0.51	8	0.75	0.56	.056
10	0.56	0.63	10	0.83	0.56	.056
12	0.60	0.63	12	0.92	0.56	.056
15	0.65	0.80	15	1.36	0.56	.056
18	0.71	0.89	18	1.59	0.56	.056
21	0.77	1.08	21	2.20	0.56	.056
24	0.83	1.08	24	2.42	0.56	.056

		DATE
DESIGNED	C.R.H.	06–27–60
DRAWN	D.D.D.	03–30–12
CHECKED		
APPROVED	J.E. ANDREWS, S.C.E.	03–30–12

STOCKWATER DAM WITH SLOPING HEADGATE AND TRICKLE SPILLWAY

8" TO 24" HEADGATE, 3:1 UPSTREAM SLOPE

(REVISED LAST ON 03–12)

NRCS
Natural Resources Conservation Service
United States Department of Agriculture

FILE NO.

DRAWING NO.
CO–SSP–56

SHEET 2 OF 2