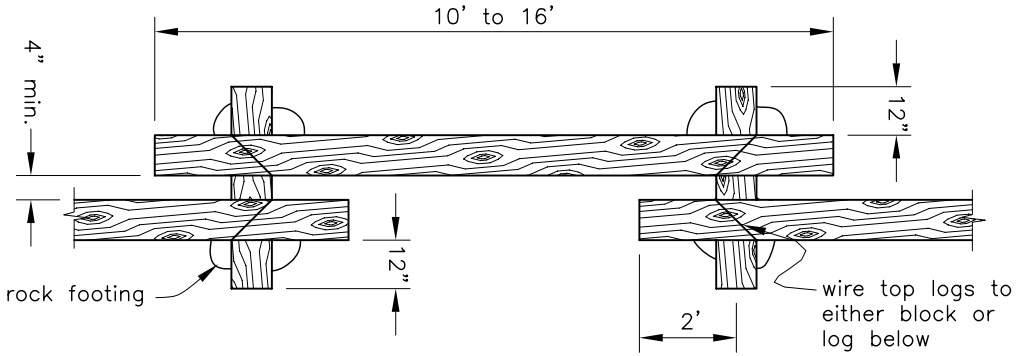

PLAN

Number of logs dependent on size used. Fence shall not be more than 42" high in elk and deer areas.

Smaller logs and blocks to be used only when logs of specified size not available.

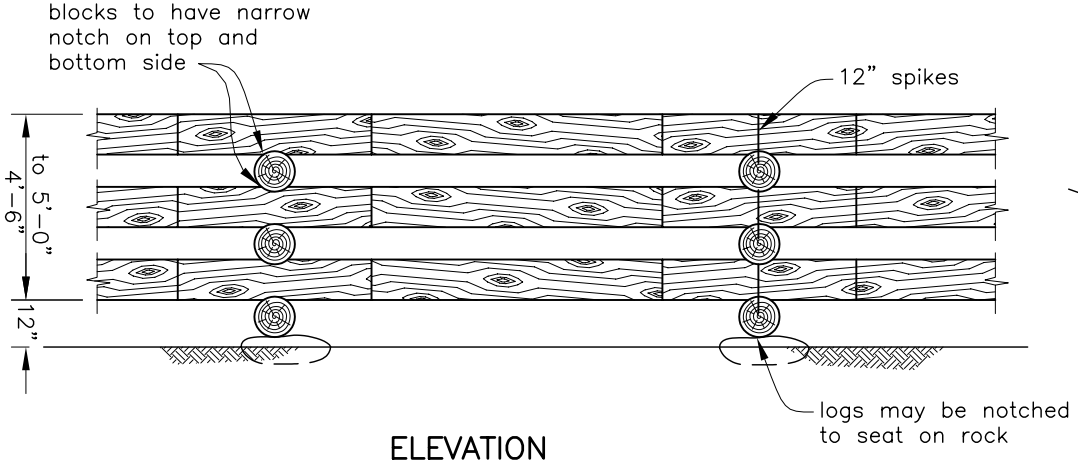

ELEVATION

Logs to be 8"ø at small end.

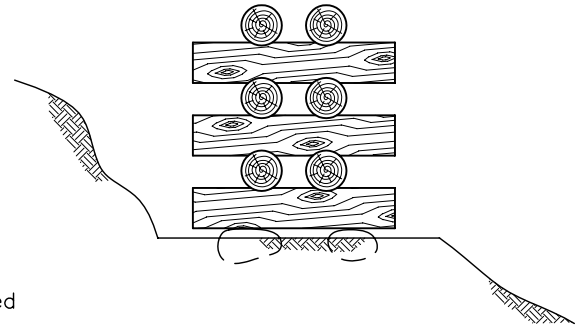

END VIEW

In difficult situations where centers of gravity must be maintained to keep fence from falling down hill, build fence as shown this view.

Drawing not to scale. Standardized drawing must be adapted to the specific site.

JOB CLASS

NRCS
Natural Resources Conservation Service
United States Department of Agriculture

LOG AND BLOCK FENCE

Designed ____ Date ____
Checked ____
Approved ____
Title ____

File Name MTSD382150.DWG
Drawing Name MT-SD-382.150
Sheet ____ of ____

Clear Form

Print Form