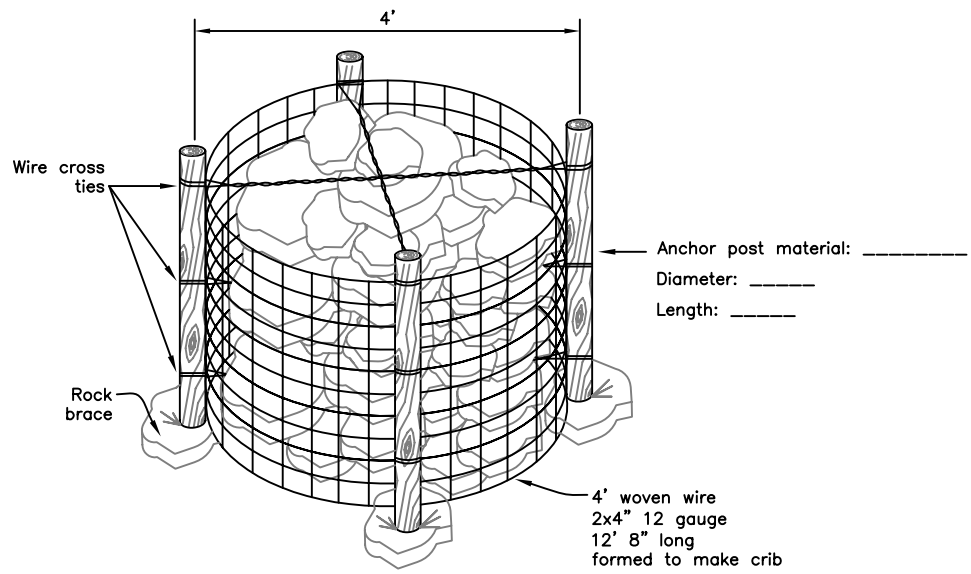

Any direction of pull away from posts

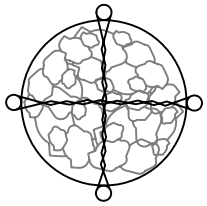

TOP VIEW

ROCK–CRIB BRACE

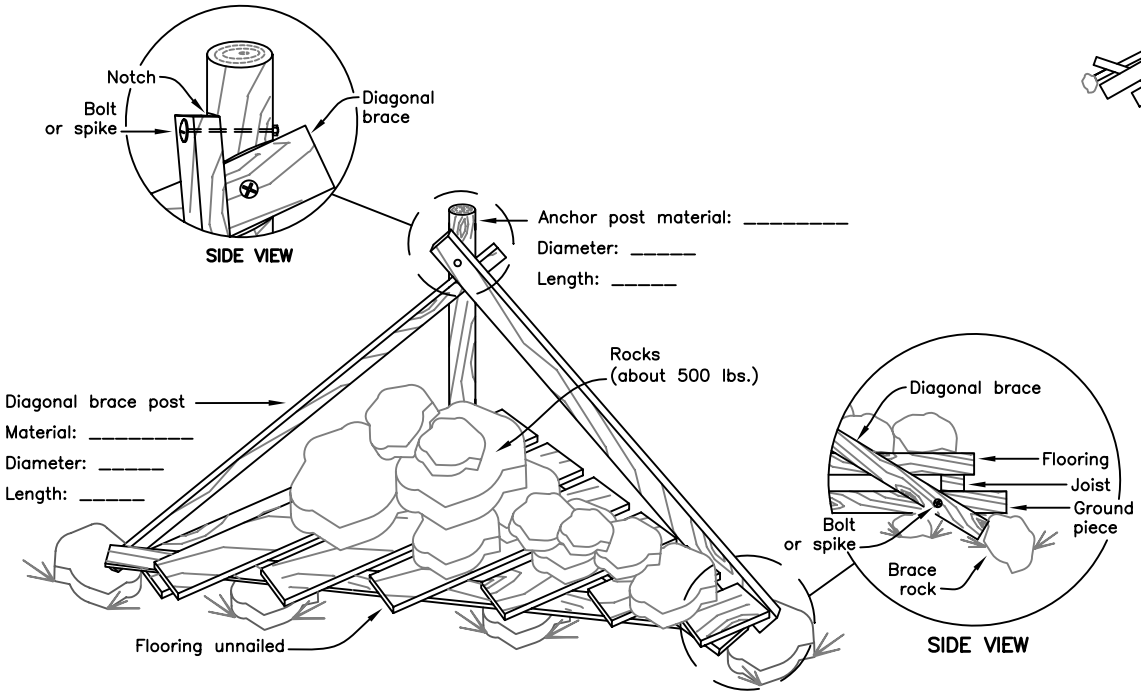

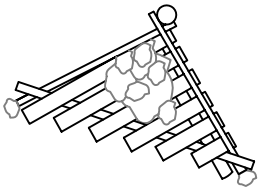

TOP VIEW

ROCK–JACK BRACE

Not to scale

See Sheet 1 for additional materials specifications

Standardized drawing must be adapted to specific site

Job class

NRCS
Natural Resources Conservation Service
United States Department of Agriculture

ROCK BRACE DETAILS

OP: _____

_____ COUNTY MONTANA

DATE:

DESIGNED _____

DRAWN Andrew Malucelli 4/08

CHECKED _____

APPROVED _____

CAD FILE NAME
Rock brace.dwg

DRAWING NO.
MT–SD–382.011

SHEET __ OF __

Clear Drawing

Print Drawing