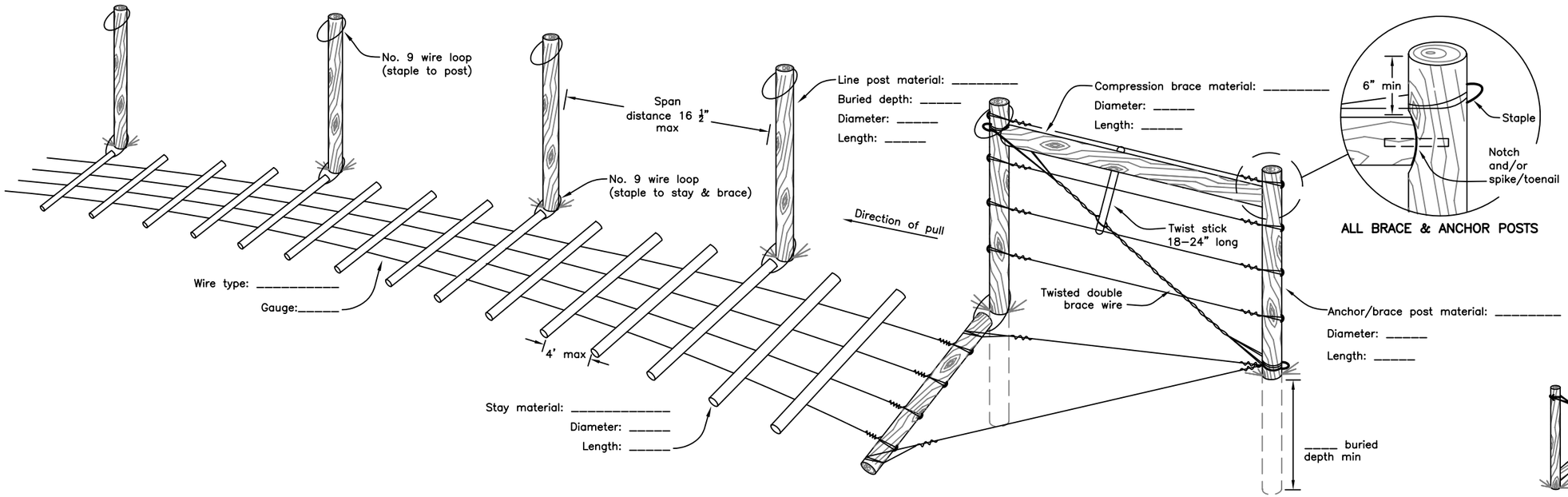

LET DOWN FENCE LINE/END DETAIL

ALL BRACE & ANCHOR POSTS

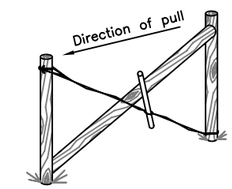

ALTERNATIVE
LINE/END DIAGONAL BRACE

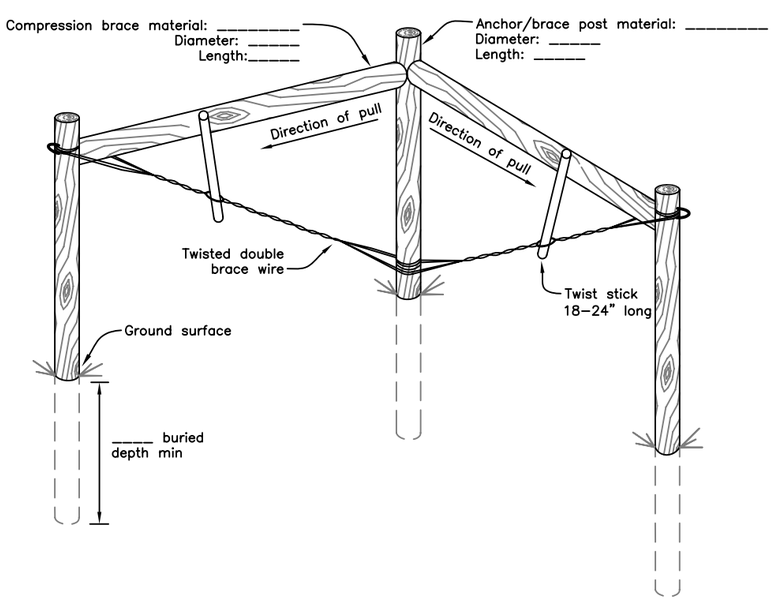

HORIZONTAL CORNER BRACE DETAIL
Corner angle 90° or less

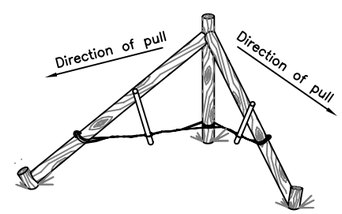

ALTERNATIVE
DIAGONAL CORNER BRACE
Corner angle 90° or less

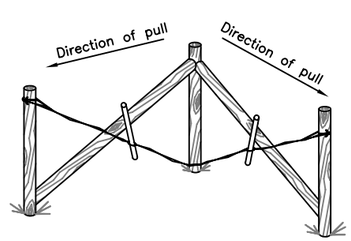

ALTERNATIVE
DIAGONAL CORNER BRACE
Corner angle 90° or less

NOTE: See attached sheet for corner braces greater than 90°.

Fence Design:	Planned	Installed
Fence Height		
Strands		
Wire Spacing (top to bottom)		
Total Length		
Line Posts:		
Material		
Diameter		
Length		
Buried Depth		
Distance Between Posts		
Wire:		
Type		
Gauge		
Number of rolls @_per roll		
Stays:		
Type & Material		
Size or Gauge		
Length & Spacing		
Braces (style):		
Locations		
Material		
Brace Wire Type		
Compression Brace Length		
Compression Brace Diameter		
Anchor/brace Length		
Anchor/brace Diameter		
Anchor/brace Buried Depth		

Notes:

I have reviewed and approve these plans and agree to construct in accordance with them:

owner/operator _____ date _____

Job class

Not to scale. Standardized drawing must be adapted to specific site.

CAD FILE NAME
Let down.dwg

DRAWING NO.
MT–SD–382.007

SHEET ___ OF ___

DATE:

DESIGNED _____

DRAWN Andrew Malucelli 4/08

CHECKED _____

APPROVED _____

4–WIRE LET DOWN FENCE DETAILS

FIELD(S): _____ CIN #: _____

OP: _____ COUNTY _____ MONTANA

NRCS
Natural Resources Conservation Service
United States Department of Agriculture

Print Drawing

Clear Drawing