SYNTHETIC WATER BAR (FLAPPER)

MT–EWP–123B

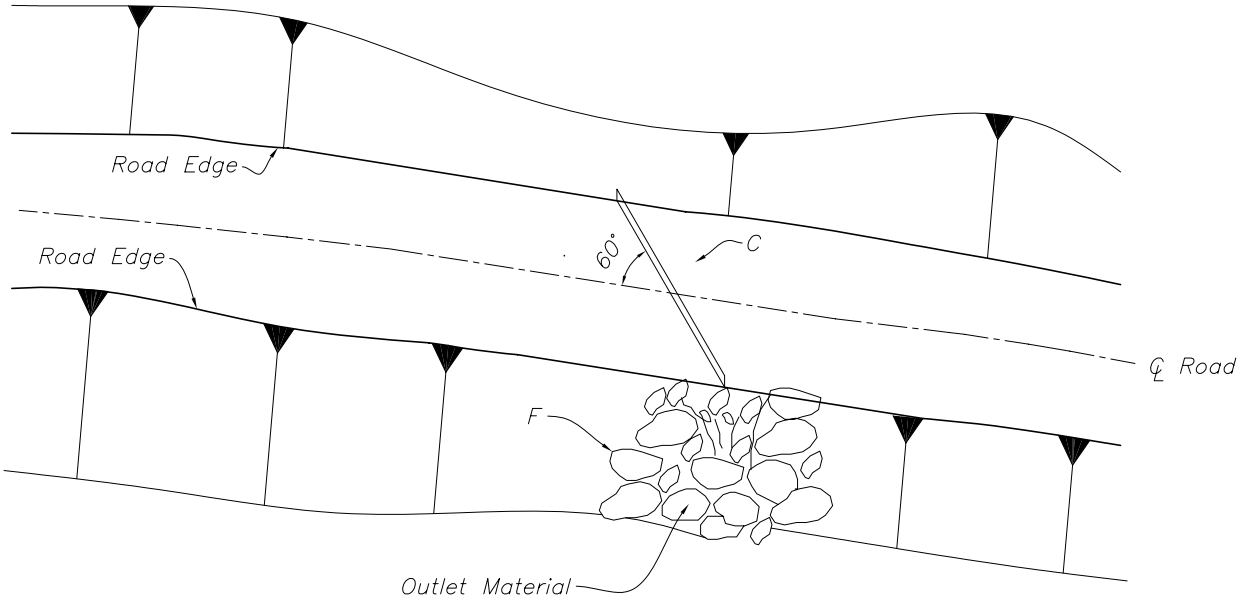

PLAN VIEW

Outlet Material
Yes _____ No _____
Materials _____
Thickness _____
Dimensions _____

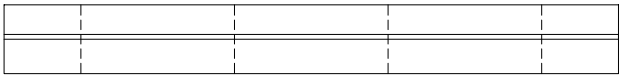

PLAN VIEW

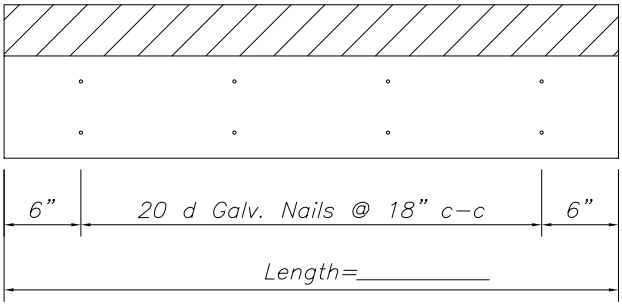

ELEVATION VIEW

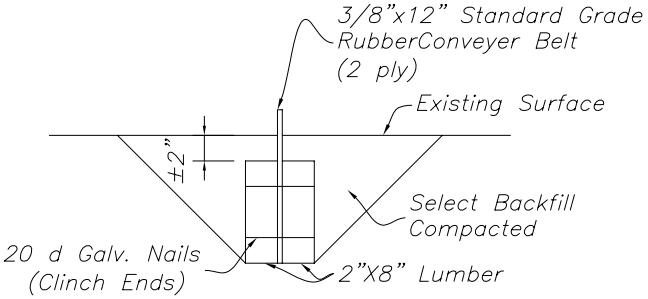

SYNTHTIC WATER BAR SECTION

Notes:
1. All lumber shall be No 2 or better rough cut Douglas fir or Western larch.

Not to scale

COOPERATOR _____	DESIGNED _____ DATE _____	APPROVED _____
COUNTY _____	DRAWN _____ DATE _____	TITLE _____
JOB CLASS _____	REVISED _____ DATE _____	_____
SHEET ____ OF ____ REVISED 9/00	CHECKED _____ DATE _____	TITLE _____

USDA NRCS U.S. DEPARTMENT OF AGRICULTURE NATURAL RESOURCES CONSERVATION SERVICE