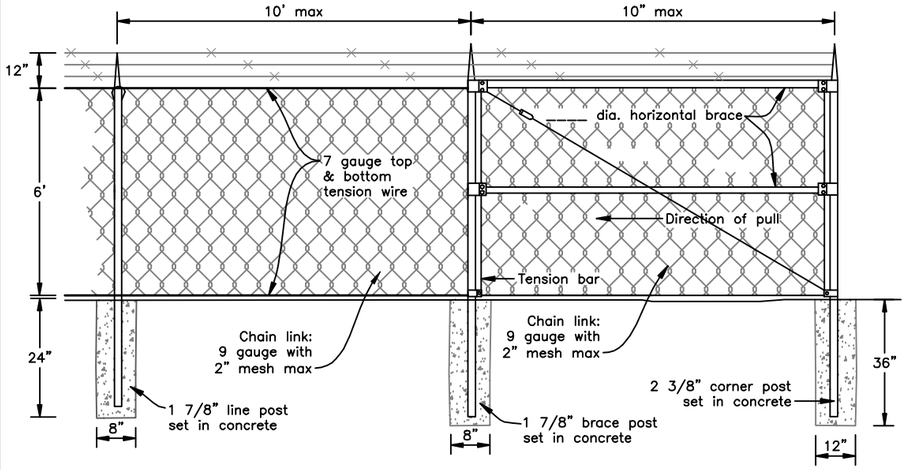

LINE & CORNER OR END BRACE DETAIL

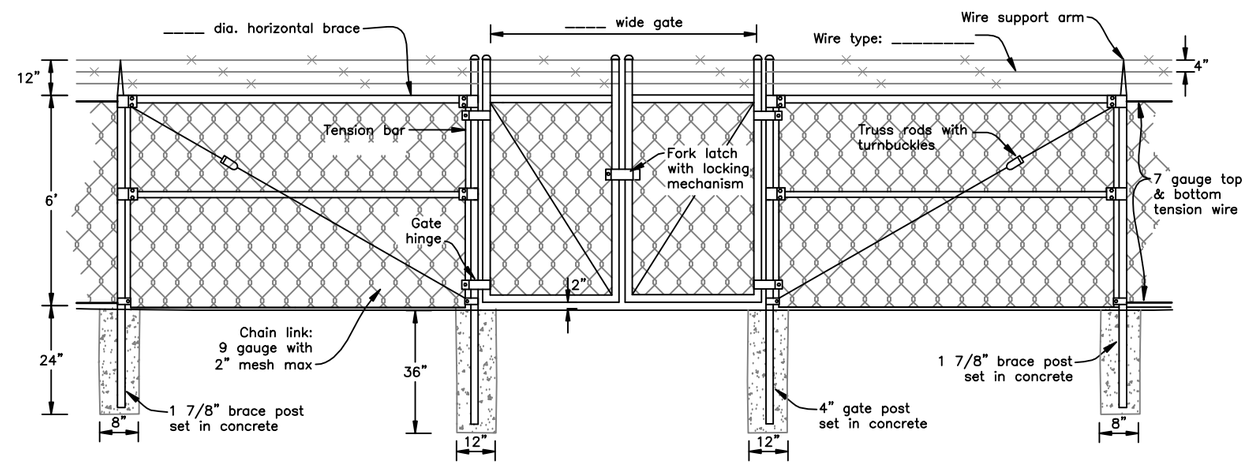

DOUBLE LEAF GATE DETAIL

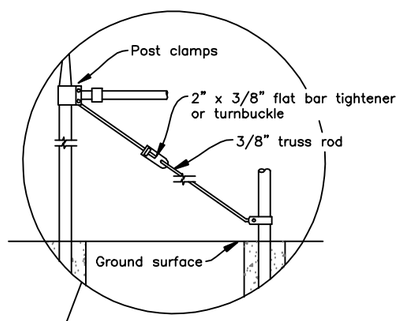

TRUSS ROD DETAIL

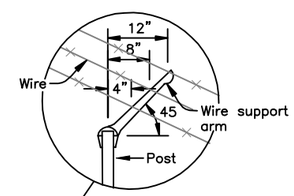

3 STRAND WIRE DETAIL

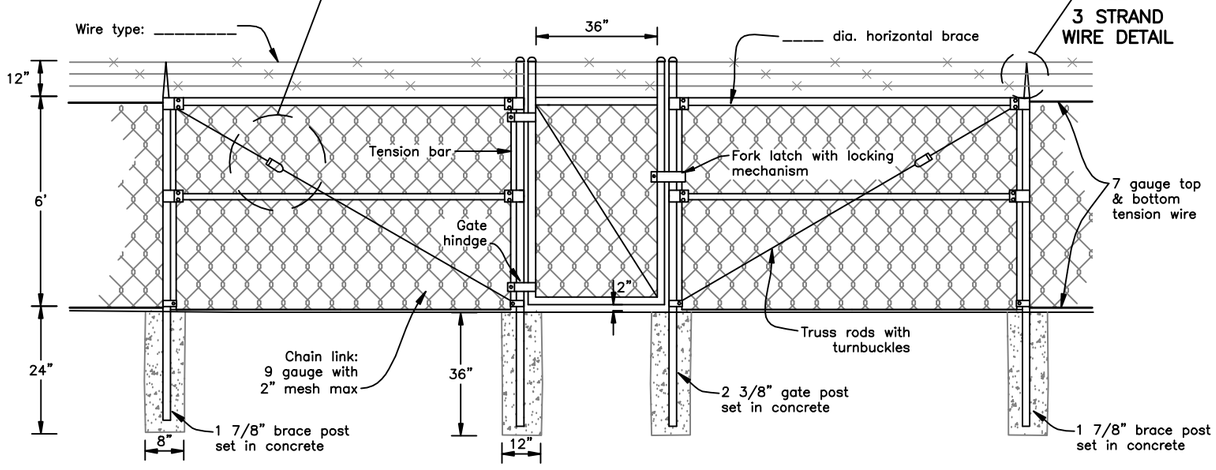

SINGLE LEAF GATE DETAIL

Fence Design:	Planned			Installed		
Total Length						
Line Posts:						
Number of Line Posts						
Buried Depth						
Distance Between Posts						
Posts:	Corner	Gate	Brace	Corner	Gate	Brace
Number of:						
Walk Through Gate Post Size						
Equipment Gate Post Size						
Corner & Brace Post Size		XXXX			XXXX	
Buried Depth:						
Horizontal Brace length/size						
Cubic Yards of Concrete						
Wire:						
Mesh wire size						
Mesh wire gauge						
Tension wire length						
Number of turnbuckles						
Number of truss rods						
Top Wire(s):						
Type						
Gauge						
Number of rolls @___per roll						
Number of Support Arms						

Notes:

Not to scale.

Standardized drawing must be adapted to specific site.

I have reviewed and approve these plans and agree to construct in accordance with them:

_____ owner/operator date _____ Job class

CAD FILE NAME Chain Link.dwg

DRAWING NO. MT-382-38

SHEET ___ OF ___

DATE:

DESIGNED _____

DRAWN Andrew Malucelli 3/09

CHECKED _____

APPROVED _____

CHAIN LINK FENCE DETAILS

CIN #: _____

FIELD(S): _____

OP: _____ COUNTY

MONTANA

NRCS Natural Resources Conservation Service United States Department of Agriculture

Print Drawing

Clear Drawing