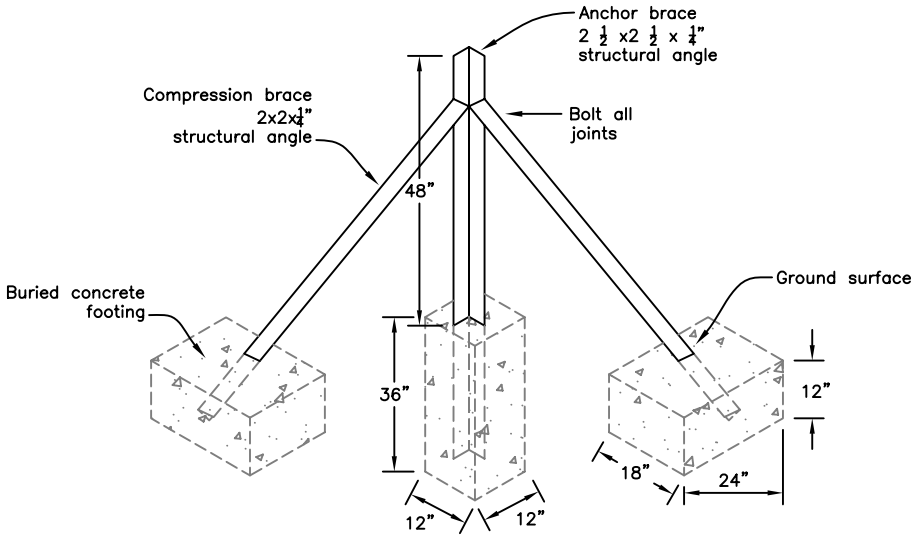

ANGLE IRON CORNER/INLINE BRACE

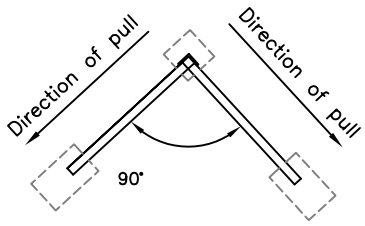

TOP VIEW
CORNER

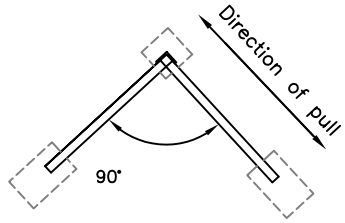

TOP VIEW
INLINE

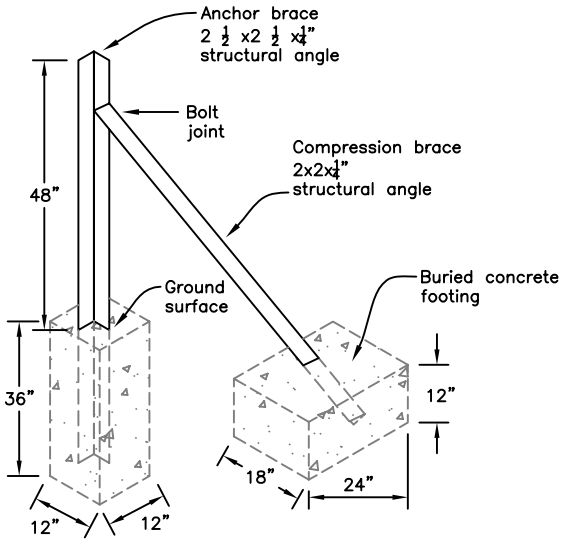

ANGLE IRON END BRACE

Not to scale

See Sheet 1 for additional materials specifications

Standardized drawing must be adapted to specific site

Job class _____

NRCS
Natural Resources Conservation Service
United States Department of Agriculture

ANGLE IRON BRACE DETAILS

OP: _____

_____ *COUNTY* *MONTANA*

DATE:

DESIGNED _____

DRAWN Andrew Malucelli 4/08

CHECKED _____

APPROVED _____

CAD FILE NAME
Angle iron.dwg

DRAWING NO.
MT–SD–382.013

SHEET ___ OF ___

Clear Drawing

Print Drawing