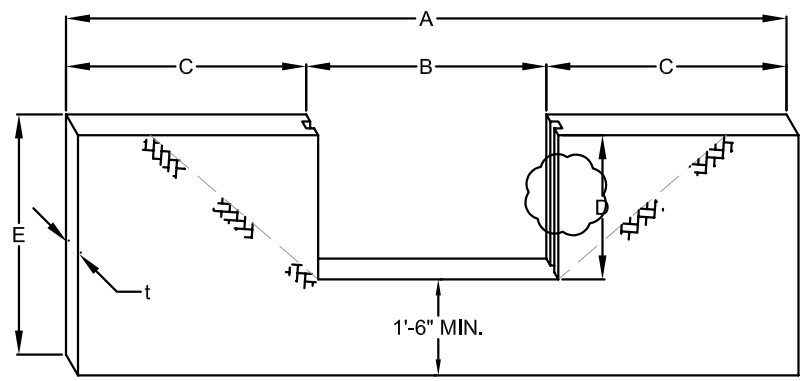

ELEVATION

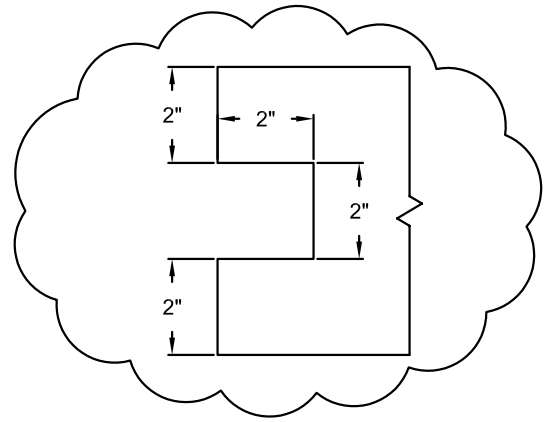

FLASH BOARD
NOTCH DETAIL

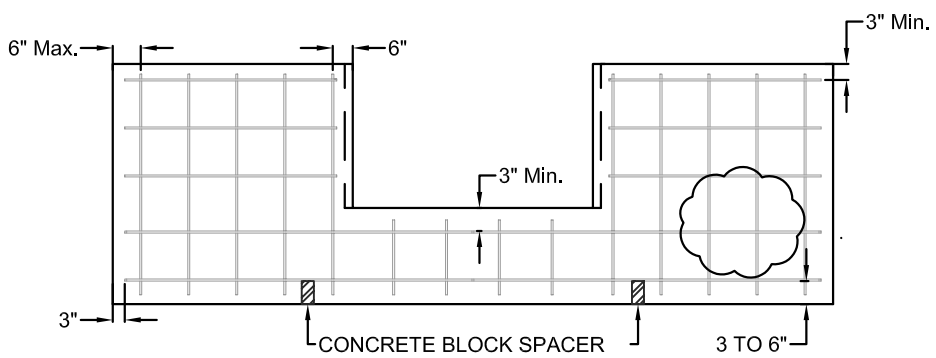

REINFORCING STEEL LAYOUT

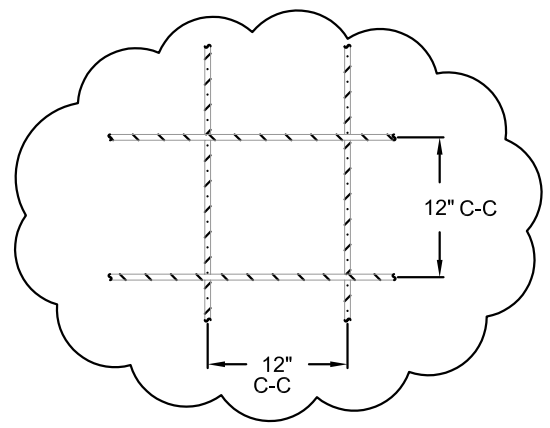

REINFORCING GRID
DETAIL

Notes:

1. Construct structures in accordance with Nevada NRCS Specifications NV-32 Reinforced Concrete for Minor Structures, NV-21 Excavation, and NV-23 Earthfill.
2. Place bottom of notch a minimum of 3 inches below the field grade for border turnouts, and level with ditch bottom for cross checks.
3. Riprap or concrete pave scour hole downstream of outlet structures that may develop in soils prone to erosion.
4. Cross check structures shall extend a minimum of 1.5 feet into the bank on both sides.
5. Cross check opening width should be equal to the ditch bottom width.
6. Structures shall have the same thickness from the opening to each end.
7. Reinforcing steel is #4 (1/2" diameter) at a maximum spacing of 12" (or equivalent) in both directions.
8. Vertical rebar in the headwalls must be a single length from the bottom horizontal bar to the top horizontal bar in the headwall.
9. All reinforcing steel is to be placed in the center of the section.
10. The horizontal reinforcing bars may be placed when a lift of concrete has been placed.

Ditch Check / Border Turnout Structure

Dimensions, Capacities, Quantities

Selected Size	B	D	C	E	A	Max	Concrete Vol. t=6"	Reinf. Steel	Reinf. Steel	Weight
	Minimum									
	Ft. - In.					CFS	Cu. yd.	lbs.	Ft.	lbs.
	1-6	1-6	3-0	3-0	7-6	4.5	0.4	27	40	1550
	1-6	2-6	3-9	4-0	9-0	12.5	0.6	43	64	1775
	2-0	1-6	3-0	3-0	8-0	6	0.4	28	42	1600
	2-0	2-0	3-6	3-6	9-0	11	0.5	37	55	2462
	2-6	1-6	3-0	3-0	8-6	7.5	0.4	29	43	1660
	2-6	2-0	3-6	3-6	9-6	13.5	0.5	40	60	2160
	2-6	2-6	4-0	4-6	10-6	21	0.8	55	82	2730
	3-0	1-6	3-0	3-0	9-0	9	0.4	30	45	1720
	3-0	2-0	3-6	3-6	10-0	16.5	0.5	39	58	2210
	3-0	2-6	3-0	4-6	10-0	25.5	0.8	34	51	1950
	3-0	3-0	5-0	5-0	13-0	36	1.0	75	112	4280
	3-6	2-0	3-6	3-6	10-6	19	0.6	40	60	2270
	3-6	2-0	3-9	3-8	11-0	19	0.6	44	66	2544
	4-0	2-0	3-6	3-6	11-0	22	0.6	41	61	2330
	4-0	2-6	4-0	4-6	12-0	34	0.8	59	88	2900
	4-0	3-0	4-6	5-0	13-0	48	1.0	62	93	3550
	5-0	2-0	3-6	3-6	12-0	27.5	0.6	43	64	2440
	5-0	2-6	4-0	4-6	13-0	42.5	0.9	53	79	3020
	5-0	3-0	4-6	5-0	14-0	60	1.0	64	96	3660
	5-0	3-0	5-0	5-0	15-0	60	1.1	80	120	4580
	5-0	3-6	5-6	5-6	16-0	80	1.3	94	141	5380
	5-0	4-0	6-6	6-0	18-0	100	1.6	129	193	7400
	6-0	2-6	4-0	4-6	14-0	51	0.9	55	82	3130
	6-0	3-0	5-0	5-0	16-0	72	1.1	83	124	4730
	6-0	3-6	5-6	5-6	17-0	96	1.3	97	145	5530
	6-0	4-0	6-6	6-0	19-0	120	1.7	133	199	7600

Indicate the selected design with "X" in the first column.

To compute the concrete volume and weight:
For a structure with width of t=5.5" multiply the listed concrete volume/weight by 0.917
For a structure with width of t=8" multiply by 1.333

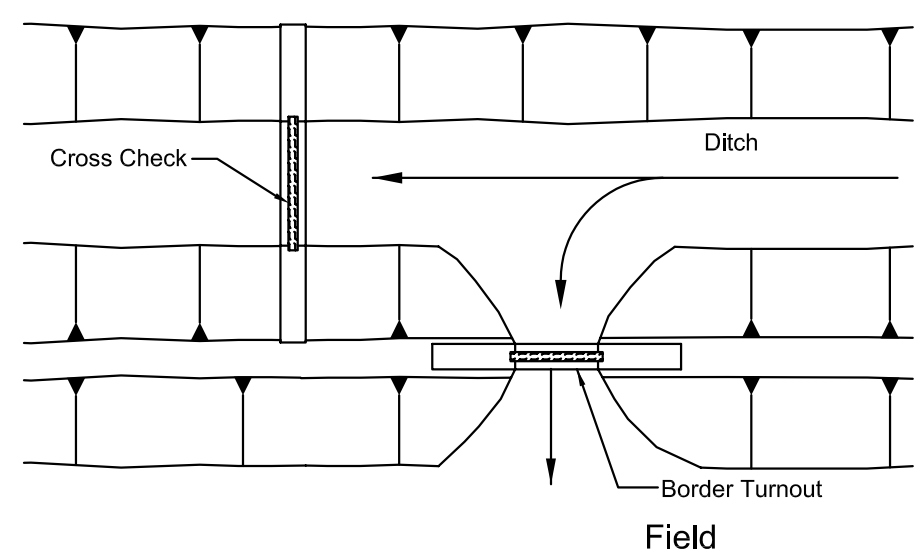

11. Each lift of concrete shall be penetrated multiple times with a steel rod. The rod shall penetrate the lower layer to ensure consolidation and remove air pockets.
12. Forms shall stay in place for a minimum of three days.

		Date
Designed	MBT	04/06
Drawn	JRS	04/06
Checked	MBT	05/06
Approved		05/07

JOB CODE: 587 Ditch Check / Border Turnout Structure

STANDARD DRAWING NV-1

RENO, NEVADA

NRCS
Natural Resources Conservation Service
United States Department of Agriculture

FILE NAME
CHECK STRUCT.DWG

DRAWING NUMBER
SD NV-1

Sheet 1 of 1