WASHINGTON STANDARD DRAWING	BIOENGINEERING BANK PROTECTION VEE–LOG WEIR	STANDARD DRAWING NO. BIO–0054 APPROVED BY: LAJ DRAWN BY: KLY ISSUE DATE: 2/99

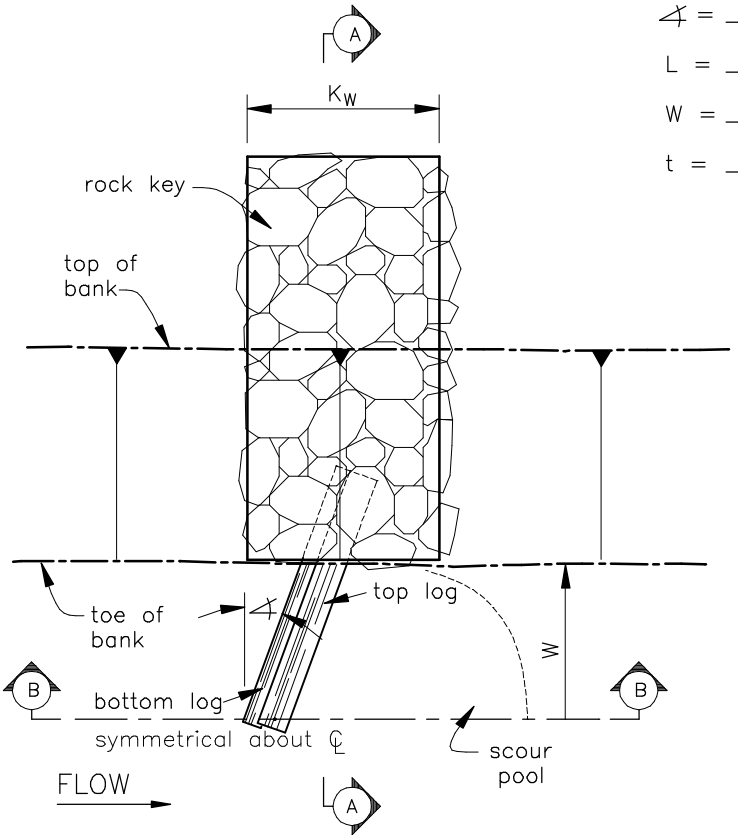

PLAN VIEW

DIMENSIONS

∡ = _____ (deg) elev A _____

L = _____ (ft) K_D = _____ (ft)

W = _____ (ft) K_W = _____ (ft)

t = _____ (ft) X = _____

ROCK KEY GRADATION

D_{100} = _____ min (in) _____ max (in)

D_{75} = _____ min (in) _____ max (in)

D_{50} = _____ min (in) _____ max (in)

D_{min} = _____ min (in) _____ max (in)

LOG DIMENSIONS

Species _____

TOP LOG (2 req'd)

Length (ea) _____ min (ft) _____ max (ft)

L_E (embedded) _____ min (ft) _____ max (ft)

Dia. = _____ min (in) _____ max (in)

BOTTOM LOG (2 req'd)

Length (ea) _____ min (ft) _____ max (ft)

L_E (embedded) _____ min (ft) _____ max (ft)

Dia. = _____ min (in) _____ max (in)

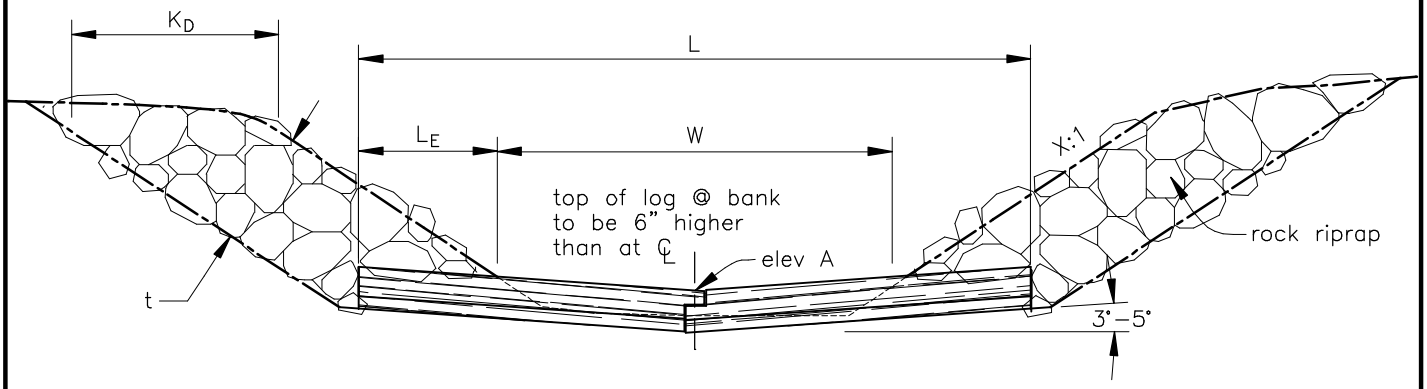

SECTION Ⓐ

drawing not to scale

	JOB CLASS	Designed	Date
	CAD FILE NO. sht 1 of 2 BIO–0054.DWG	Drawn	
	SHEET OF	Checked	
U.S.D.A. NATURAL RESOURCES CONSERVATION SERVICE		Approved	

WASHINGTON STANDARD DRAWING	BIOENGINEERING BANK PROTECTION VEE–LOG WEIR	STANDARD DRAWING NO. BIO–0054 APPROVED BY: LAJ DRAWN BY: KLY ISSUE DATE: 2/99

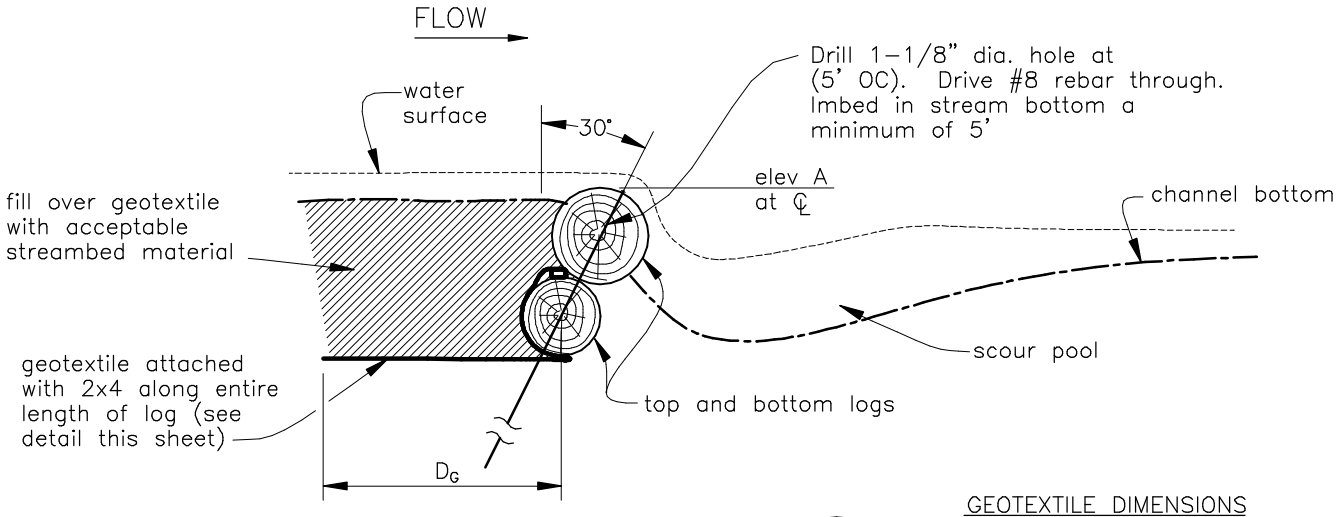

SECTION (B)

GEOTEXTILE DIMENSIONS

D_G = _____ (ft)

CONCRETE BALLAST

Size = ____ X ____ X ____

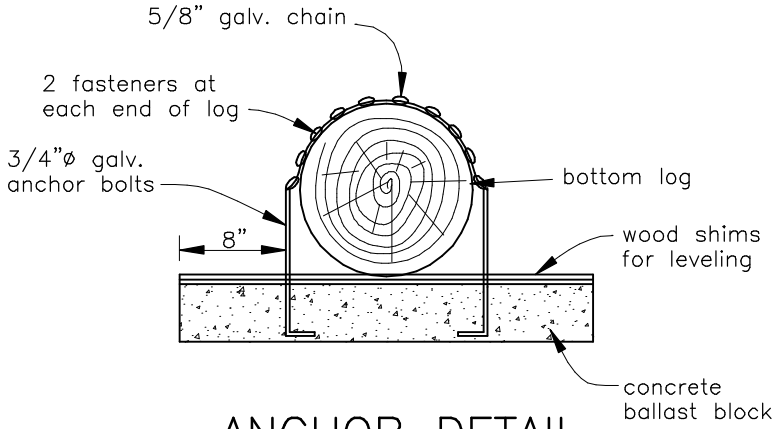

ANCHOR DETAIL

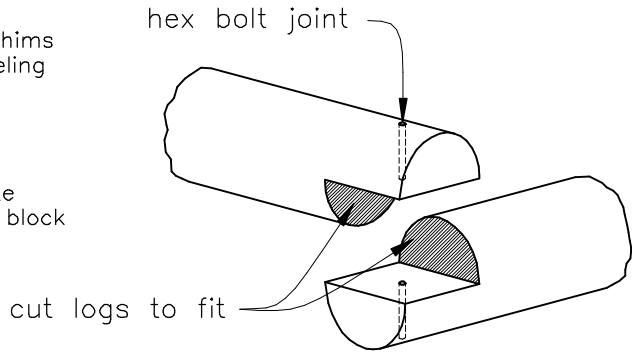

Tie log ends down to hardware on pre–cast and cured concrete block at apex of v–weir

DETAIL

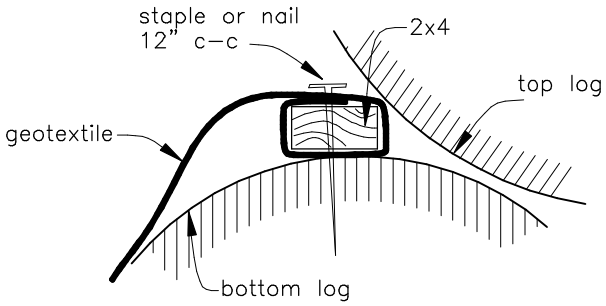

ATTACHMENT DETAIL

GENERAL NOTES

1. This standard drawing requires supporting technical documentation prior to use and must be adapted to the specific site.

drawing not to scale

	JOB CLASS	Designed ____ Date
	CAD FILE NO. sht 2 of 2 BIO–0054.DWG	Drawn ____
	SHEET OF	Checked ____
U.S.D.A. NATURAL RESOURCES CONSERVATION SERVICE		Approved ____