WASHINGTON STANDARD DRAWING	LIVESTOCK FACILITIES CHAIN LINK FENCE GATES	STANDARD DRAWING NO. LSK–0050 APPROVED BY: GBR DRAWN BY: KLY ISSUE DATE: 4/00

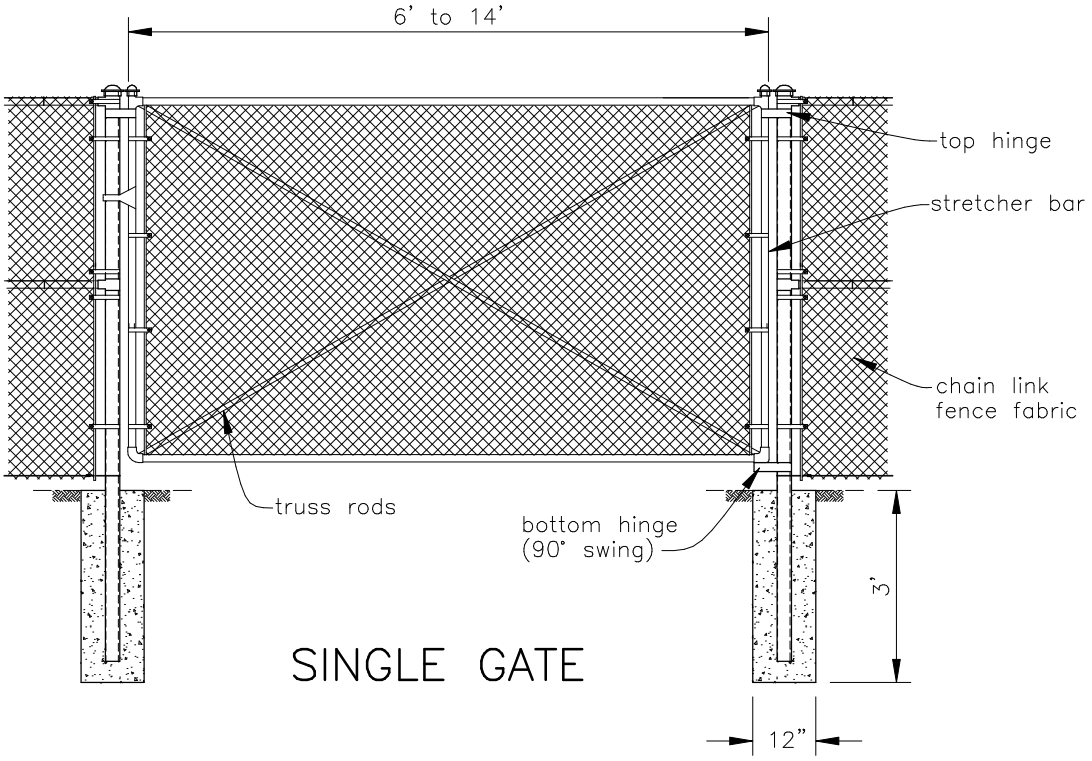

SINGLE GATE

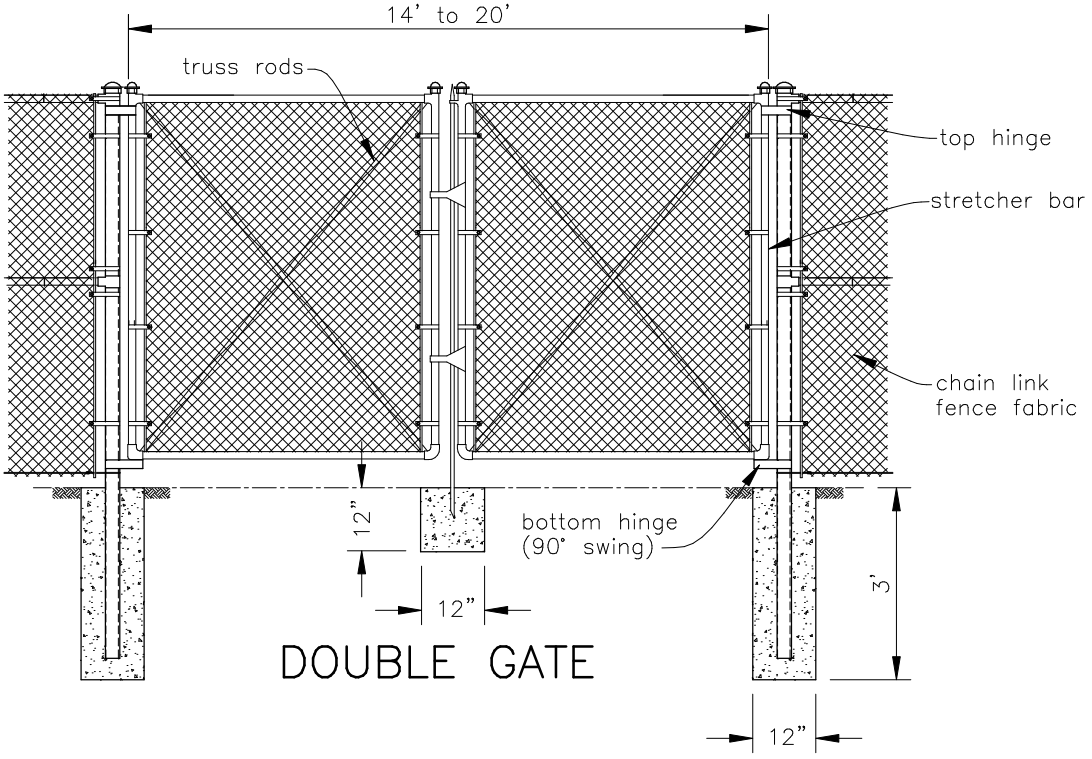

DOUBLE GATE

Drawing not to scale. Standardized drawing must be adapted to the specific site.

	JOB CLASS	Date
	CAD FILE NO. LSK–0050.DWG	Designed _____ _____
	SHEET OF	Drawn _____ _____
		Checked _____ _____
U.S.D.A. NATURAL RESOURCES CONSERVATION SERVICE		Approved _____ _____