WASHINGTON STANDARD DRAWING	SPRINKLER IRRIGATION **RELIEF VALVES**	STANDARD DRAWING NO. **SPR–0011** APPROVED BY: LAJ DRAWN BY: KLY ISSUE DATE: 5/01

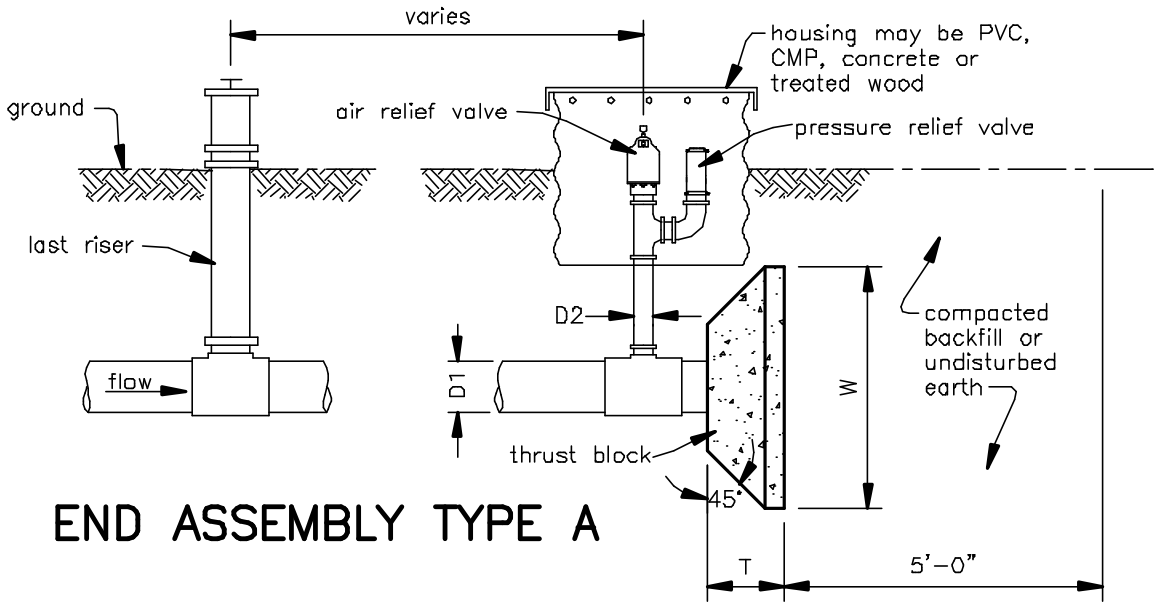

END ASSEMBLY TYPE A

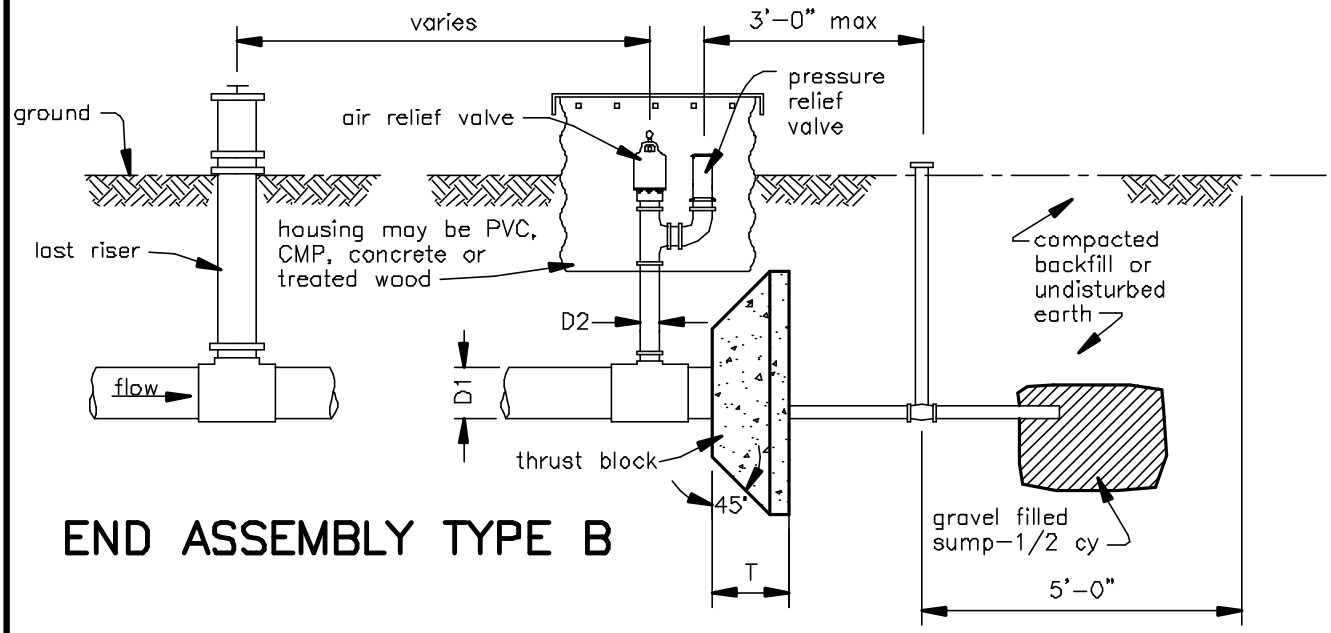

END ASSEMBLY TYPE B

DIMENSIONS

D1 = _____ (in)

D2 = _____ (in)

T = _____ (in)

W = _____ (ft)

Type _____

Riser shall be class 160 psi plastic pipe with threaded adapters or be schedule 40 galvanized steel pipe.

Air relief valve dia. _____ (in)

Pressure rating _____ (psi)

Pressure relief valve dia. _____ (in)

Pressure rating _____ (psi)

NOTE:
This standard drawing requires supporting technical documentation prior to use and must be adapted to the specific site.

Drawing not to scale.

	JOB CLASS		Date
	CAD FILE NO. SPR–0011.DWG	Designed	
		Drawn	
	SHEET OF	Checked	
U.S.D.A. NATURAL RESOURCES CONSERVATION SERVICE		Approved	