WASHINGTON STANDARD DRAWING	DRAINAGE **PIPE INLET STRUCTURE**	STANDARD DRAWING NO. **DRN–0055** APPROVED BY: LAJ DRAWN BY: KLY ISSUE DATE: 5/01

DIMENSIONS

A (dia) _____ (in)

A pipe type _____

B (dia) _____ (in)

G_1 = _____ (ft) _____ (in)

G_2 = _____ (ft) _____ (in)

H = _____ (ft) _____ (in)

D = _____ (ft) _____ (in)

W = _____ (ft) _____ (in)

L = _____ (ft) _____ (in)

S = _____ (ft) _____ (in)

T = _____ (ft) _____ (in)

F = _____ (ft) _____ (in)

C = _____ (ft) _____ (in)

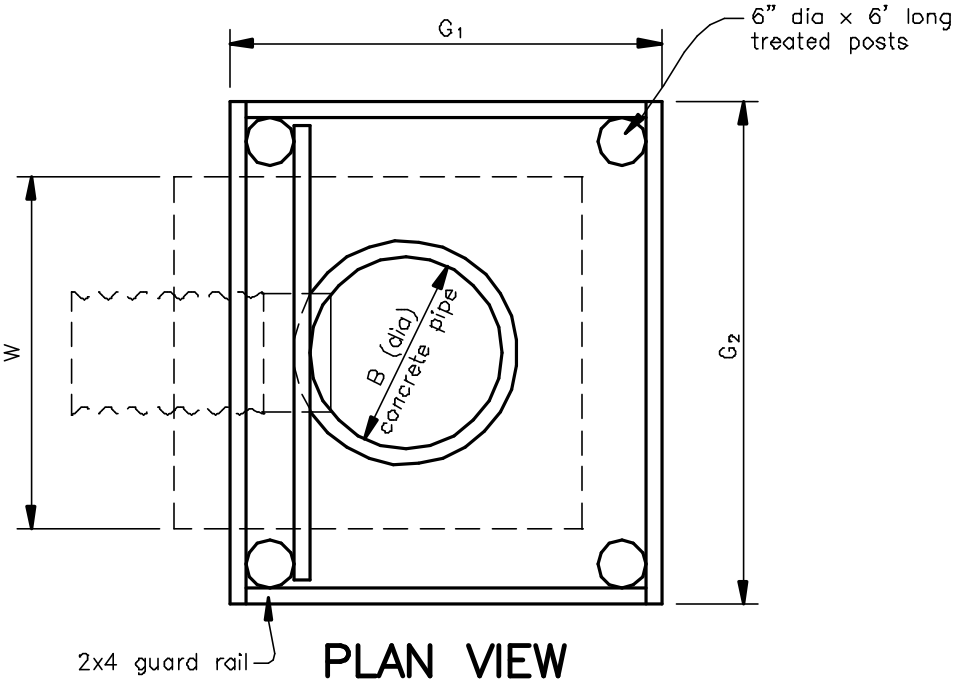

PLAN VIEW

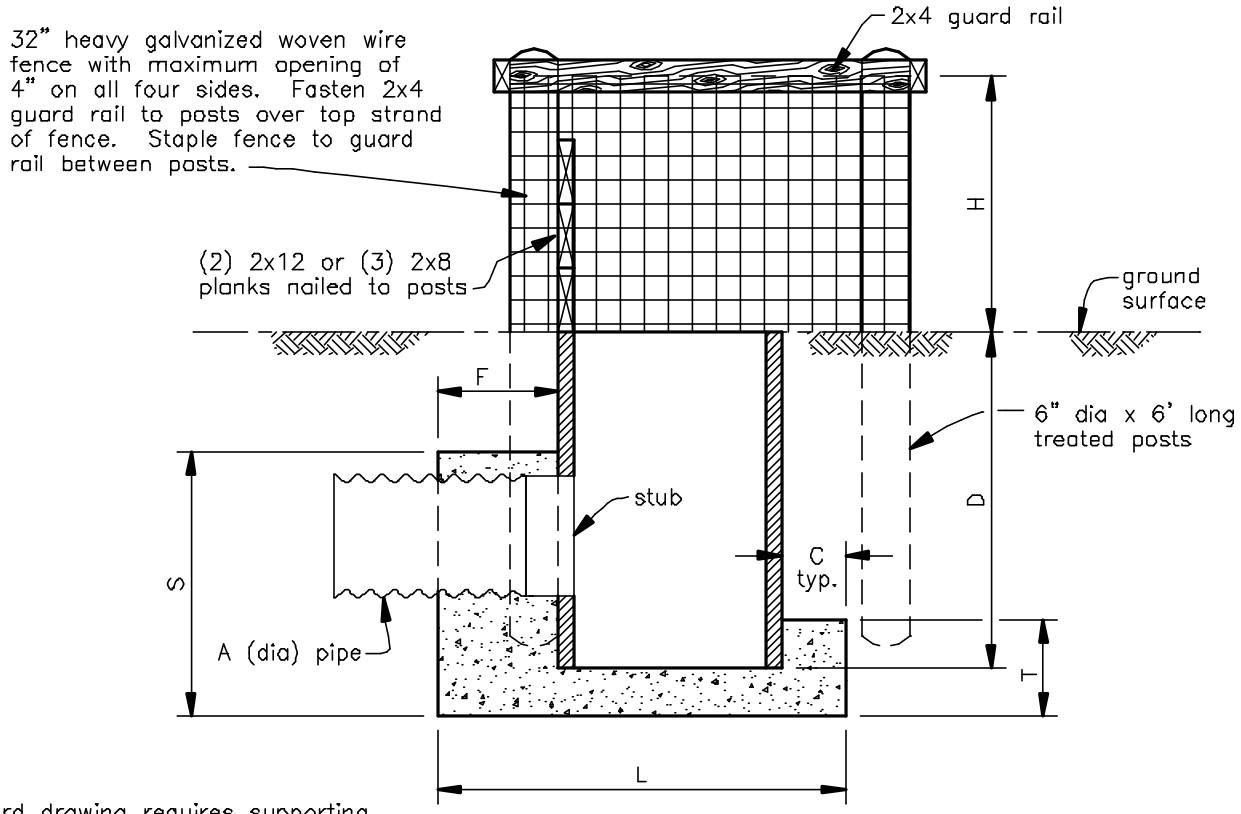

SECTION VIEW

NOTE:
This standard drawing requires supporting technical documentation prior to use and must be adapted to the specific site.

Drawing not to scale.

	JOB CLASS		Date
	CAD FILE NO. DRN–0055.DWG	Designed	
		Drawn	
	SHEET OF	Checked	
U.S.D.A. NATURAL RESOURCES CONSERVATION SERVICE		Approved	