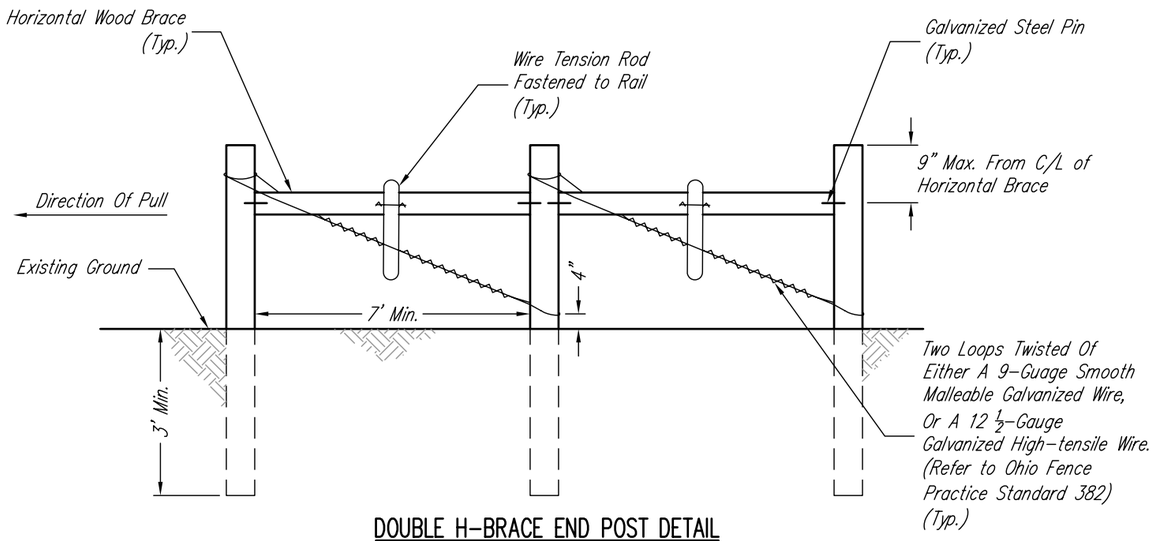

DOUBLE H-BRACE END POST DETAIL

Not to Scale

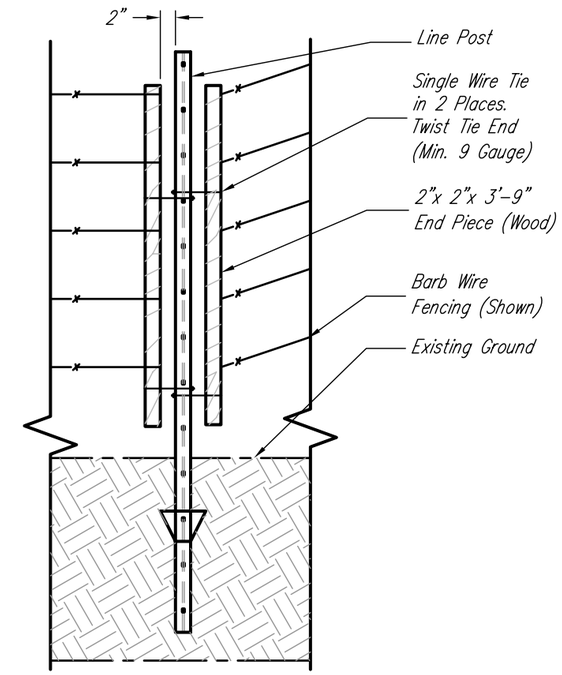

BREAK AWAY END DETAIL

Not to Scale

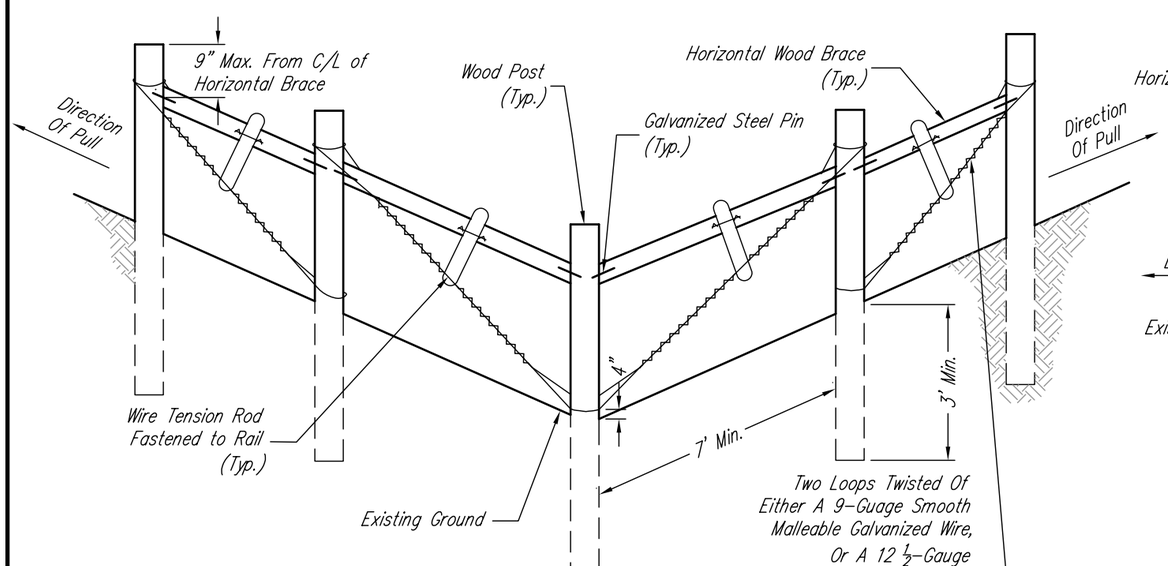

DOUBLE H-BRACE CORNER DETAIL

Not to Scale

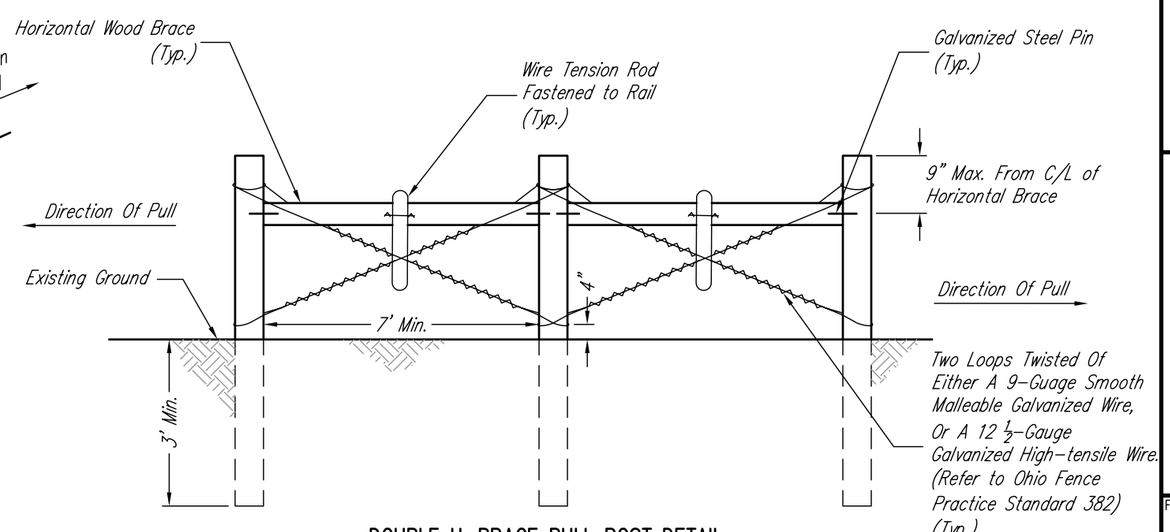

DOUBLE H-BRACE PULL POST DETAIL

Not to Scale

		Date
Designed	K Rowe	12/05
Drawn	Michael E. Hammitt	1/06
Checked		
Approved		

CLIENT: _____ County _____ Ohio

Ohio Double H-Brace Fence Details

Page 1 of 1

NRCS
Natural Resources Conservation Service
United States Department of Agriculture

File No. OH070906.dwg

Drawing No. OH-N-709-CAD

Sheet of