# ANTI-VORTEX-TRASH AND SAFETY GUARD

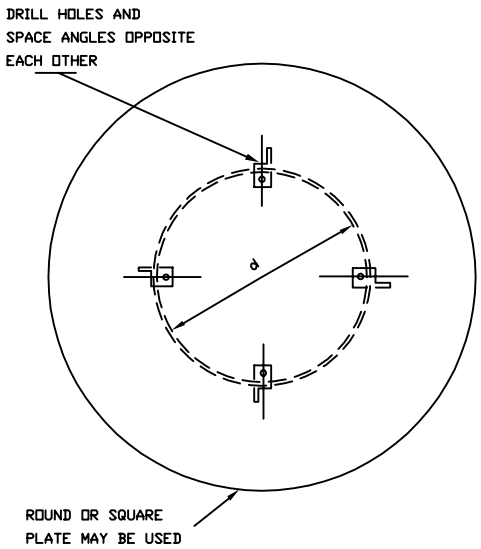


PLAN

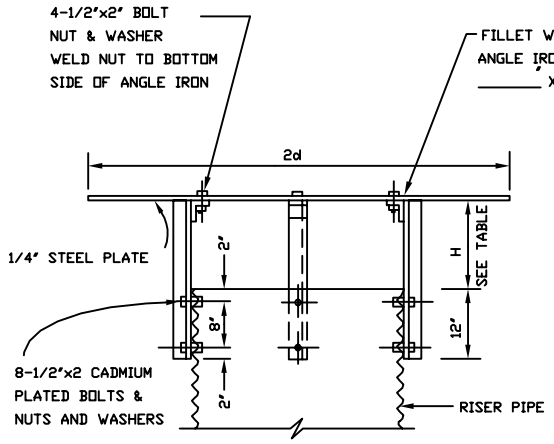


SECTION AT CENTER

| INLET d DIA. INCHES | BARREL DIA. INCHES | H INCHES |
|---|---|---|
| 12 | 6 | 6 |
| 12 | 8 | 6 |
| 15 | 10 | 6 |
| 15 | 12 | 7 |
| 18 | 12 | 6 |
| 24 | 15 | 7 1/2 |
| 24 | 18 | 10 |
| * 30 | 18 | 8 1/2 |
| * 30 | 24 | 13 1/2 |
| * 36 | 24 | 12 |

* USE ANGLE IRON STIFFENERS ON PLATE AS SPECIFIED.

STANDARD DRAWING NO.: RTSC-NE-ENG-634-CAD
APPROVAL DATE: 1972

REVISIONS:

U.S. DEPARTMENT OF AGRICULTURE
SOIL CONSERVATION SERVICE

Designed _____ Date _____
Drawn _____ _____
Traced _____ _____
Checked _____ _____

Approved by _____
Title _____
Title _____
Sheet No. _____ of _____
Drawing No.

Description: ANTI-VORTEX TRASH AND SAFETY GUARD

Filename: OHRTS634.DWG